PN512

Transmission module

Rev. 4.3 — 7 May 2013
111343

Product data sheet
COMPANY PUBLIC

1. Introduction

This document describes the functionality and electrical specifications of the transceiver IC PN512.

The PN512 is a highly integrated transceiver IC for contactless communication at 13.56 MHz. This transceiver IC utilizes an outstanding modulation and demodulation concept completely integrated for different kinds of contactless communication methods and protocols at 13.56 MHz.

1.1 Different available versions

The PN512 is available in three versions:

- PN5120A0HN1/C2 (HVQFN32), PN5120A0HN/C2 (HVQFN40) and PN5120A0ET/C2 (TFBGA64), hereafter named as version 2.0
- PN512AA0HN1/C2 (HVQFN32) and PN512AA0HN1/C2BI (HVQFN32 with Burn In), hereafter named as industrial version, fulfilling the automotive qualification stated in AEC-Q100 grad 3 from the Automotive Electronics Council, defining the critical stress test qualification for automotive integrated circuits (ICs).
- PN5120A0HN1/C1(HVQFN32) and PN5120A0HN/C1 (HVQFN40), hereafter named as version 1.0

The data sheet describes the functionality for the industrial version and version 2.0. The differences of the version 1.0 to the version 2.0 are summarized in Section 21. The industrial version has only differences within the outlined characteristics and limitations.

2. General description

The PN512 transceiver ICs support 4 different operating modes

- Reader/Writer mode supporting ISO/IEC 14443A/MIFARE and FeliCa scheme
- Reader/Writer mode supporting ISO/IEC 14443B
- Card Operation mode supporting ISO/IEC 14443A/MIFARE and FeliCa scheme
- NFCIP-1 mode

Enabled in Reader/Writer mode for ISO/IEC 14443A/MIFARE, the PN512's internal transmitter part is able to drive a reader/writer antenna designed to communicate with ISO/IEC 14443A/ MIFARE cards and transponders without additional active circuitry. The receiver part provides a robust and efficient implementation of a demodulation and

decoding circuitry for signals from ISO/IEC 14443A/MIFARE compatible cards and transponders. The digital part handles the complete ISO/IEC 14443A framing and error detection (Parity & CRC).

The PN512 supports MIFARE 1K or MIFARE 4K emulation products. The PN512 supports contactless communication using MIFARE higher transfer speeds up to 424 kbit/s in both directions.

Enabled in Reader/Writer mode for FeliCa, the PN512 transceiver IC supports the FeliCa communication scheme. The receiver part provides a robust and efficient implementation of the demodulation and decoding circuitry for FeliCa coded signals. The digital part handles the FeliCa framing and error detection like CRC. The PN512 supports contactless communication using FeliCa Higher transfer speeds up to 424 kbit/s in both directions.

The PN512 supports all layers of the ISO/IEC 14443B reader/writer communication scheme, given correct implementation of additional components, like oscillator, power supply, coil etc. and provided that standardized protocols, e.g. like ISO/IEC 14443-4 and/or ISO/IEC 14443B anticollision are correctly implemented.

In Card Operation mode, the PN512 transceiver IC is able to answer to a reader/writer command either according to the FeliCa or ISO/IEC 14443A/MIFARE card interface scheme. The PN512 generates the digital load modulated signals and in addition with an external circuit the answer can be sent back to the reader/writer. A complete card functionality is only possible in combination with a secure IC using the S^2C interface.

Additionally, the PN512 transceiver IC offers the possibility to communicate directly to an NFCIP-1 device in the NFCIP-1 mode. The NFCIP-1 mode offers different communication mode and transfer speeds up to 424 kbit/s according to the Ecma 340 and ISO/IEC 18092 NFCIP-1 Standard. The digital part handles the complete NFCIP-1 framing and error detection.

Various host controller interfaces are implemented:

- 8-bit parallel interface[1]
- SPI interface
- serial UART (similar to RS232 with voltage levels according pad voltage supply)
- I^2C interface.

A purchaser of this NXP IC has to take care for appropriate third party patent licenses.

1. 8-bit parallel Interface only available in HVQFN40 package.

All information provided in this document is subject to legal disclaimers.

© NXP B.V. 2013. All rights reserved.

3. Features and benefits

- Highly integrated analog circuitry to demodulate and decode responses
- Buffered output drivers for connecting an antenna with the minimum number of external components
- Integrated RF Level detector
- Integrated data mode detector
- Supports ISO/IEC 14443 A/MIFARE
- Supports ISO/IEC 14443 B Read/Write modes
- Typical operating distance in Read/Write mode up to 50 mm depending on the antenna size and tuning
- Typical operating distance in NFCIP-1 mode up to 50 mm depending on the antenna size and tuning and power supply
- Typical operating distance in ISO/IEC 14443A/MIFARE card or FeliCa Card Operation mode of about 100 mm depending on the antenna size and tuning and the external field strength
- Supports MIFARE 1K or MIFARE 4K emulation encryption in Reader/Writer mode
- ISO/IEC 14443A higher transfer speed communication at 212 kbit/s and 424 kbit/s
- Contactless communication according to the FeliCa scheme at 212 kbit/s and 424 kbit/s
- Integrated RF interface for NFCIP-1 up to 424 kbit/s
- S^2C interface
- Additional power supply to directly supply the smart card IC connected via S^2C
- Supported host interfaces
  - SPI up to 10 Mbit/s
  - I^2C-bus interface up to 400 kBd in Fast mode, up to 3400 kBd in High-speed mode
  - RS232 Serial UART up to 1228.8 kBd, with voltage levels dependant on pin voltage supply
  - 8-bit parallel interface with and without Address Latch Enable
- FIFO buffer handles 64 byte send and receive
- Flexible interrupt modes
- Hard reset with low power function
- Power-down mode per software
- Programmable timer
- Internal oscillator for connection to 27.12 MHz quartz crystal
- 2.5 V to 3.6 V power supply
- CRC coprocessor
- Programmable I/O pins
- Internal self-test

All information provided in this document is subject to legal disclaimers.

© NXP B.V. 2013. All rights reserved.

4. Quick reference data

Table 1. Quick reference data

Symbol	Parameter	Conditions		Min	Typ	Max	Unit
V_{DDA}	analog supply voltage	$V_{DD(PVDD)} \leq V_{DDA} = V_{DDD} = V_{DD(TVDD)}$; $V_{SSA} = V_{SSD} = V_{SS(PVSS)} = V_{SS(TVSS)} = 0$ V	[1][2]	2.5	-	3.6	V
V_{DDD}	digital supply voltage						
$V_{DD(TVDD)}$	TVDD supply voltage						
$V_{DD(PVDD)}$	PVDD supply voltage		[3]	1.6	-	3.6	V
$V_{DD(SVDD)}$	SVDD supply voltage	$V_{SSA} = V_{SSD} = V_{SS(PVSS)} = V_{SS(TVSS)} = 0$ V		1.6	-	3.6	V
I_{pd}	power-down current	$V_{DDA} = V_{DDD} = V_{DD(TVDD)} = V_{DD(PVDD)} = 3$ V					
		hard power-down; pin NRSTPD set LOW	[4]	-	-	5	μA
		soft power-down; RF level detector on	[4]	-	-	10	μA
I_{DDD}	digital supply current	pin DVDD; $V_{DDD} = 3$ V		-	6.5	9	mA
I_{DDA}	analog supply current	pin AVDD; $V_{DDA} = 3$ V, CommandReg register's RcvOff bit = 0		-	7	10	mA
		pin AVDD; receiver switched off; $V_{DDA} = 3$ V, CommandReg register's RcvOff bit = 1		-	3	5	mA
$I_{DD(PVDD)}$	PVDD supply current	pin PVDD	[5]	-	-	40	mA
$I_{DD(TVDD)}$	TVDD supply current	pin TVDD; continuous wave	[6][7][8]	-	60	100	mA
T_{amb}	ambient temperature	HVQFN32, HVQFN40, TFBGA64		–30		+85	°C
Industrial version:							
I_{pd}	power-down current	$V_{DDA} = V_{DDD} = V_{DD(TVDD)} = V_{DD(PVDD)} = 3$ V					
		hard power-down; pin NRSTPD set LOW	[4]	-	-	15	μA
		soft power-down; RF level detector on	[4]	-	-	30	μA
T_{amb}	ambient temperature	HVQFN32		–40	-	+90	°C

[1] Supply voltages below 3 V reduce the performance in, for example, the achievable operating distance.

[2] V_{DDA}, V_{DDD} and $V_{DD(TVDD)}$ must always be the same voltage.

[3] $V_{DD(PVDD)}$ must always be the same or lower voltage than V_{DDD}.

[4] I_{pd} is the total current for all supplies.

[5] $I_{DD(PVDD)}$ depends on the overall load at the digital pins.

[6] $I_{DD(TVDD)}$ depends on $V_{DD(TVDD)}$ and the external circuit connected to pins TX1 and TX2.

[7] During typical circuit operation, the overall current is below 100 mA.

[8] Typical value using a complementary driver configuration and an antenna matched to 40 Ω between pins TX1 and TX2 at 13.56 MHz.

All information provided in this document is subject to legal disclaimers.

© NXP B.V. 2013. All rights reserved.

5. Ordering information

Table 2. Ordering information

Type number	Package		
	Name	Description	Version
PN5120A0HN1/C2	HVQFN32	plastic thermal enhanced very thin quad flat package; no leads; 32 terminal; body 5 × 5 × 0.85 mm	SOT617-1
PN5120A0HN/C2	HVQFN40	plastic thermal enhanced very thin quad flat package; no leads; 40 terminals; body 6 × 6 × 0.85 mm	SOT618-1
PN512AA0HN1/C2	HVQFN32	plastic thermal enhanced very thin quad flat package; no leads; 32 terminal; body 5 × 5 × 0.85 mm	SOT617-1
PN512AA0HN1/C2BI	HVQFN32	plastic thermal enhanced very thin quad flat package; no leads; 32 terminal; body 5 × 5 × 0.85 mm	SOT617-1
PN5120A0HN1/C1	HVQFN32	plastic thermal enhanced very thin quad flat package; no leads; 32 terminal; body 5 × 5 × 0.85 mm	SOT617-1
PN5120A0HN/C1	HVQFN40	plastic thermal enhanced very thin quad flat package; no leads; 40 terminals; body 6 × 6 × 0.85 mm	SOT618-1
PN5120A0ET/C2	TFBGA64	plastic thin fine-pitch ball grid array package; 64 balls	SOT1336-1

All information provided in this document is subject to legal disclaimers.

© NXP B.V. 2013. All rights reserved.

6. Block diagram

The analog interface handles the modulation and demodulation of the analog signals according to the Card Receiving mode, Reader/Writer mode and NFCIP-1 mode communication scheme.

The RF level detector detects the presence of an external RF-field delivered by the antenna to the RX pin.

The Data mode detector detects a MIFARE, FeliCa or NFCIP-1 mode in order to prepare the internal receiver to demodulate signals, which are sent to the PN512.

The communication (S^2C) interface provides digital signals to support communication for transfer speeds above 424 kbit/s and digital signals to communicate to a secure IC.

The contactless UART manages the protocol requirements for the communication protocols in cooperation with the host. The FIFO buffer ensures fast and convenient data transfer to and from the host and the contactless UART and vice versa.

Various host interfaces are implemented to meet different customer requirements.

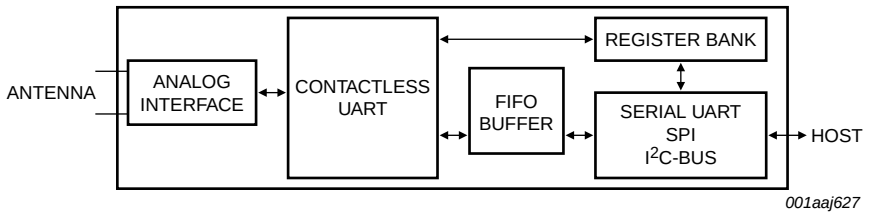

Fig 1. Simplified block diagram of the PN512

All information provided in this document is subject to legal disclaimers.

© NXP B.V. 2013. All rights reserved.

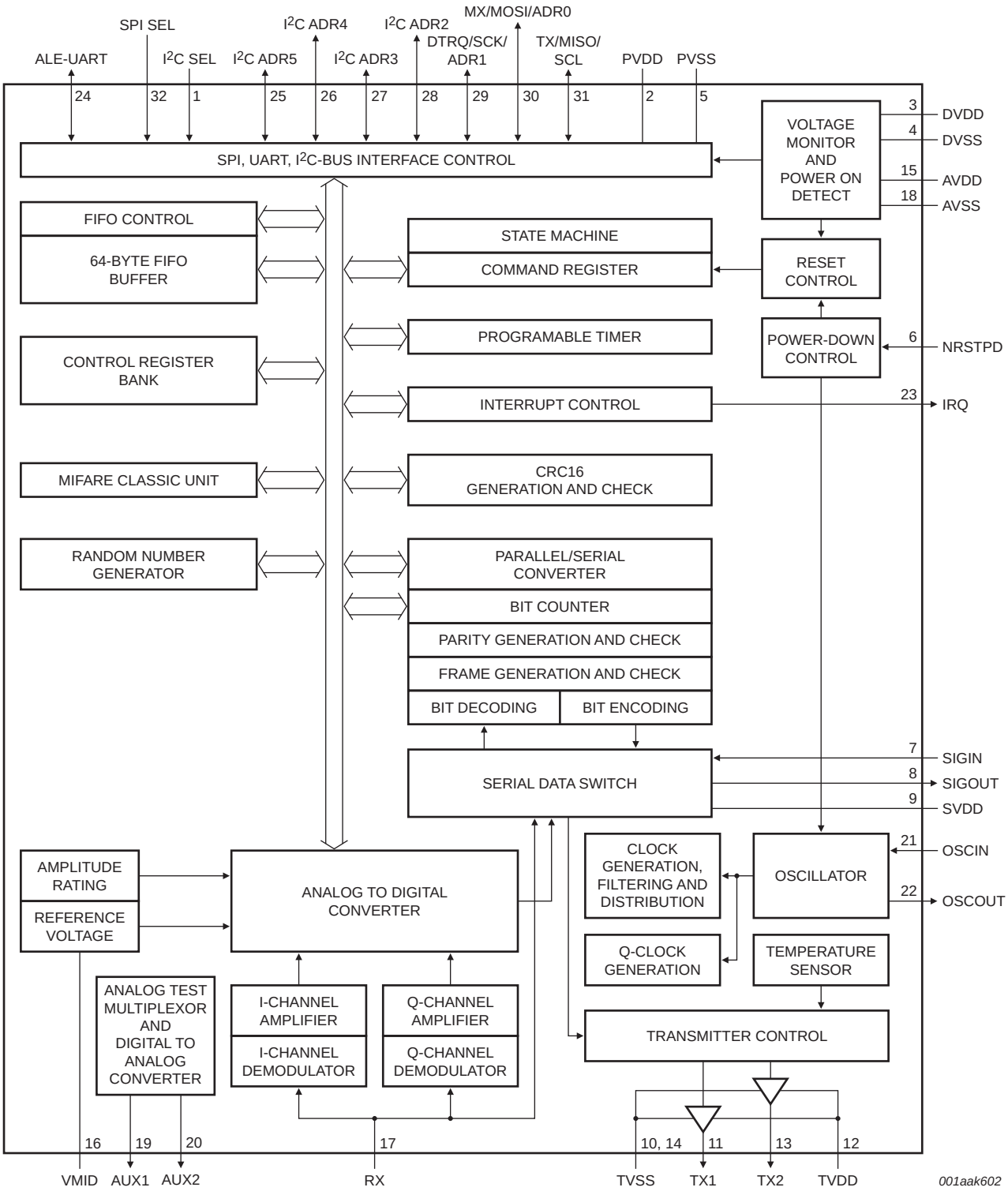

Fig 2. Detailed block diagram of the PN512

All information provided in this document is subject to legal disclaimers.

© NXP B.V. 2013. All rights reserved.

7. Pinning information

7.1 Pinning

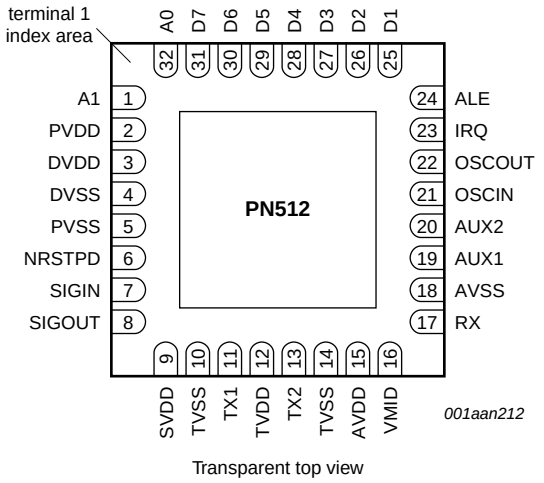

Fig 3. Pinning configuration HVQFN32 (SOT617-1)

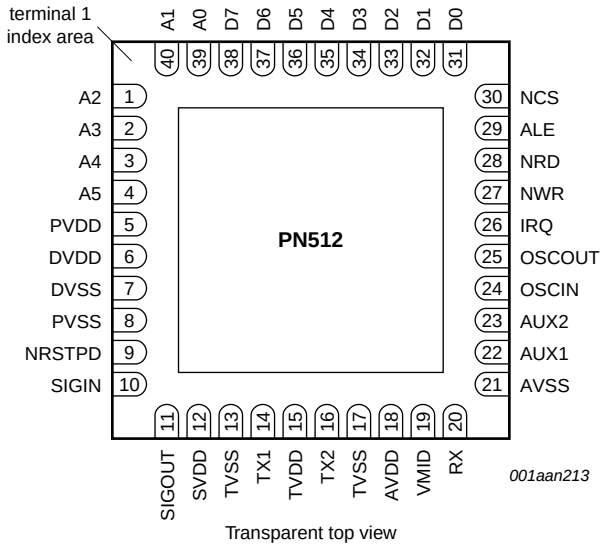

Fig 4. Pinning configuration HVQFN40 (SOT618-1)

All information provided in this document is subject to legal disclaimers.

© NXP B.V. 2013. All rights reserved.

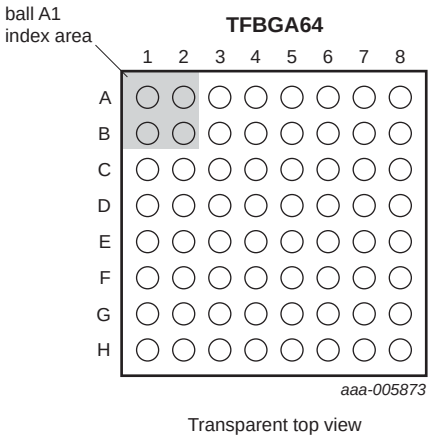

Fig 5. Pin configuration TFBGA64 (SOT1336-1)

All information provided in this document is subject to legal disclaimers.

© NXP B.V. 2013. All rights reserved.

7.2 Pin description

Table 3. Pin description HVQFN32

Pin	Symbol	Type	Description
1	A1	I	**Address Line**
2	PVDD	PWR	**Pad power supply**
3	DVDD	PWR	**Digital Power Supply**
4	DVSS	PWR	**Digital Ground**
5	PVSS	PWR	**Pad power supply ground**
6	NRSTPD	I	**Not Reset and Power Down:** When LOW, internal current sinks are switched off, the oscillator is inhibited, and the input pads are disconnected from the outside world. With a positive edge on this pin the internal reset phase starts.
7	SIGIN	I	**Communication Interface Input:** accepts a digital, serial data stream
8	SIGOUT	O	**Communication Interface Output**: delivers a serial data stream
9	SVDD	PWR	**S2C Pad Power Supply:** provides power to the S^2C pads
10	TVSS	PWR	**Transmitter Ground:** supplies the output stage of TX1 and TX2
11	TX1	O	**Transmitter 1:** delivers the modulated 13.56 MHz energy carrier
12	TVDD	PWR	**Transmitter Power Supply:** supplies the output stage of TX1 and TX2
13	TX2	O	**Transmitter 2:** delivers the modulated 13.56 MHz energy carrier
14	TVSS	PWR	**Transmitter Ground:** supplies the output stage of TX1 and TX2
15	AVDD	PWR	**Analog Power Supply**
16	VMID	PWR	**Internal Reference Voltage:** This pin delivers the internal reference voltage.
17	RX	I	**Receiver Input**
18	AVSS	PWR	**Analog Ground**
19	AUX1	O	**Auxiliary Outputs:** These pins are used for testing.
20	AUX2	O	
21	OSCIN	I	**Crystal Oscillator Input:** input to the inverting amplifier of the oscillator. This pin is also the input for an externally generated clock (f_{osc} = 27.12 MHz).
22	OSCOUT	O	**Crystal Oscillator Output:** Output of the inverting amplifier of the oscillator.
23	IRQ	O	**Interrupt Request:** output to signal an interrupt event
24	ALE	I	**Address Latch Enable:** signal to latch AD0 to AD5 into the internal address latch when HIGH.
25 to 31	D1 to D7	I/O	**8-bit Bi-directional Data Bus.** **Remark:** An 8-bit parallel interface is not available. **Remark:** If the host controller selects I^2C as digital host controller interface, these pins can be used to define the I^2C address. **Remark:** For serial interfaces this pins can be used for test signals or I/Os.
32	A0	I	**Address Line**

All information provided in this document is subject to legal disclaimers.

© NXP B.V. 2013. All rights reserved.

Table 4. Pin description HVQFN40

Pin	Symbol	Type	Description
1 to 4	A2 to A5	I	**Address Line**
5	PVDD	PWR	**Pad power supply**
6	DVDD	PWR	**Digital Power Supply**
7	DVSS	PWR	**Digital Ground**
8	PVSS	PWR	**Pad power supply ground**
9	NRSTPD	I	**Not Reset and Power Down:** When LOW, internal current sinks are switched off, the oscillator is inhibited, and the input pads are disconnected from the outside world. With a positive edge on this pin the internal reset phase starts.
10	SIGIN	I	**Communication Interface Input:** accepts a digital, serial data stream
11	SIGOUT	O	**Communication Interface Output**: delivers a serial data stream
12	SVDD	PWR	**S^2C Pad Power Supply:** provides power to the S^2C pads
13	TVSS	PWR	**Transmitter Ground:** supplies the output stage of TX1 and TX2
14	TX1	O	**Transmitter 1:** delivers the modulated 13.56 MHz energy carrier
15	TVDD	PWR	**Transmitter Power Supply:** supplies the output stage of TX1 and TX2
16	TX2	O	**Transmitter 2:** delivers the modulated 13.56 MHz energy carrier
17	TVSS	PWR	**Transmitter Ground:** supplies the output stage of TX1 and TX2
18	AVDD	PWR	**Analog Power Supply**
19	VMID	PWR	**Internal Reference Voltage:** This pin delivers the internal reference voltage.
20	RX	I	**Receiver Input**
21	AVSS	PWR	**Analog Ground**
22	AUX1	O	**Auxiliary Outputs:** These pins are used for testing.
23	AUX2	O	
24	OSCIN	I	**Crystal Oscillator Input:** input to the inverting amplifier of the oscillator. This pin is also the input for an externally generated clock (f_{osc} = 27.12 MHz).
25	OSCOUT	O	**Crystal Oscillator Output:** Output of the inverting amplifier of the oscillator.
26	IRQ	O	**Interrupt Request:** output to signal an interrupt event
27	NWR	I	**Not Write:** strobe to write data (applied on D0 to D7) into the PN512 register
28	NRD	I	**Not Read:** strobe to read data from the PN512 register (applied on D0 to D7)
29	ALE	I	**Address Latch Enable:** signal to latch AD0 to AD5 into the internal address latch when HIGH.
30	NCS	I	**Not Chip Select:** selects and activates the host controller interface of the PN512
31 to 38	D0 to D7	I/O	**8-bit Bi-directional Data Bus.** **Remark:** For serial interfaces this pins can be used for test signals or I/Os. **Remark:** If the host controller selects I^2C as digital host controller interface, these pins can be used to define the I^2C address.
39 to 40	A0 to A1	I	**Address Line**

All information provided in this document is subject to legal disclaimers.

© NXP B.V. 2013. All rights reserved.

Table 5. Pin description TFBGA64

Pin	Symbol	Type	Description
A1 to A5, A8, B3, B4, B8, E1	PVSS	PWR	**Pad power supply ground**
A6	D4	I/O	**8-bit Bi-directional Data Bus.**
A7	D2	I/O	**Remark:** For serial interfaces this pins can be used for test signals or I/Os. **Remark:** If the host controller selects I^2C as digital host controller interface, these pins can be used to define the I^2C address.
B1	PVDD	PWR	**Pad power supply**
B2	A0	I	**Address Line**
B5	D5	I/O	**8-bit Bi-directional Data Bus.**
B6	D3	I/O	**Remark:** For serial interfaces this pins can be used for test signals or I/Os.
B7	D1	I/O	**Remark:** If the host controller selects I^2C as digital host controller interface, these pins can be used to define the I^2C address.
C1	DVDD	PWR	**Digital Power Supply**
C2	A1	I	**Address Line**
C3	D7	I/O	**8-bit Bi-directional Data Bus.**
C4	D6	I/O	**Remark:** For serial interfaces this pins can be used for test signals or I/Os. **Remark:** If the host controller selects I^2C as digital host controller interface, these pins can be used to define the I^2C address.
C5	IRQ	O	**Interrupt Request:** output to signal an interrupt event
C6	ALE	I	**Address Latch Enable:** signal to latch AD0 to AD5 into the internal address latch when HIGH.
C7, C8, D6, D8, E6, E8, F7, G8, H8	AVSS	PWR	**Analog Ground**
D1	DVSS	PWR	**Digital Ground**
D2	NRSTPD	I	**Not Reset and Power Down:** When LOW, internal current sinks are switched off, the oscillator is inhibited, and the input pads are disconnected from the outside world. With a positive edge on this pin the internal reset phase starts.
D3 to D5, E3 to E5, F3, F4, G1 to G6, H1, H2, H6	TVSS	PWR	**Transmitter Ground:** supplies the output stage of TX1 and TX2
D7	OSCOUT	O	**Crystal Oscillator Output:** Output of the inverting amplifier of the oscillator.
E2	SIGIN	I	**Communication Interface Input:** accepts a digital, serial data stream
E7	OSCIN	I	**Crystal Oscillator Input:** input to the inverting amplifier of the oscillator. This pin is also the input for an externally generated clock (f_{osc} = 27.12 MHz).
F1	SVDD	PWR	**S^2C Pad Power Supply:** provides power to the S^2C pads
F2	SIGOUT	O	**Communication Interface Output**: delivers a serial data stream
F5	AUX1	O	**Auxiliary Outputs:** These pins are used for testing.
F6	AUX2	O	
F8	RX	I	**Receiver Input**
G7	VMID	PWR	**Internal Reference Voltage:** This pin delivers the internal reference voltage.
H3	TX1	O	**Transmitter 1:** delivers the modulated 13.56 MHz energy carrier

All information provided in this document is subject to legal disclaimers.

© NXP B.V. 2013. All rights reserved.

Table 5. Pin description TFBGA64

Pin	Symbol	Type	Description
H4	TVDD	PWR	**Transmitter Power Supply:** supplies the output stage of TX1 and TX2
H5	TX2	O	**Transmitter 2:** delivers the modulated 13.56 MHz energy carrier
H7	AVDD	PWR	**Analog Power Supply**

All information provided in this document is subject to legal disclaimers.

© NXP B.V. 2013. All rights reserved.

8. Functional description

The PN512 transmission module supports the Read/Write mode for ISO/IEC 14443 A/MIFARE and ISO/IEC 14443 B using various transfer speeds and modulation protocols.

PN512 transceiver IC supports the following operating modes:

- Reader/Writer mode supporting ISO/IEC 14443A/MIFARE and FeliCa scheme
- Card Operation mode supporting ISO/IEC 14443A/MIFARE and FeliCa scheme
- NFCIP-1 mode

The modes support different transfer speeds and modulation schemes. The following chapters will explain the different modes in detail.

Note: All indicated modulation indices and modes in this chapter are system parameters. This means that beside the IC settings a suitable antenna tuning is required to achieve the optimum performance.

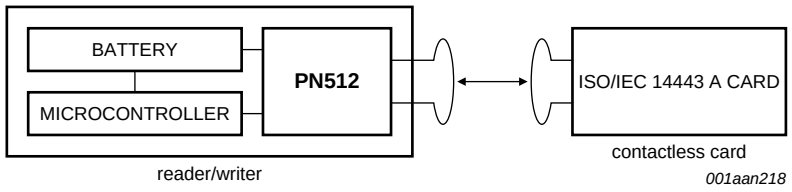

Fig 6. PN512 Read/Write mode

8.1 ISO/IEC 14443 A/MIFARE functionality

The physical level communication is shown in Figure 7.

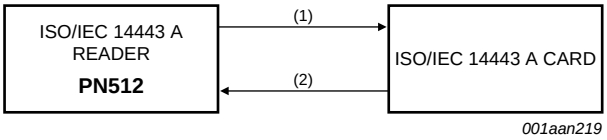

Fig 7. ISO/IEC 14443 A/MIFARE Read/Write mode communication diagram

The physical parameters are described in Table 4.

Table 6. Communication overview for ISO/IEC 14443 A/MIFARE reader/writer

Communication direction	Signal type	Transfer speed		
		106 kBd	212 kBd	424 kBd
Reader to card (send data from the PN512 to a card)	reader side modulation	100 % ASK	100 % ASK	100 % ASK
	bit encoding	modified Miller encoding	modified Miller encoding	modified Miller encoding
	bit length	128 (13.56 µs)	64 (13.56 µs)	32 (13.56 µs)

All information provided in this document is subject to legal disclaimers.

© NXP B.V. 2013. All rights reserved.

Table 6. Communication overview for ISO/IEC 14443 A/MIFARE reader/writer *...continued*

Communication direction	Signal type	Transfer speed		
		106 kBd	212 kBd	424 kBd
Card to reader (PN512 receives data from a card)	card side modulation	subcarrier load modulation	subcarrier load modulation	subcarrier load modulation
	subcarrier frequency	13.56 MHz/16	13.56 MHz/16	13.56 MHz/16
	bit encoding	Manchester encoding	BPSK	BPSK

The PN512's contactless UART and dedicated external host must manage the complete ISO/IEC 14443 A/MIFARE protocol. Figure 8 shows the data coding and framing according to ISO/IEC 14443 A/MIFARE.

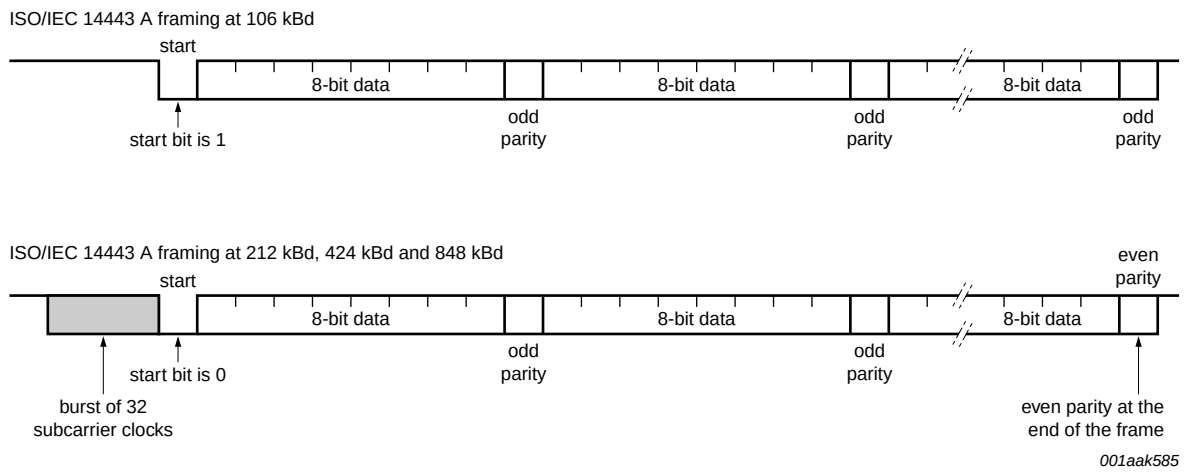

Fig 8. Data coding and framing according to ISO/IEC 14443 A

The internal CRC coprocessor calculates the CRC value based on ISO/IEC 14443 A part 3 and handles parity generation internally according to the transfer speed. Automatic parity generation can be switched off using the ManualRCVReg register's ParityDisable bit.

8.2 ISO/IEC 14443 B functionality

The MFRC523 reader IC fully supports international standard ISO 14443 which includes communication schemes ISO 14443 A and ISO 14443 B.

Refer to the ISO 14443 reference documents *Identification cards - Contactless integrated circuit cards - Proximity cards* (parts 1 to 4).

Remark: NXP Semiconductors does not offer a software library to enable design-in of the ISO 14443 B protocol.

All information provided in this document is subject to legal disclaimers.

© NXP B.V. 2013. All rights reserved.

8.3 FeliCa reader/writer functionality

The FeliCa mode is the general reader/writer to card communication scheme according to the FeliCa specification. The following diagram describes the communication on a physical level, the communication overview describes the physical parameters.

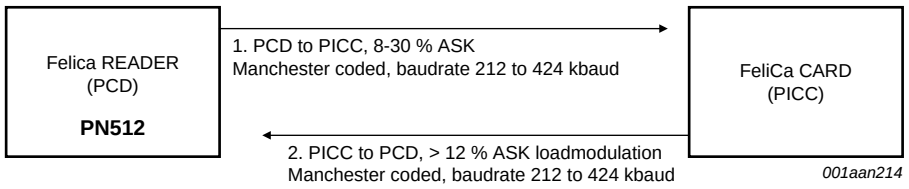

Fig 9. FeliCa reader/writer communication diagram

Table 7. Communication overview for FeliCa reader/writer

Communication direction		FeliCa	FeliCa Higher transfer speeds
	Transfer speed	**212 kbit/s**	**424 kbit/s**
PN512 → card	Modulation on reader side	8-30 % ASK	8-30 % ASK
	bit coding	Manchester Coding	Manchester Coding
	Bitlength	(64/13.56) µs	(32/13.56) µs
card → PN512	Loadmodulation on card side	> 12 % ASK	> 12 % ASK
	bit coding	Manchester coding	Manchester coding

The contactless UART of PN512 and a dedicated external host controller are required to handle the complete FeliCa protocol.

8.3.1 FeliCa framing and coding

Table 8. FeliCa framing and coding

Preamble						Sync		Len	n-Data				CRC	
00h	00h	00h	00h	00h	00h	B2h	4Dh							

To enable the FeliCa communication a 6 byte preamble (00h, 00h, 00h, 00h, 00h, 00h) and 2 bytes Sync bytes (B2h, 4Dh) are sent to synchronize the receiver.

The following Len byte indicates the length of the sent data bytes plus the LEN byte itself. The CRC calculation is done according to the FeliCa definitions with the MSB first.

To transmit data on the RF interface, the host controller has to send the Len- and data-bytes to the PN512's FIFO-buffer. The preamble and the sync bytes are generated by the PN512 automatically and must not be written to the FIFO by the host controller. The PN512 performs internally the CRC calculation and adds the result to the data frame.

Example for FeliCa CRC Calculation:

Table 9. Start value for the CRC Polynomial: (00h), (00h)

Preamble						Sync		Len	2 Data Bytes		CRC	
00h	00h	00h	00h	00h	00h	B2h	4Dh	03h	ABh	CDh	90h	35h

All information provided in this document is subject to legal disclaimers.

© NXP B.V. 2013. All rights reserved.

8.4 NFCIP-1 mode

The NFCIP-1 communication differentiates between an active and a Passive Communication mode.

- Active Communication mode means both the initiator and the target are using their own RF field to transmit data.
- Passive Communication mode means that the target answers to an initiator command in a load modulation scheme. The initiator is active in terms of generating the RF field.
- Initiator: generates RF field at 13.56 MHz and starts the NFCIP-1 communication
- Target: responds to initiator command either in a load modulation scheme in Passive Communication mode or using a self generated and self modulated RF field for Active Communication mode.

In order to fully support the NFCIP-1 standard the PN512 supports the Active and Passive Communication mode at the transfer speeds 106 kbit/s, 212 kbit/s and 424 kbit/s as defined in the NFCIP-1 standard.

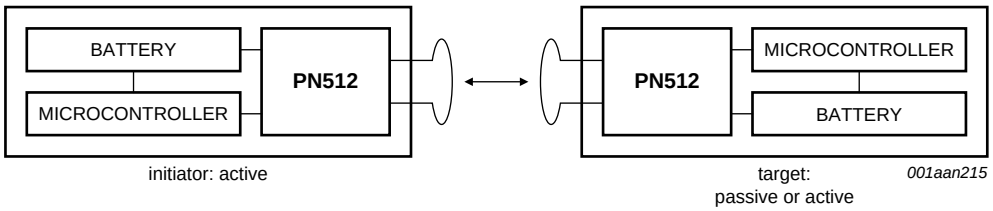

Fig 10. NFCIP-1 mode

All information provided in this document is subject to legal disclaimers.

© NXP B.V. 2013. All rights reserved.

8.4.1 Active communication mode

Active communication mode means both the initiator and the target are using their own RF field to transmit data.

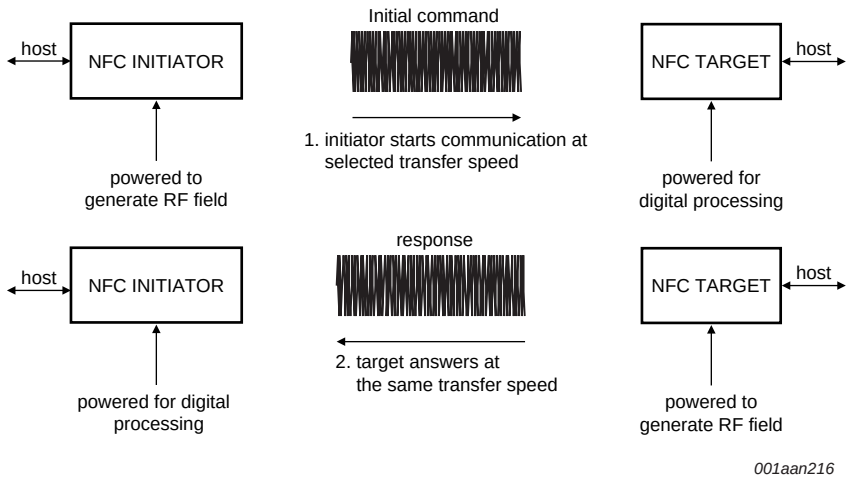

Fig 11. Active communication mode

Table 10. Communication overview for Active communication mode

Communication direction	106 kbit/s	212 kbit/s	424 kbit/s	848 kbit/s	1.69 Mbit/s, 3.39 Mbit/s
Initiator → Target	According to ISO/IEC 14443A 100 % ASK, Modified Miller Coded	According to FeliCa, 8-30 % ASK Manchester Coded		digital capability to handle this communication	
Target → Initiator					

The contactless UART of PN512 and a dedicated host controller are required to handle the NFCIP-1 protocol.

Note: Transfer Speeds above 424 kbit/s are not defined in the NFCIP-1 standard. The PN512 supports these transfer speeds only with dedicated external circuits.

All information provided in this document is subject to legal disclaimers.

© NXP B.V. 2013. All rights reserved.

8.4.2 Passive communication mode

Passive Communication mode means that the target answers to an initiator command in a load modulation scheme. The initiator is active meaning generating the RF field.

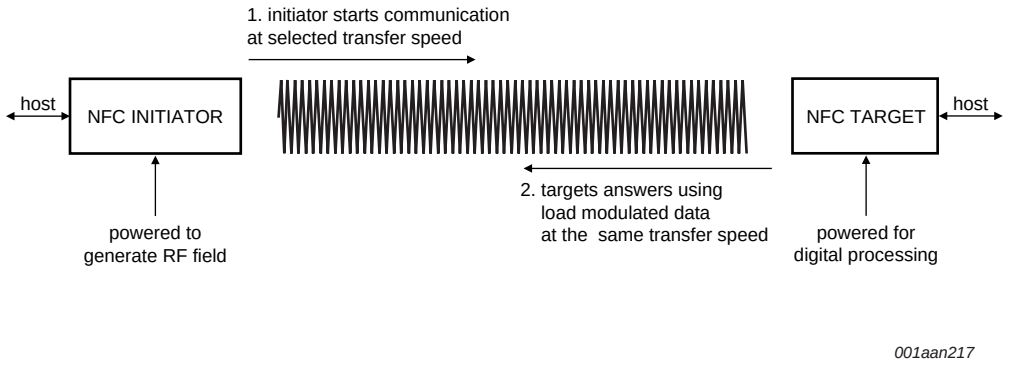

Fig 12. Passive communication mode

Table 11. Communication overview for Passive communication mode

Communication direction	106 kbit/s	212 kbit/s	424 kbit/s	848 kbit/s	1.69 Mbit/s, 3.39 Mbit/s
Initiator → Target	According to ISO/IEC 14443A 100 % ASK, Modified Miller Coded	According to FeliCa, 8-30 % ASK Manchester Coded		digital capability to handle this communication	
Target → Initiator	According to ISO/IEC 14443A subcarrier load modulation, Manchester Coded	According to FeliCa, > 12 % ASK Manchester Coded			

The contactless UART of PN512 and a dedicated host controller are required to handle the NFCIP-1 protocol.

Note: Transfer Speeds above 424 kbit/s are not defined in the NFCIP-1 standard. The PN512 supports these transfer speeds only with dedicated external circuits.

All information provided in this document is subject to legal disclaimers.

© NXP B.V. 2013. All rights reserved.

8.4.3 NFCIP-1 framing and coding

The NFCIP-1 framing and coding in Active and Passive Communication mode is defined in the NFCIP-1 standard.

Table 12. Framing and coding overview

Transfer speed	Framing and Coding
106 kbit/s	According to the ISO/IEC 14443A/MIFARE scheme
212 kbit/s	According to the FeliCa scheme
424 kbit/s	According to the FeliCa scheme

8.4.4 NFCIP-1 protocol support

The NFCIP-1 protocol is not completely described in this document. For detailed explanation of the protocol refer to the NFCIP-1 standard. However the datalink layer is according to the following policy:

- Speed shall not be changed while continuum data exchange in a transaction.
- Transaction includes initialization and anticollision methods and data exchange (in continuous way, meaning no interruption by another transaction).

In order not to disturb current infrastructure based on 13.56 MHz general rules to start NFCIP-1 communication are defined in the following way.

1. Per default NFCIP-1 device is in Target mode meaning its RF field is switched off.
2. The RF level detector is active.
3. Only if application requires the NFCIP-1 device shall switch to Initiator mode.
4. Initiator shall only switch on its RF field if no external RF field is detected by RF Level detector during a time of TIDT.
5. The initiator performs initialization according to the selected mode.

8.4.5 MIFARE Card operation mode

Table 13. MIFARE Card operation mode

Communication direction		ISO/IEC 14443A/ MIFARE	MIFARE Higher transfer speeds	
	transfer speed	106 kbit/s	212 kbit/s	424 kbit/s
reader/writer → PN512	Modulation on reader side	100 % ASK	100 % ASK	100 % ASK
	bit coding	Modified Miller	Modified Miller	Modified Miller
	Bitlength	(128/13.56) µs	(64/13.56) µs	(32/13.56) µs
PN512 → reader/ writer	Modulation on PN512 side	subcarrier load modulation	subcarrier load modulation	subcarrier load modulation
	subcarrier frequency	13.56 MHz/16	13.56 MHz/16	13.56 MHz/16
	bit coding	Manchester coding	BPSK	BPSK

All information provided in this document is subject to legal disclaimers.

© NXP B.V. 2013. All rights reserved.

8.4.6 FeliCa Card operation mode

Table 14. FeliCa Card operation mode

Communication direction		FeliCa	FeliCa Higher transfer speeds
	Transfer speed	**212 kbit/s**	**424 kbit/s**
reader/writer → PN512	Modulation on reader side	8-30 % ASK	8-30 % ASK
	bit coding	Manchester Coding	Manchester Coding
	Bitlength	(64/13.56) µs	(32/13.56) µs
PN512 → reader/ writer	Load modulation on PN512 side	> 12 % ASK load modulation	> 12 % ASK load modulation
	bit coding	Manchester coding	Manchester coding

9. PN512 register SET

9.1 PN512 registers overview

Table 15. PN512 registers overview

Addr (hex)	Register Name	Function
Page 0: Command and Status		
0	PageReg	Selects the register page
1	CommandReg	Starts and stops command execution
2	ComlEnReg	Controls bits to enable and disable the passing of Interrupt Requests
3	DivlEnReg	Controls bits to enable and disable the passing of Interrupt Requests
4	ComIrqReg	Contains Interrupt Request bits
5	DivIrqReg	Contains Interrupt Request bits
6	ErrorReg	Error bits showing the error status of the last command executed
7	Status1Reg	Contains status bits for communication
8	Status2Reg	Contains status bits of the receiver and transmitter
9	FIFODataReg	In- and output of 64 byte FIFO-buffer
A	FIFOLevelReg	Indicates the number of bytes stored in the FIFO
B	WaterLevelReg	Defines the level for FIFO under- and overflow warning
C	ControlReg	Contains miscellaneous Control Registers
D	BitFramingReg	Adjustments for bit oriented frames
E	CollReg	Bit position of the first bit collision detected on the RF-interface
F	RFU	Reserved for future use
Page 1: Command		
0	PageReg	Selects the register page
1	ModeReg	Defines general modes for transmitting and receiving
2	TxModeReg	Defines the data rate and framing during transmission
3	RxModeReg	Defines the data rate and framing during receiving
4	TxControlReg	Controls the logical behavior of the antenna driver pins TX1 and TX2
5	TxAutoReg	Controls the setting of the antenna drivers

All information provided in this document is subject to legal disclaimers.

© NXP B.V. 2013. All rights reserved.

Table 15. PN512 registers overview *...continued*

Addr (hex)	Register Name	Function
6	TxSelReg	Selects the internal sources for the antenna driver
7	RxSelReg	Selects internal receiver settings
8	RxThresholdReg	Selects thresholds for the bit decoder
9	DemodReg	Defines demodulator settings
A	FelNFC1Reg	Defines the length of the valid range for the receive package
B	FelNFC2Reg	Defines the length of the valid range for the receive package
C	MifNFCReg	Controls the communication in ISO/IEC 14443/MIFARE and NFC target mode at 106 kbit
D	ManualRCVReg	Allows manual fine tuning of the internal receiver
E	TypeBReg	Configure the ISO/IEC 14443 type B
F	SerialSpeedReg	Selects the speed of the serial UART interface
Page 2: CFG		
0	PageReg	Selects the register page
1	CRCResultReg	Shows the actual MSB and LSB values of the CRC calculation
2		
3	GsNOffReg	Selects the conductance of the antenna driver pins TX1 and TX2 for modulation, when the driver is switched off
4	ModWidthReg	Controls the setting of the ModWidth
5	TxBitPhaseReg	Adjust the TX bit phase at 106 kbit
6	RFCfgReg	Configures the receiver gain and RF level
7	GsNOnReg	Selects the conductance of the antenna driver pins TX1 and TX2 for modulation when the drivers are switched on
8	CWGsPReg	Selects the conductance of the antenna driver pins TX1 and TX2 for modulation during times of no modulation
9	ModGsPReg	Selects the conductance of the antenna driver pins TX1 and TX2 for modulation during modulation
A	TModeReg	Defines settings for the internal timer
B	TPrescalerReg	
C	TReloadReg	Describes the 16-bit timer reload value
D		
E	TCounterValReg	Shows the 16-bit actual timer value
F		
Page 3: TestRegister		
0	PageReg	selects the register page
1	TestSel1Reg	General test signal configuration
2	TestSel2Reg	General test signal configuration and PRBS control
3	TestPinEnReg	Enables pin output driver on 8-bit parallel bus (Note: For serial interfaces only)
4	TestPin ValueReg	Defines the values for the 8-bit parallel bus when it is used as I/O bus
5	TestBusReg	Shows the status of the internal testbus
6	AutoTestReg	Controls the digital selftest

All information provided in this document is subject to legal disclaimers.

© NXP B.V. 2013. All rights reserved.

Table 15. PN512 registers overview *...continued*

Addr (hex)	Register Name	Function
7	VersionReg	Shows the version
8	AnalogTestReg	Controls the pins AUX1 and AUX2
9	TestDAC1Reg	Defines the test value for the TestDAC1
A	TestDAC2Reg	Defines the test value for the TestDAC2
B	TestADCReg	Shows the actual value of ADC I and Q
C-F	RFT	Reserved for production tests

9.1.1 Register bit behavior

Depending on the functionality of a register, the access conditions to the register can vary. In principle bits with same behavior are grouped in common registers. In Table 16 the access conditions are described.

Table 16. Behavior of register bits and its designation

Abbreviation	Behavior	Description
r/w	read and write	These bits can be written and read by the μ-Controller. Since they are used only for control means, there content is not influenced by internal state machines, e.g. the PageSelect-Register may be written and read by the μ-Controller. It will also be read by internal state machines, but never changed by them.
dy	dynamic	These bits can be written and read by the μ-Controller. Nevertheless, they may also be written automatically by internal state machines, e.g. the Command-Register changes its value automatically after the execution of the actual command.
r	read only	These registers hold bits, which value is determined by internal states only, e.g. the CRCReady bit can not be written from external but shows internal states.
w	write only	Reading these registers returns always ZERO.
RFU	-	These registers are reserved for future use. In case of a PN512 Version version 2.0 (VersionReg = 82h) a read access to these registers returns always the value “0”. Nevertheless this is not guaranteed for future chips versions where the value is undefined. In case of a write access, it is recommended to write always the value “0”.
RFT	-	These registers are reserved for production tests and shall not be changed.

All information provided in this document is subject to legal disclaimers.

© NXP B.V. 2013. All rights reserved.

9.2 Register description

9.2.1 Page 0: Command and status

9.2.1.1 PageReg

Selects the register page.

Table 17. PageReg register (address 00h); reset value: 00h, 0000000b

	7	6	5	4	3	2	1	0
	UsePage Select	0	0	0	0	0	PageSelect	
Access Rights	r/w	RFU	RFU	RFU	RFU	RFU	r/w	r/w

Table 18. Description of PageReg bits

Bit	Symbol	Description
7	UsePageSelect	Set to logic 1, the value of PageSelect is used as register address A5 and A4. The LSB-bits of the register address are defined by the address pins or the internal address latch, respectively. Set to logic 0, the whole content of the internal address latch defines the register address. The address pins are used as described in Section 10.1 “Automatic microcontroller interface detection”.
6 to 2	-	Reserved for future use.
1 to 0	PageSelect	The value of PageSelect is used only if UsePageSelect is set to logic 1. In this case it specifies the register page (which is A5 and A4 of the register address).

9.2.1.2 CommandReg

Starts and stops command execution.

Table 19. CommandReg register (address 01h); reset value: 20h, 00100000b

	7	6	5	4	3	2	1	0
	0	0	RcvOff	Power Down		Command		
Access Rights	RFU	RFU	r/w	dy	dy	dy	dy	dy

Table 20. Description of CommandReg bits

Bit	Symbol	Description
7 to 6	-	Reserved for future use.
5	RcvOff	Set to logic 1, the analog part of the receiver is switched off.
4	PowerDown	Set to logic 1, Soft Power-down mode is entered. Set to logic 0, the PN512 starts the wake up procedure. During this procedure this bit still shows a 1. A 0 indicates that the PN512 is ready for operations; see Section 16.2 “Soft power-down mode”. Note: The bit Power Down cannot be set, when the command SoftReset has been activated.
3 to 0	Command	Activates a command according to the Command Code. Reading this register shows, which command is actually executed (see Section 19.3 “PN512 command overview”).

All information provided in this document is subject to legal disclaimers.

© NXP B.V. 2013. All rights reserved.

9.2.1.3 CommIEnReg

Control bits to enable and disable the passing of interrupt requests.

Table 21. CommIEnReg register (address 02h); reset value: 80h, 10000000b

	7	6	5	4	3	2	1	0
	IRqInv	TxIEn	RxIEn	IdleIEn	HiAlertIEn	LoAlertIEn	ErrIEn	TimerIEn
Access Rights	r/w	r/w	r/w	r/w	r/w	r/w	r/w	r/w

Table 22. Description of CommIEnReg bits

Bit	Symbol	Description
7	IRqInv	Set to logic 1, the signal on pin IRQ is inverted with respect to bit IRq in the register Status1Reg. Set to logic 0, the signal on pin IRQ is equal to bit IRq. In combination with bit IRqPushPull in register DivIEnReg, the default value of 1 ensures, that the output level on pin IRQ is 3-state.
6	TxIEn	Allows the transmitter interrupt request (indicated by bit TxIRq) to be propagated to pin IRQ.
5	RxIEn	Allows the receiver interrupt request (indicated by bit RxIRq) to be propagated to pin IRQ.
4	IdleIEn	Allows the idle interrupt request (indicated by bit IdleIRq) to be propagated to pin IRQ.
3	HiAlertIEn	Allows the high alert interrupt request (indicated by bit HiAlertIRq) to be propagated to pin IRQ.
2	LoAlertIEn	Allows the low alert interrupt request (indicated by bit LoAlertIRq) to be propagated to pin IRQ.
1	ErrIEn	Allows the error interrupt request (indicated by bit ErrIRq) to be propagated to pin IRQ.
0	TimerIEn	Allows the timer interrupt request (indicated by bit TimerIRq) to be propagated to pin IRQ.

All information provided in this document is subject to legal disclaimers.

© NXP B.V. 2013. All rights reserved.

9.2.1.4 DivIEnReg

Control bits to enable and disable the passing of interrupt requests.

Table 23. DivIEnReg register (address 03h); reset value: 00h, 00000000b

	7	6	5	4	3	2	1	0
	IRQPushPull	0	0	SiginActIEn	ModeIEn	CRCIEn	RFOnIEn	RFOffIEn
Access Rights	r/w	RFU	RFU	r/w	r/w	r/w	r/w	r/w

Table 24. Description of DivIEnReg bits

Bit	Symbol	Description
7	IRQPushPull	Set to logic 1, the pin IRQ works as standard CMOS output pad. Set to logic 0, the pin IRQ works as open drain output pad.
6 to 5	-	Reserved for future use.
4	SiginActIEn	Allows the SIGIN active interrupt request to be propagated to pin IRQ.
3	ModeIEn	Allows the mode interrupt request (indicated by bit ModeIRq) to be propagated to pin IRQ.
2	CRCIEn	Allows the CRC interrupt request (indicated by bit CRCIRq) to be propagated to pin IRQ.
1	RfOnIEn	Allows the RF field on interrupt request (indicated by bit RfOnIRq) to be propagated to pin IRQ.
0	RfOffIEn	Allows the RF field off interrupt request (indicated by bit RfOffIRq) to be propagated to pin IRQ.

All information provided in this document is subject to legal disclaimers.

© NXP B.V. 2013. All rights reserved.

9.2.1.5 CommIRqReg

Contains Interrupt Request bits.

Table 25. CommIRqReg register (address 04h); reset value: 14h, 00010100b

	7	6	5	4	3	2	1	0
	Set1	TxIRq	RxIRq	IdleIRq	HiAlertIRq	LoAlertIRq	ErrIRq	TimerIRq
Access Rights	w	dy	dy	dy	dy	dy	dy	dy

Table 26. Description of CommIRqReg bits

All bits in the register CommIRqReg shall be cleared by software.

Bit	Symbol	Description
7	Set1	Set to logic 1, Set1 defines that the marked bits in the register CommIRqReg are set. Set to logic 0, Set1 defines, that the marked bits in the register CommIRqReg are cleared.
6	TxIRq	Set to logic 1 immediately after the last bit of the transmitted data was sent out.
5	RxIRq	Set to logic 1 when the receiver detects the end of a valid datastream. If the bit RxNoErr in register RxModeReg is set to logic 1, bit RxIRq is only set to logic 1 when data bytes are available in the FIFO.
4	IdleIRq	Set to logic 1, when a command terminates by itself e.g. when the CommandReg changes its value from any command to the Idle Command. If an unknown command is started, the CommandReg changes its content to the idle state and the bit IdleIRq is set. Starting the Idle Command by the μ-Controller does not set bit IdleIRq.
3	HiAlertIRq	Set to logic 1, when bit HiAlert in register Status1Reg is set. In opposition to HiAlert, HiAlertIRq stores this event and can only be reset as indicated by bit Set1.
2	LoAlertIRq	Set to logic 1, when bit LoAlert in register Status1Reg is set. In opposition to LoAlert, LoAlertIRq stores this event and can only be reset as indicated by bit Set1.
1	ErrIRq	Set to logic 1 if any error bit in the Error Register is set.
0	TimerIRq	Set to logic 1 when the timer decrements the TimerValue Register to zero.

All information provided in this document is subject to legal disclaimers.

© NXP B.V. 2013. All rights reserved.

9.2.1.6 DivIRqReg

Contains Interrupt Request bits

Table 27. DivIRqReg register (address 05h); reset value: XXh, 000X00XXb

	7	6	5	4	3	2	1	0
	Set2	0	0	SiginActIRq	ModeIRq	CRCIRq	RFOnIRq	RFOffIRq
Access Rights	w	RFU	RFU	dy	dy	dy	dy	dy

Table 28. Description of DivIRqReg bits

All bits in the register DivIRqReg shall be cleared by software.

Bit	Symbol	Description
7	Set2	Set to logic 1, Set2 defines that the marked bits in the register DivIRqReg are set. Set to logic 0, Set2 defines, that the marked bits in the register DivIRqReg are cleared
6 to 5	-	Reserved for future use.
4	SiginActIRq	Set to logic 1, when SIGIN is active. See Section 12.6 “S^{2}C interface support”. This interrupt is set when either a rising or falling signal edge is detected.
3	ModeIRq	Set to logic 1, when the mode has been detected by the Data mode detector. Note: The Data mode detector can only be activated by the AutoColl command and is terminated automatically having detected the Communication mode. Note: The Data mode detector is automatically restarted after each RF Reset.
2	CRCIRq	Set to logic 1, when the CRC command is active and all data are processed.
1	RFOnIRq	Set to logic 1, when an external RF field is detected.
0	RFOffIRq	Set to logic 1, when a present external RF field is switched off.

All information provided in this document is subject to legal disclaimers.

© NXP B.V. 2013. All rights reserved.

9.2.1.7 ErrorReg

Error bit register showing the error status of the last command executed.

Table 29. ErrorReg register (address 06h); reset value: 00h, 00000000b

	7	6	5	4	3	2	1	0
	WrErr	TempErr	RFErr	BufferOvfl	CollErr	CRCErr	ParityErr	ProtocolErr
Access Rights	r	r	r	r	r	r	r	r

Table 30. Description of ErrorReg bits

Bit	Symbol	Description
7	WrErr	Set to logic 1, when data is written into FIFO by the host controller during the AutoColl command or MFAuthent command or if data is written into FIFO by the host controller during the time between sending the last bit on the RF interface and receiving the last bit on the RF interface.
6	TempErr[1]	Set to logic 1, if the internal temperature sensor detects overheating. In this case, the antenna drivers are switched off automatically.
5	RFErr	Set to logic 1, if in Active Communication mode the counterpart does not switch on the RF field in time as defined in NFCIP-1 standard. Note: RFErr is only used in Active Communication mode. The bits RxFraming or the bits TxFraming has to be set to 01 to enable this functionality.
4	BufferOvfl	Set to logic 1, if the host controller or a PN512's internal state machine (e.g. receiver) tries to write data into the FIFO-bufferFIFO-buffer although the FIFO-buffer is already full.
3	CollErr	Set to logic 1, if a bit-collision is detected. It is cleared automatically at receiver start-up phase. This bit is only valid during the bitwise anticollision at 106 kbit. During communication schemes at 212 and 424 kbit this bit is always set to logic 1.
2	CRCErr	Set to logic 1, if bit RxCRCEn in register RxModeReg is set and the CRC calculation fails. It is cleared to 0 automatically at receiver start-up phase.
1	ParityErr	Set to logic 1, if the parity check has failed. It is cleared automatically at receiver start-up phase. Only valid for ISO/IEC 14443A/MIFARE or NFCIP-1 communication at 106 kbit.
0	ProtocolErr	Set to logic 1, if one out of the following cases occur: • Set to logic 1 if the SOF is incorrect. It is cleared automatically at receiver start-up phase. The bit is only valid for 106 kbit in Active and Passive Communication mode. • If bit DetectSync in register ModeReg is set to logic 1 during FeliCa communication or active communication with transfer speeds higher than 106 kbit, the bit ProtocolErr is set to logic 1 in case of a byte length violation. • During the AutoColl command, bit ProtocolErr is set to logic 1, if the bit Initiator in register ControlReg is set to logic 1. • During the MFAuthent Command, bit ProtocolErr is set to logic 1, if the number of bytes received in one data stream is incorrect. • Set to logic 1, if the Miller Decoder detects 2 pulses below the minimum time according to the ISO/IEC 14443A definitions.

[1] Command execution will clear all error bits except for bit TempErr. A setting by software is impossible.

All information provided in this document is subject to legal disclaimers.

© NXP B.V. 2013. All rights reserved.

9.2.1.8 Status1Reg

Contains status bits of the CRC, Interrupt and FIFO-buffer.

Table 31. Status1Reg register (address 07h); reset value: XXh, X100X01Xb

	7	6	5	4	3	2	1	0
	RFFreqOK	CRCOk	CRCReady	IRq	TRunning	RFOn	HiAlert	LoAlert
Access Rights	r	r	r	r	r	r	r	r

Table 32. Description of Status1Reg bits

Bit	Symbol	Description
7	RFFreqOK	Indicates if the frequency detected at the RX pin is in the range of 13.56 MHz. Set to logic 1, if the frequency at the RX pin is in the range 12 MHz < RX pin frequency < 15 MHz. Note: The value of RFFreqOK is not defined if the external RF frequency is in the range from 9 to 12 MHz or in the range from 15 to 19 MHz.
6	CRCOk	Set to logic 1, if the CRC Result is zero. For data transmission and reception the bit CRCOk is undefined (use CRCErr in register ErrorReg). CRCOk indicates the status of the CRC co-processor, during calculation the value changes to ZERO, when the calculation is done correctly, the value changes to ONE.
5	CRCReady	Set to logic 1, when the CRC calculation has finished. This bit is only valid for the CRC co-processor calculation using the command CalcCRC.
4	IRq	This bit shows, if any interrupt source requests attention (with respect to the setting of the interrupt enable bits, see register CommIEnReg and DivIEnReg).
3	TRunning	Set to logic 1, if the PN512's timer unit is running, e.g. the timer will decrement the TCounterValReg with the next timer clock. Note: In the gated mode the bit TRunning is set to logic 1, when the timer is enabled by the register bits. This bit is not influenced by the gated signal.
2	RFOn	Set to logic 1, if an external RF field is detected. This bit does not store the state of the RF field.
1	HiAlert	Set to logic 1, when the number of bytes stored in the FIFO-buffer fulfills the following equation: $HiAlert = (64 - FIFOLength) \leq WaterLevel$ Example: FIFOLength = 60, WaterLevel = 4 → HiAlert = 1 FIFOLength = 59, WaterLevel = 4 → HiAlert = 0
0	LoAlert	Set to logic 1, when the number of bytes stored in the FIFO-buffer fulfills the following equation: $LoAlert = FIFOLength \leq WaterLevel$ Example: FIFOLength = 4, WaterLevel = 4 → LoAlert = 1 FIFOLength = 5, WaterLevel = 4 → LoAlert = 0

All information provided in this document is subject to legal disclaimers.

© NXP B.V. 2013. All rights reserved.

9.2.1.9 Status2Reg

Contains status bits of the Receiver, Transmitter and Data mode detector.

Table 33. Status2Reg register (address 08h); reset value: 00h, 00000000b

	7	6	5	4	3	2	1	0
	TempSensClear	I^2CForceHS	0	TargetActivated	MFCrypto1On	Modem State		
Access Rights	r/w	r/w	RFU	dy	dy	r	r	r

Table 34. Description of Status2Reg bits

Bit	Symbol	Description
7	TempSensClear	Set to logic 1, this bit clears the temperature error, if the temperature is below the alarm limit of 125 °C.
6	I^2CForceHS	I^2C input filter settings. Set to logic 1, the I^2C input filter is set to the High-speed mode independent of the I^2C protocol. Set to logic 0, the I^2C input filter is set to the used I^2C protocol.
5	-	Reserved for future use.
4	TargetActivated	Set to logic 1 if the Select command or if the Polling command was answered. Note: This bit can only be set during the AutoColl command in Passive Communication mode. Note: This bit is cleared automatically by switching off the external RF field.
3	MFCrypto1On	This bit indicates that the MIFARE Crypto1 unit is switched on and therefore all data communication with the card is encrypted. This bit can only be set to logic 1 by a successful execution of the MFAuthent Command. This bit is only valid in Reader/Writer mode for MIFARE cards. This bit shall be cleared by software.
2 to 0	Modem State	ModemState shows the state of the transmitter and receiver state machines. **Value** — **Description** 000 — IDLE 001 — Wait for StartSend in register BitFramingReg 010 — TxWait: Wait until RF field is present, if the bit TxWaitRF is set to logic 1. The minimum time for TxWait is defined by the TxWaitReg register. 011 — Sending 100 — RxWait: Wait until RF field is present, if the bit RxWaitRF is set to logic 1. The minimum time for RxWait is defined by the RxWaitReg register. 101 — Wait for data 110 — Receiving

All information provided in this document is subject to legal disclaimers.

© NXP B.V. 2013. All rights reserved.

9.2.1.10 FIFODataReg

In- and output of 64 byte FIFO-buffer.

Table 35. FIFODataReg register (address 09h); reset value: XXh, XXXXXXXXb

	7	6	5	4	3	2	1	0
	FIFOData							
Access Rights	dy	dy	dy	dy	dy	dy	dy	dy

Table 36. Description of FIFODataReg bits

Bit	Symbol	Description
7 to 0	FIFOData	Data input and output port for the internal 64 byte FIFO-buffer. The FIFO-buffer acts as parallel in/parallel out converter for all serial data stream in- and outputs.

9.2.1.11 FIFOLevelReg

Indicates the number of bytes stored in the FIFO.

Table 37. FIFOLevelReg register (address 0Ah); reset value: 00h, 00000000b

	7	6	5	4	3	2	1	0
	FlushBuffer	FIFOLevel						
Access Rights	w	r	r	r	r	r	r	r

Table 38. Description of FIFOLevelReg bits

Bit	Symbol	Description
7	FlushBuffer	Set to logic 1, this bit clears the internal FIFO-buffer's read- and write-pointer and the bit BufferOvfl in the register ErrReg immediately. Reading this bit will always return 0.
6 to 0	FIFOLevel	Indicates the number of bytes stored in the FIFO-buffer. Writing to the FIFODataReg increments, reading decrements the FIFOLevel.

All information provided in this document is subject to legal disclaimers.

© NXP B.V. 2013. All rights reserved.

9.2.1.12 WaterLevelReg

Defines the level for FIFO under- and overflow warning.

Table 39. WaterLevelReg register (address 0Bh); reset value: 08h, 00001000b

	7	6	5	4	3	2	1	0
	0	0	WaterLevel					
Access Rights	RFU	RFU	r/w	r/w	r/w	r/w	r/w	r/w

Table 40. Description of WaterLevelReg bits

Bit	Symbol	Description
7 to 6	-	Reserved for future use.
5 to 0	WaterLevel	This register defines a warning level to indicate a FIFO-buffer over- or underflow: The bit HiAlert in Status1Reg is set to logic 1, if the remaining number of bytes in the FIFO-buffer space is equal or less than the defined number of WaterLevel bytes. The bit LoAlert in Status1Reg is set to logic 1, if equal or less than WaterLevel bytes are in the FIFO. Note: For the calculation of HiAlert and LoAlert see Table 31

9.2.1.13 ControlReg

Miscellaneous control bits.

Table 41. ControlReg register (address 0Ch); reset value: 00h, 00000000b

	7	6	5	4	3	2	1	0
	TStopNow	TStartNow	WrNFCIDtoFIFO	Initiator	0	RxLastBits		
Access Rights	w	w	dy	r/w	RFU	r	r	r

Table 42. Description of ControlReg bits

Bit	Symbol	Description
7	TStopNow	Set to logic 1, the timer stops immediately. Reading this bit will always return 0.
6	TStartNow	Set to logic 1 starts the timer immediately. Reading this bit will always return 0.
5	WrNFCIDtoFIFO	Set to logic 1, the internal stored NFCID (10 bytes) is copied into the FIFO. Afterwards the bit is cleared automatically
4	Initiator	Set to logic 1, the PN512 acts as initiator, otherwise it acts as target
3	-	Reserved for future use.
2 to 0	RxLastBits	Shows the number of valid bits in the last received byte. If zero, the whole byte is valid.

All information provided in this document is subject to legal disclaimers.

© NXP B.V. 2013. All rights reserved.

9.2.1.14 BitFramingReg

Adjustments for bit oriented frames.

Table 43. BitFramingReg register (address 0Dh); reset value: 00h, 00000000b

	7	6	5	4	3	2	1	0
	StartSend		RxAlign		0		TxLastBits	
Access Rights	w	r/w	r/w	r/w	RFU	r/w	r/w	r/w

Table 44. Description of BitFramingReg bits

Bit	Symbol	Description
7	StartSend	Set to logic 1, the transmission of data starts. This bit is only valid in combination with the Transceive command.
6 to 4	RxAlign	Used for reception of bit oriented frames: RxAlign defines the bit position for the first bit received to be stored in the FIFO. Further received bits are stored at the following bit positions. Example: RxAlign = 0: the LSB of the received bit is stored at bit 0, the second received bit is stored at bit position 1. RxAlign = 1: the LSB of the received bit is stored at bit 1, the second received bit is stored at bit position 2. RxAlign = 7: the LSB of the received bit is stored at bit 7, the second received bit is stored in the following byte at bit position 0. This bit shall only be used for bitwise anticollision at 106 kbit/s in Passive Communication mode. In all other modes it shall be set to logic 0.
3	-	Reserved for future use.
2 to 0	TxLastBits	Used for transmission of bit oriented frames: TxLastBits defines the number of bits of the last byte that shall be transmitted. A 000 indicates that all bits of the last byte shall be transmitted.

All information provided in this document is subject to legal disclaimers.

© NXP B.V. 2013. All rights reserved.

9.2.1.15 CollReg

Defines the first bit collision detected on the RF interface.

Table 45. CollReg register (address 0Eh); reset value: XXh, 101XXXXXb

	7	6	5	4	3	2	1	0
	Values AfterColl	0	CollPos NotValid			CollPos		
Access Rights	r/w	RFU	r	r	r	r	r	r

Table 46. Description of CollReg bits

Bit	Symbol	Description
7	ValuesAfterColl	If this bit is set to logic 0, all receiving bits will be cleared after a collision. This bit shall only be used during bitwise anticollision at 106 kbit, otherwise it shall be set to logic 1.
6	-	Reserved for future use.
5	CollPosNotValid	Set to logic 1, if no Collision is detected or the Position of the Collision is out of the range of bits CollPos. This bit shall only be interpreted in Passive Communication mode at 106 kbit or ISO/IEC 14443A/MIFARE Reader/Writer mode.
4 to 0	CollPos	These bits show the bit position of the first detected collision in a received frame, only data bits are interpreted.
		Example: 00h indicates a bit collision in the 32th bit 01h indicates a bit collision in the 1st bit 08h indicates a bit collision in the 8th bit
		These bits shall only be interpreted in Passive Communication mode at 106 kbit or ISO/IEC 14443A/MIFARE Reader/Writer mode if bit CollPosNotValid is set to logic 0.

All information provided in this document is subject to legal disclaimers.

© NXP B.V. 2013. All rights reserved.

9.2.2 Page 1: Communication

9.2.2.1 PageReg

Selects the register page.

Table 47. PageReg register (address 10h); reset value: 00h, 00000000b

	7	6	5	4	3	2	1	0
	UsePage Select	0	0	0	0	0	PageSelect	
Access Rights	r/w	RFU	RFU	RFU	RFU	RFU	r/w	r/w

Table 48. Description of PageReg bits

Bit	Symbol	Description
7	UsePage Select	Set to logic 1, the value of PageSelect is used as register address A5 and A4. The LSB-bits of the register address are defined by the address pins or the internal address latch, respectively. Set to logic 0, the whole content of the internal address latch defines the register address. The address pins are used as described in Section 10.1 “Automatic microcontroller interface detection”.
6 to 2	-	Reserved for future use.
1 to 0	PageSelect	The value of PageSelect is used only, if UsePageSelect is set to logic 1. In this case it specifies the register page (which is A5 and A4 of the register address).

All information provided in this document is subject to legal disclaimers.

© NXP B.V. 2013. All rights reserved.

9.2.2.2 ModeReg

Defines general mode settings for transmitting and receiving.

Table 49. ModeReg register (address 11h); reset value: 3Bh, 00111011b

	7	6	5	4	3	2	1	0
	MSBFirst	Detect Sync	TxWaitRF	RxWaitRF	PolSigin	ModeDetOff	CRCPreset	
Access Rights	r/w	r/w	r/w	r/w	r/w	r/w	r/w	r/w

Table 50. Description of ModeReg bits

Bit	Symbol	Description
7	MSBFirst	Set to logic 1, the CRC co-processor calculates the CRC with MSB first and the CRCResultMSB and the CRCResultLSB in the CRCResultReg register are bit reversed. Note: During RF communication this bit is ignored.
6	Detect Sync	If set to logic 1, the contactless UART waits for the value F0h before the receiver is activated and F0h is added as a Sync-byte for transmission. This bit is only valid for 106 kbit during NFCIP-1 data exchange protocol. In all other modes it shall be set to logic 0.
5	TxWaitRF	Set to logic 1 the transmitter in reader/writer or initiator mode for NFCIP-1 can only be started, if an RF field is generated.
4	RxWaitRF	Set to logic 1, the counter for RxWait starts only if an external RF field is detected in Target mode for NFCIP-1 or in Card Communication mode.
3	PolSigin	PolSigin defines the polarity of the SIGIN pin. Set to logic 1, the polarity of SIGIN pin is active high. Set to logic 0 the polarity of SIGIN pin is active low. Note: The internal envelope signal is coded active low. Note: Changing this bit will generate a SiginActIRq event.
2	ModeDetOff	Set to logic 1, the internal mode detector is switched off. Note: The mode detector is only active during the AutoColl command.
1 to 0	CRCPreset	Defines the preset value for the CRC co-processor for the command CalCRC. Note: During any communication, the preset values is selected automatically according to the definition in the bits RxMode and TxMode. **Value** — **Description** 00 — 0000 01 — 6363 10 — A671 11 — FFFF

All information provided in this document is subject to legal disclaimers.

© NXP B.V. 2013. All rights reserved.

9.2.2.3 TxModeReg

Defines the data rate and framing during transmission.

Table 51. TxModeReg register (address 12h); reset value: 00h, 00000000b

	7	6	5	4	3	2	1	0
	TxCRCEn		TxSpeed		InvMod	TxMix	TxFraming	
Access Rights	r/w	dy	dy	dy	r/w	r/w	dy	dy

Table 52. Description of TxModeReg bits

Bit	Symbol	Description
7	TxCRCEn	Set to logic 1, this bit enables the CRC generation during data transmission. Note: This bit shall only be set to logic 0 at 106 kbit.
6 to 4	TxSpeed	Defines the bit rate while data transmission. **Value** — **Description** 000 — 106 kbit 001 — 212 kbit 010 — 424 kbit 011 — 848 kbit 100 — 1696 kbit 101 — 3392 kbit 110 — Reserved 111 — Reserved Note: The bit coding for transfer speeds above 424 kbit is equivalent to the bit coding of Active Communication mode 424 kbit (Ecma 340).
3	InvMod	Set to logic 1, the modulation for transmitting data is inverted.
2	TxMix	Set to logic 1, the signal at pin SIGIN is mixed with the internal coder (see Section 12.6 “S^{2}C interface support”).
1 to 0	TxFraming	Defines the framing used for data transmission. **Value** — **Description** 00 — ISO/IEC 14443A/MIFARE and Passive Communication mode 106 kbit 01 — Active Communication mode 10 — FeliCa and Passive communication mode 212 and 424 kbit 11 — ISO/IEC 14443B

All information provided in this document is subject to legal disclaimers.

© NXP B.V. 2013. All rights reserved.

9.2.2.4 RxModeReg

Defines the data rate and framing during reception.

Table 53. RxModeReg register (address 13h); reset value: 00h, 00000000b

	7	6	5	4	3	2	1	0
	RxCRCEn		RxSpeed		RxNoErr	RxMultiple	RxFraming	
Access Rights	r/w	dy	dy	dy	r/w	r/w	dy	dy

Table 54. Description of RxModeReg bits

Bit	Symbol	Description
7	RxCRCEn	Set to logic 1, this bit enables the CRC calculation during reception. Note: This bit shall only be set to logic 0 at 106 kbit.
6 to 4	RxSpeed	Defines the bit rate while data transmission. The PN512's analog part handles only transfer speeds up to 424 kbit internally, the digital UART handles the higher transfer speeds as well. **Value** / **Description** 000 / 106 kbit 001 / 212 kbit 010 / 424 kbit 011 / 848 kbit 100 / 1696 kbit 101 / 3392 kbit 110 / Reserved 111 / Reserved Note: The bit coding for transfer speeds above 424 kbit is equivalent to the bit coding of Active Communication mode 424 kbit (Ecma 340).
3	RxNoErr	If set to logic 1 a not valid received data stream (less than 4 bits received) will be ignored. The receiver will remain active. For ISO/IEC14443B also RxSOFReq logic 1 is required to ignore a non valid datastream.
2	RxMultiple	Set to logic 0, the receiver is deactivated after receiving a data frame. Set to logic 1, it is possible to receive more than one data frame. Having set this bit, the receive and transceive commands will not terminate automatically. In this case the multiple receiving can only be deactivated by writing any command (except the Receive command) to the CommandReg register or by clearing the bit by the host controller. At the end of a received data stream an error byte is added to the FIFO. The error byte is a copy of the ErrorReg register. The behaviour for version 1.0 is described in Section 21 "Errata sheet" on page 109.

All information provided in this document is subject to legal disclaimers.

© NXP B.V. 2013. All rights reserved.

Table 54. Description of RxModeReg bits

Bit	Symbol	Description	
1 to 0	RxFraming	Defines the expected framing for data reception.	
		Value	**Description**
		00	ISO/IEC 14443A/MIFARE and Passive Communication mode 106 kbit
		01	Active Communication mode
		10	FeliCa and Passive Communication mode 212 and 424 kbit
		11	ISO/IEC 14443B

9.2.2.5 TxControlReg

Controls the logical behavior of the antenna driver pins Tx1 and Tx2.

Table 55. TxControlReg register (address 14h); reset value: 80h, 10000000b

	7	6	5	4	3	2	1	0
	InvTx2RF On	InvTx1RF On	InvTx2RF Off	InvTx1RF Off	Tx2CW	CheckRF	Tx2RF En	Tx1RF En
Access Rights	r/w	r/w	r/w	r/w	r/w	w	r/w	r/w

Table 56. Description of TxControlReg bits

Bit	Symbol	Description
7	InvTx2RFOn	Set to logic 1, the output signal at pin TX2 will be inverted, if driver TX2 is enabled.
6	InvTx1RFOn	Set to logic 1, the output signal at pin TX1 will be inverted, if driver TX1 is enabled.
5	InvTx2RFOff	Set to logic 1, the output signal at pin TX2 will be inverted, if driver TX2 is disabled.
4	InvTx1RFOff	Set to logic 1, the output signal at pin TX1 will be inverted, if driver TX1 is disabled.
3	Tx2CW	Set to logic 1, the output signal on pin TX2 will deliver continuously the un-modulated 13.56 MHz energy carrier. Set to logic 0, Tx2CW is enabled to modulate the 13.56 MHz energy carrier.
2	CheckRF	Set to logic 1, Tx2RFEn and Tx1RFEn can not be set if an external RF field is detected. Only valid when using in combination with bit Tx2RFEn or Tx1RFEn
1	Tx2RFEn	Set to logic 1, the output signal on pin TX2 will deliver the 13.56 MHz energy carrier modulated by the transmission data.
0	Tx1RFEn	Set to logic 1, the output signal on pin TX1 will deliver the 13.56 MHz energy carrier modulated by the transmission data.

All information provided in this document is subject to legal disclaimers.

© NXP B.V. 2013. All rights reserved.

9.2.2.6 TxAutoReg

Controls the settings of the antenna driver.

Table 57. TxAutoReg register (address 15h); reset value: 00h, 00000000b

	7	6	5	4	3	2	1	0
	AutoRF OFF	Force100 ASK	Auto WakeUp	0	CAOn	InitialRF On	Tx2RFAut oEn	Tx1RFAuto En
Access Rights	r/w	r/w	r/w	RFU	r/w	r/w	r/w	r/w

Table 58. Description of TxAutoReg bits

Bit	Symbol	Description
7	AutoRFOFF	Set to logic 1, all active antenna drivers are switched off after the last data bit has been transmitted as defined in the NFCIP-1.
6	Force100ASK	Set to logic 1, Force100ASK forces a 100% ASK modulation independent of the setting in register ModGsPReg.
5	AutoWakeUp	Set to logic 1, the PN512 in soft Power-down mode will be started by the RF level detector.
4	-	Reserved for future use.
3	CAOn	Set to logic 1, the collision avoidance is activated and internally the value n is set in accordance to the NFCIP-1 Standard.
2	InitialRFOn	Set to logic 1, the initial RF collision avoidance is performed and the bit InitialRFOn is cleared automatically, if the RF is switched on. Note: The driver, which should be switched on, has to be enabled by bit Tx2RFAutoEn or bit Tx1RFAutoEn.
1	Tx2RFAutoEn	Set to logic 1, the driver Tx2 is switched on after the external RF field is switched off according to the time TADT. If the bits InitialRFOn and Tx2RFAutoEn are set to logic 1, Tx2 is switched on if no external RF field is detected during the time TIDT. Note: The times TADT and TIDT are defined in the NFC IP-1 standard (ISO/IEC 18092).
0	Tx1RFAutoEn	Set to logic 1, the driver Tx1 is switched on after the external RF field is switched off according to the time TADT. If the bit InitialRFOn and Tx1RFAutoEn are set to logic 1, Tx1 is switched on if no external RF field is detected during the time TIDT. Note: The times TADT and TIDT are defined in the NFC IP-1 standard (ISO/IEC 18092).

All information provided in this document is subject to legal disclaimers.

© NXP B.V. 2013. All rights reserved.

9.2.2.7 TxSelReg

Selects the sources for the analog part.

Table 59. TxSelReg register (address 16h); reset value: 10h, 00010000b

	7	6	5	4	3	2	1	0
	0	0	DriverSel		SigOutSel			
Access Rights	RFU	RFU	r/w	r/w	r/w	r/w	r/w	r/w

Table 60. Description of TxSelReg bits

Bit	Symbol	Description	
7 to 6	-	Reserved for future use.	
5 to 4	DriverSel	Selects the input of driver Tx1 and Tx2.	
		Value	**Description**
		00	Tristate Note: In soft power down the drivers are only in Tristate mode if DriverSel is set to Tristate mode.
		01	Modulation signal (envelope) from the internal coder
		10	Modulation signal (envelope) from SIGIN
		11	HIGH Note: The HIGH level depends on the setting of InvTx1RFOn/InvTx1RFOff and InvTx2RFOn/InvTx2RFOff.

All information provided in this document is subject to legal disclaimers.

© NXP B.V. 2013. All rights reserved.

Table 60. Description of TxSelReg bits *...continued*

Bit	Symbol	Description	
3 to 0	SigOutSel	Selects the input for the SIGOUT Pin.	
		Value	**Description**
		0000	Tristate
		0001	Low
		0010	High
		0011	TestBus signal as defined by bit TestBusBitSel in register TestSel1Reg.
		0100	Modulation signal (envelope) from the internal coder
		0101	Serial data stream to be transmitted
		0110	Output signal of the receiver circuit (card modulation signal regenerated and delayed). This signal is used as data output signal for SAM interface connection using 3 lines. Note: To have a valid signal the PN512 has to be set to the receiving mode by either the Transceive or Receive command. The bit RxMultiple can be used to keep the PN512 in receiving mode. Note: Do not use this setting in MIFARE mode. Manchester coding as data collisions will not be transmitted on the SIGOUT line.
		0111	Serial data stream received. Note: Do not use this setting in MIFARE mode. Miller coding parameters as the bit length can vary.
		1000-1011	FeliCa Sam modulation 1000 RX* 1001 TX 1010 Demodulator comparator output 1011 RFU Note: * To have a valid signal the PN512 has to be set to the receiving mode by either the Transceive or Receive command. The bit RxMultiple can be used to keep the PN512 in receiving mode.
		1100-1111	MIFARE Sam modulation 1100 RX* with RF carrier 1101 TX with RF carrier 1110 RX with RF carrier un-filtered 1111 RX envelope un-filtered Note: *To have a valid signal the PN512 has to be set to the receiving mode by either the Transceive or Receive command. The bit RxMultiple can be used to keep the PN512 in receiving mode.

All information provided in this document is subject to legal disclaimers.

© NXP B.V. 2013. All rights reserved.

9.2.2.8 RxSelReg

Selects internal receiver settings.

Table 61. RxSelReg register (address 17h); reset value: 84h, 10000100b

	7	6	5	4	3	2	1	0
	UartSel				RxWait			
Access Rights	r/w	r/w	r/w	r/w	r/w	r/w	r/w	r/w

Table 62. Description of RxSelReg bits

Bit	Symbol	Description
7 to 6	UartSel	Selects the input of the contactless UART **Value** — **Description** 00 — Constant Low 01 — Envelope signal at SIGIN 10 — Modulation signal from the internal analog part 11 — Modulation signal from SIGIN pin. Only valid for transfer speeds above 424 kbit
5 to 0	RxWait	After data transmission, the activation of the receiver is delayed for RxWait bit-clocks. During this 'frame guard time' any signal at pin RX is ignored. This parameter is ignored by the Receive command. All other commands (e.g. Transceive, Autocoll, MFAuthent) use this parameter. Depending on the mode of the PN512, the counter starts different. In Passive Communication mode the counter starts with the last modulation pulse of the transmitted data stream. In Active Communication mode the counter starts immediately after the external RF field is switched on.

9.2.2.9 RxThresholdReg

Selects thresholds for the bit decoder.

Table 63. RxThresholdReg register (address 18h); reset value: 84h, 10000100b

	7	6	5	4	3	2	1	0
	MinLevel				0	CollLevel		
Access Rights	r/w	r/w	r/w	r/w	RFU	r/w	r/w	r/w

Table 64. Description of RxThresholdReg bits

Bit	Symbol	Description
7 to 4	MinLevel	Defines the minimum signal strength at the decoder input that shall be accepted. If the signal strength is below this level, it is not evaluated.
3	-	Reserved for future use.
2 to 0	CollLevel	Defines the minimum signal strength at the decoder input that has to be reached by the weaker half-bit of the Manchester-coded signal to generate a bit-collision relatively to the amplitude of the stronger half-bit.

All information provided in this document is subject to legal disclaimers.

© NXP B.V. 2013. All rights reserved.

9.2.2.10 DemodReg

Defines demodulator settings.

Table 65. DemodReg register (address 19h); reset value: 4Dh, 01001101b

	7	6	5	4	3	2	1	0
	AddIQ		FixIQ	TPrescalEven	TauRcv		TauSync	
Access Rights	r/w	r/w	r/w	r/w	r/w	r/w	r/w	r/w

Table 66. Description of DemodReg bits

Bit	Symbol	Description
7 to 6	AddIQ	Defines the use of I and Q channel during reception Note: FixIQ has to be set to logic 0 to enable the following settings. **Value** — **Description** 00 — Select the stronger channel 01 — Select the stronger and freeze the selected during communication 10 — combines the I and Q channel 11 — Reserved
5	FixIQ	If set to logic 1 and the bits of AddIQ are set to X0, the reception is fixed to I channel. If set to logic 1 and the bits of AddIQ are set to X1, the reception is fixed to Q channel. NOTE: If SIGIN/SIGOUT is used as S2C interface FixIQ set to 1 and AddIQ set to X0 is rewired.
4	TPrescalEven	If set to logic 0 the following formula is used to calculate fTimer of the prescaler: f_{Timer} = 13.56 MHz / (2 * TPreScaler + 1). If set to logic 1 the following formula is used to calculate fTimer of the prescaler: fTimer = 13.56 MHz / (2 * TPreScaler + 2). (Default TPrescalEven is logic 0) The behaviour for the version 1.0 is described in Section 21 “Errata sheet” on page 109.
3 to 2	TauRcv	Changes the time constant of the internal during data reception. Note: If set to 00, the PLL is frozen during data reception.
1 to 0	TauSync	Changes the time constant of the internal PLL during burst.

All information provided in this document is subject to legal disclaimers.

© NXP B.V. 2013. All rights reserved.

9.2.2.11 FelNFC1Reg

Defines the length of the FeliCa Sync bytes and the minimum length of the received packet.

Table 67. FelNFC1Reg register (address 1Ah); reset value: 00h, 00000000b

	7	6	5	4	3	2	1	0
	FelSyncLen				DataLenMin			
Access Rights	r/w	r/w	r/w	r/w	r/w	r/w	r/w	r/w

Table 68. Description of FelNFC1Reg bits

Bit	Symbol	Description
7 to 6	FelSyncLen	Defines the length of the Sync bytes. **Value** — **Sync- bytes in hex** 00 — B2 4D 01 — 00 B2 4D 10 — 00 00 B2 4D 11 — 00 00 00 B2 4D
5 to 0	DataLenMin	These bits define the minimum length of the accepted packet length: DataLenMin * 4 ≤ data packet length This parameter is ignored at 106 kbit if the bit DetectSync in register ModeReg is set to logic 0. If a received data packet is shorter than the defined DataLenMin value, the data packet will be ignored.

All information provided in this document is subject to legal disclaimers.

© NXP B.V. 2013. All rights reserved.

9.2.2.12 FelNFC2Reg

Defines the maximum length of the received packet.

Table 69. FelNFC2Reg register (address1Bh); reset value: 00h, 00000000b

	7	6	5	4	3	2	1	0
	WaitForSelected	ShortTimeSlot	DataLenMax					
Access Rights	r/w	r/w	r/w	r/w	r/w	r/w	r/w	r/w

Table 70. Description of FelNFC2Reg bits

Bit	Symbol	Description
7	WaitForSelected	Set to logic 1, the AutoColl command is only terminated automatically when: 1. A valid command has been received after performing a valid Select procedure according ISO/IEC 14443A. 2. A valid command has been received after performing a valid Polling procedure according to the FeliCa specification. Note: If this bit is set, no active communication is possible. Note: Setting this bit reduces the host controller interaction in case of a communication to another device in the same RF field during Passive Communication mode.
6	ShortTimeSlot	Defines the time slot length for Passive Communication mode at 424 kbit. Set to logic 1 a short time slot is used (half of the timeslot at 212 kbit). Set to logic 0 a long timeslot is used (equal to the timeslot for 212 kbit).
5 to 0	DataLenMax	These bits define the maximum length of the accepted packet length: DataLenMax * 4 ≥ data packet length Note: If set to logic 0 the maximum data length is 256 bytes. This parameter is ignored at 106 kbit if the bit DetectSync in register ModeReg is set to logic 0. If a received packet is larger than the defined DataLenMax value, the packet will be ignored.

All information provided in this document is subject to legal disclaimers.

© NXP B.V. 2013. All rights reserved.

9.2.2.13 MifNFCReg

Defines ISO/IEC 14443A/MIFARE/NFC specific settings in target or Card Operating mode.

Table 71. MifNFCReg register (address 1Ch); reset value: 62h, 01100010b

	7	6	5	4	3	2	1	0
	SensMiller			TauMiller		MFHalted	TxWait	
Access Rights	r/w	r/w	r/w	r/w	r/w	r/w	r/w	r/w

Table 72. Description of MifNFCReg bits

Bit	Symbol	Description
7 to 5	SensMiller	These bits define the sensitivity of the Miller decoder.
4 to 3	TauMiller	These bits define the time constant of the Miller decoder.
2	MFHalted	Set to logic 1, this bit indicates that the PN512 is set to HALT mode in Card Operation mode at 106 kbit. This bit is either set by the host controller or by the internal state machine and indicates that only the code 52h is accepted as a request command. This bit is cleared automatically by a RF reset.
1 to 0	TxWait	These bits define the minimum response time between receive and transmit in number of data bits + 7 data bits. The shortest possible minimum response time is 7 data bits. (TxWait=0). The minimum response time can be increased by the number of bits defined in TxWait. The longest minimum response time is 10 data bits (TxWait = 3). If a transmission of a frame is started before the minimum response time is over, the PN512 waits before transmitting the data until the minimum response time is over. If a transmission of a frame is started after the minimum response time is over, the frame is started immediately if the data bit synchronization is correct. (adjustable with TxBitPhase).

All information provided in this document is subject to legal disclaimers.

© NXP B.V. 2013. All rights reserved.

9.2.2.14 ManualRCVReg

Allows manual fine tuning of the internal receiver.

Remark: For standard applications it is not recommended to change this register settings.

Table 73. ManualRCVReg register (address 1Dh); reset value: 00h, 00000000b

	7	6	5	4	3	2	1	0
	0	FastFilt MF_SO	Delay MF_SO	Parity Disable	LargeBW PLL	Manual HPCF	HPFC	
Access Rights	RFU	r/w	r/w	r/w	r/w	r/w	r/w	r/w

Table 74. Description of ManualRCVReg bits

Bit	Symbol	Description
7	-	Reserved for future use.
6	FastFilt MF_SO	If this bit is set to logic 1, the internal filter for the Miller-Delay Circuit is set to Fast mode. Note: This bit should only set to logic 1, if Millerpulses of less than 400 ns Pulse length are expected. At 106 kBaud the typical value is 3 us.
5	Delay MF_SO	If this bit is set to logic 1, the Signal at SIGOUT-pin is delayed, so that in SAM mode the Signal at SIGIN must be 128/fc faster compared to the ISO/IEC 14443A, to reach the ISO/IEC 14443A restrictions on the RF-Field. Note: This delay shall only be activated for setting bits SigOutSel to (1110b) or (1111b) in register TxSelReg.
4	Parity Disable	If this bit is set to logic 1, the generation of the Parity bit for transmission and the Parity-Check for receiving is switched off. The received Parity bit is handled like a data bit.
3	LargeBWPLL	Set to logic 1, the bandwidth of the internal PLL used for clock recovery is extended.
2	ManualHPCF	Set to logic 0, the HPCF bits are ignored and the HPCF settings are adapted automatically to the receiving mode. Set to logic 1, values of HPCF are valid.
1 to 0	HPFC	Selects the High Pass Corner Frequency (HPCF) of the filter in the internal receiver chain 00 For signals with frequency spectrum down to 106 kHz. 01 For signals with frequency spectrum down to 212 kHz. 10 For signals with frequency spectrum down to 424 kHz. 11 For signals with frequency spectrum down to 848 kHz

All information provided in this document is subject to legal disclaimers.

© NXP B.V. 2013. All rights reserved.

9.2.2.15 TypeBReg

Table 75. TypeBReg register (address 1Eh); reset value: 00h, 00000000b

	7	6	5	4	3	2	1	0
	RxSOF Req	RxEOF Req	0	EOFSO FWidth	NoTxSOF	NoTxEOF	TxEGT	
Access Rights	r/w	r/w	RFU	r/w	r/w	r/w	r/w	r/w

Table 76. Description of TypeBReg bits

Bit	Symbol	Description
7	RxSOFReq	If this bit is set to logic 1, the SOF is required. A datastream starting without SOF is ignored. If this bit is cleared, a datastream with and without SOF is accepted. The SOF will be removed and not written into the FIFO.
6	RxEOFReq	If this bit is set to logic 1, the EOF is required. A datastream ending without EOF will generate a Protocol-Error. If this bit is cleared, a datastream with and without EOF is accepted. The EOF will be removed and not written into the FIFO. For the behaviour in version 1.0, see Section 21 “Errata sheet” on page 109.
5	-	Reserved for future use.
4	EOFSOFWidth	If this bit is set to logic 1 and EOFSOFAdjust bit is logic 0, the SOF and EOF will have the maximum length defined in ISO/IEC 14443B. If this bit is cleared and EOFSOFAdjust bit is logic 0, the SOF and EOF will have the minimum length defined in ISO/IEC 14443B. If this bit is set to 1 and the EOFSOFadjust bit is logic 1 will result in SOF low = (11etu – 8 cycles)/fc SOF high = (2 etu + 8 cycles)/fc EOF low = (11 etu – 8 cycles)/fc If this bit is set to 0 and the EOFSOFAdjust bit is logic 1 will result in an incorrect system behavior in respect to ISO specification. For the behaviour in version 1.0, see Section 21 “Errata sheet” on page 109.
3	NoTxSOF	If this bit is set to logic 1, the generation of the SOF is suppressed.
2	NoTxEOF	If this bit is set to logic 1, the generation of the EOF is suppressed.
1 to 0	TxEGT	These bits define the length of the EGT. Value Description 00 0 bit 01 1 bit 10 2 bits 11 3 bits

9.2.2.16 SerialSpeedReg

Selects the speed of the serial UART interface.

All information provided in this document is subject to legal disclaimers.

© NXP B.V. 2013. All rights reserved.

Table 77. SerialSpeedReg register (address 1Fh); reset value: EBh, 11101011b

	7	6	5	4	3	2	1	0
	BR_T0				BR_T1			
Access Rights	r/w	r/w	r/w	r/w	r/w	r/w	r/w	r/w

Table 78. Description of SerialSpeedReg bits

Bit	Symbol	Description
7 to 5	BR_T0	Factor BR_T0 to adjust the transfer speed, for description see Section 10.3.2 “Selectable UART transfer speeds”.
3 to 0	BR_T1	Factor BR_T1 to adjust the transfer speed, for description see Section 10.3.2 “Selectable UART transfer speeds”.

All information provided in this document is subject to legal disclaimers.

© NXP B.V. 2013. All rights reserved.

9.2.3 Page 2: Configuration

9.2.3.1 PageReg

Selects the register page.

Table 79. PageReg register (address 20h); reset value: 00h, 00000000b

	7	6	5	4	3	2	1	0
	UsePageSelect	0	0	0	0	0	PageSelect	
Access Rights	r/w	RFU	RFU	RFU	RFU	RFU	r/w	r/w

Table 80. Description of PageReg bits

Bit	Symbol	Description
7	UsePageSelect	Set to logic 1, the value of PageSelect is used as register address A5 and A4. The LSB-bits of the register address are defined by the address pins or the internal address latch, respectively. Set to logic 0, the whole content of the internal address latch defines the register address. The address pins are used as described in Section 10.1 “Automatic microcontroller interface detection”.
6 to 2	-	Reserved for future use.
1 to 0	PageSelect	The value of PageSelect is used only if UsePageSelect is set to logic 1. In this case, it specifies the register page (which is A5 and A4of the register address).

9.2.3.2 CRCResultReg

Shows the actual MSB and LSB values of the CRC calculation.

Note: The CRC is split into two 8-bit register.

Note: Setting the bit MSBFirst in ModeReg register reverses the bit order, the byte order is not changed.

Table 81. CRCResultReg register (address 21h); reset value: FFh, 11111111b

	7	6	5	4	3	2	1	0
	CRCResultMSB							
Access Rights	r	r	r	r	r	r	r	r

Table 82. Description of CRCResultReg bits

Bit	Symbol	Description
7 to 0	CRCResultMSB	This register shows the actual value of the most significant byte of the CRCResultReg register. It is valid only if bit CRCReady in register Status1Reg is set to logic 1.

Table 83. CRCResultReg register (address 22h); reset value: FFh, 11111111b

	7	6	5	4	3	2	1	0
	CRCResultLSB							
Access Rights	r	r	r	r	r	r	r	r

Table 84. Description of CRCResultReg bits

Bit	Symbol	Description
7 to 0	CRCResultLSB	This register shows the actual value of the least significant byte of the CRCResult register. It is valid only if bit CRCReady in register Status1Reg is set to logic 1.

All information provided in this document is subject to legal disclaimers.

© NXP B.V. 2013. All rights reserved.

9.2.3.3 GsNOffReg

Selects the conductance for the N-driver of the antenna driver pins TX1 and TX2 when the driver is switched off.

Table 85. GsNOffReg register (address 23h); reset value: 88h, 10001000b

	7	6	5	4	3	2	1	0
	CWGsNOff				ModGsNOff			
Access Rights	r/w	r/w	r/w	r/w	r/w	r/w	r/w	r/w

Table 86. Description of GsNOffReg bits

Bit	Symbol	Description
7 to 4	CWGsNOff	The value of this register defines the conductance of the output N-driver during times of no modulation. Note: The conductance value is binary weighted. Note: During soft Power-down mode the highest bit is forced to 1. Note: The value of the register is only used if the driver is switched off. Otherwise the bit value CWGsNOn of register GsNOnReg is used. Note: This value is used for LoadModulation.
3 to 0	ModGsNOff	The value of this register defines the conductance of the output N-driver for the time of modulation. This may be used to regulate the modulation index. Note: The conductance value is binary weighted. Note: During soft Power-down mode the highest bit is forced to 1. Note: The value of the register is only used if the driver is switched off. Otherwise the bit value ModGsNOn of register GsNOnReg is used Note: This value is used for LoadModulation.

All information provided in this document is subject to legal disclaimers.

© NXP B.V. 2013. All rights reserved.

9.2.3.4 ModWidthReg

Controls the modulation width settings.

Table 87. ModWidthReg register (address 24h); reset value: 26h, 00100110b

	7	6	5	4	3	2	1	0
	ModWidth							
Access Rights	r/w	r/w	r/w	r/w	r/w	r/w	r/w	r/w

Table 88. Description of ModWidthReg bits

Bit	Symbol	Description
7 to 0	ModWidth	These bits define the width of the Miller modulation as initiator in Active and Passive Communication mode as multiples of the carrier frequency (ModWidth + 1/fc). The maximum value is half the bit period. Acting as a target in Passive Communication mode at 106 kbit or in Card Operating mode for ISO/IEC 14443A/MIFARE these bits are used to change the duty cycle of the subcarrier frequency. The resulting number of carrier periods are calculated according to the following formulas: LOW value: #clocksLOW = (ModWidth modulo 8) + 1. HIGH value: #clocksHIGH = 16-#clocksLOW.

9.2.3.5 TxBitPhaseReg

Adjust the bitphase at 106 kbit during transmission.

Table 89. TxBitPhaseReg register (address 25h); reset value: 87h, 10000111b

	7	6	5	4	3	2	1	0
	RcvClkChange	TxBitPhase						
Access Rights	r/w	r/w	r/w	r/w	r/w	r/w	r/w	r/w

Table 90. Description of TxBitPhaseReg bits

Bit	Symbol	Description
7	RcvClkChange	Set to logic 1, the demodulator's clock is derived by the external RF field.
6 to 0	TxBitPhase	These bits are representing the number of carrier frequency clock cycles, which are added to the waiting period before transmitting data in all communication modes. TXBitPhase is used to adjust the TX bit synchronization during passive NFCIP-1 communication mode at 106 kbit and in ISO/IEC 14443A/MIFARE card mode.

All information provided in this document is subject to legal disclaimers.

© NXP B.V. 2013. All rights reserved.

9.2.3.6 RFCfgReg

Configures the receiver gain and RF level detector sensitivity.

Table 91. RFCfgReg register (address 26h); reset value: 48h, 01001000b

	7	6	5	4	3	2	1	0
	RFLevelAmp		RxGain				RFLevel	
Access Rights	r/w	r/w	r/w	r/w	r/w	r/w	r/w	r/w

Table 92. Description of RFCfgReg bits

Bit	Symbol	Description	
7	RFLevelAmp	Set to logic 1, this bit activates the RF level detectors' amplifier.	
6 to 4	RxGain	This register defines the receivers signal voltage gain factor:	
		Value	**Description**
		000	18 dB
		001	23 dB
		010	18 dB
		011	23 dB
		100	33 dB
		101	38 dB
		110	43 dB
		111	48 dB
3 to 0	RFLevel	Defines the sensitivity of the RF level detector, for description see Section 12.3 "RF level detector".	

All information provided in this document is subject to legal disclaimers.

© NXP B.V. 2013. All rights reserved.

9.2.3.7 GsNOnReg

Selects the conductance for the N-driver of the antenna driver pins TX1 and TX2 when the driver is switched on.

Table 93. GsNOnReg register (address 27h); reset value: 88h, 10001000b

	7	6	5	4	3	2	1	0
	CWGsNOn				ModGsNOn			
Access Rights	r/w	r/w	r/w	r/w	r/w	r/w	r/w	r/w

Table 94. Description of GsNOnReg bits

Bit	Symbol	Description
7 to 4	CWGsNOn	The value of this register defines the conductance of the output N-driver during times of no modulation. This may be used to regulate the output power and subsequently current consumption and operating distance. Note: The conductance value is binary weighted. Note: During soft Power-down mode the highest bit is forced to 1. Note: This value is only used if the driver TX1 or TX2 are switched on. Otherwise the value of the bits CWGsNOff of register GsNOffReg is used.
3 to 0	ModGsNOn	The value of this register defines the conductance of the output N-driver for the time of modulation. This may be used to regulate the modulation index. Note: The conductance value is binary weighted. Note: During soft Power-down mode the highest bit is forced to 1. Note: This value is only used if the driver TX1 or Tx2 are switched on. Otherwise the value of the bits ModsNOff of register GsNOffReg is used.

9.2.3.8 CWGsPReg

Defines the conductance of the P-driver during times of no modulation

Table 95. CWGsPReg register (address 28h); reset value: 20h, 00100000b

	7	6	5	4	3	2	1	0
	0	0	CWGsP					
Access Rights	RFU	RFU	r/w	r/w	r/w	r/w	r/w	r/w

Table 96. Description of CWGsPReg bits

Bit	Symbol	Description
7 to 6	-	Reserved for future use.
5 to 0	CWGsP	The value of this register defines the conductance of the output P-driver. This may be used to regulate the output power and subsequently current consumption and operating distance. Note: The conductance value is binary weighted. Note: During soft Power-down mode the highest bit is forced to 1.

All information provided in this document is subject to legal disclaimers.

© NXP B.V. 2013. All rights reserved.

9.2.3.9 ModGsPReg

Defines the driver P-output conductance during modulation.

Table 97. ModGsPReg register (address 29h); reset value: 20h, 00100000b

	7	6	5	4	3	2	1	0
	0	0	ModGsP					
Access Rights	RFU	RFU	r/w	r/w	r/w	r/w	r/w	r/w

Table 98. Description of ModGsPReg bits

Bit	Symbol	Description
7 to 6	-	Reserved for future use.
5 to 0	ModGsP[1]	The value of this register defines the conductance of the output P-driver for the time of modulation. This may be used to regulate the modulation index. Note: The conductance value is binary weighted. Note: During soft Power-down mode the highest bit is forced to 1.

[1] If Force100ASK is set to logic 1, the value of ModGsP has no effect.

9.2.3.10 TMode Register, TPrescaler Register

Defines settings for the timer.

Note: The Prescaler value is split into two 8-bit registers

Table 99. TModeReg register (address 2Ah); reset value: 00h, 00000000b

	7	6	5	4	3	2	1	0
	TAuto	TGated		TAutoRestart	TPrescaler_Hi			
Access Rights	r/w	r/w	r/w	r/w	r/w	r/w	r/w	r/w

Table 100. Description of TModeReg bits

Bit	Symbol	Description
7	TAuto	Set to logic 1, the timer starts automatically at the end of the transmission in all communication modes at all speeds or when bit InitialRFOn is set to logic 1 and the RF field is switched on. In mode MIFARE and ISO14443-B 106kbit/s the timer stops after the 5th bit (1 startbit, 4 databits) if the bit RxMultiple in the register RxModeReg is not set. In all other modes, the timer stops after the 4th bit if the bit RxMultiple the register RxModeReg is not set. If RxMultiple is set to logic 1, the timer never stops. In this case the timer can be stopped by setting the bit TStopNow in register ControlReg to 1. Set to logic 0 indicates, that the timer is not influenced by the protocol.

All information provided in this document is subject to legal disclaimers.

© NXP B.V. 2013. All rights reserved.

Table 100. Description of TModeReg bits *...continued*

Bit	Symbol	Description
6 to 5	TGated	The internal timer is running in gated mode. Note: In the gated mode, the bit TRunning is 1 when the timer is enabled by the register bits. This bit does not influence the gating signal. **Value** — **Description** 00 — Non gated mode 01 — Gated by SIGIN 10 — Gated by AUX1 11 — Gated by A3
4	TAutoRestart	Set to logic 1, the timer automatically restart its count-down from TReloadValue, instead of counting down to zero. Set to logic 0 the timer decrements to ZERO and the bit TimerIRq is set to logic 1.
3 to 0	TPrescaler_Hi	Defines higher 4 bits for TPrescaler. The following formula is used to calculate f_{Timer} if TPrescalEven bit in Demot Reg is set to logic 0: f_{Timer} = 13.56 MHz/(2*TPreScaler+1). Where TPreScaler = [TPrescaler_Hi:TPrescaler_Lo] (TPrescaler value on 12 bits) (Default TPrescalEven is logic 0) The following formula is used to calculate fTimer if TPrescalEven bit in Demot Reg is set to logic 1: f_{Timer} = 13.56 MHz/(2*TPreScaler+2). For detailed description see Section 15 “Timer unit”. For the behaviour within version 1.0, see Section 21 “Errata sheet” on page 109.

Table 101. TPrescalerReg register (address 2Bh); reset value: 00h, 00000000b

	7	6	5	4	3	2	1	0
				TPrescaler_Lo				
Access Rights	r/w	r/w	r/w	r/w	r/w	r/w	r/w	r/w

Table 102. Description of TPrescalerReg bits

Bit	Symbol	Description
7 to 0	TPrescaler_Lo	Defines lower 8 bits for TPrescaler. The following formula is used to calculate f_{Timer} if TPrescalEven bit in Demot Reg is set to logic 0: f_{Timer} = 13.56 MHz/(2*TPreScaler+1). Where TPreScaler = [TPrescaler_Hi:TPrescaler_Lo] (TPrescaler value on 12 bits) The following formula is used to calculate fTimer if TPrescalEven bit in Demot Reg is set to logic 1: f_{Timer} = 13.56 MHz/(2*TPreScaler+2). Where TPreScaler = [TPrescaler_Hi:TPrescaler_Lo] (TPrescaler value on 12 bits) For detailed description see Section 15 “Timer unit”.

All information provided in this document is subject to legal disclaimers.

© NXP B.V. 2013. All rights reserved.

9.2.3.11 TReloadReg

Describes the 16-bit long timer reload value.

Note: The Reload value is split into two 8-bit registers.

Table 103. TReloadReg (Higher bits) register (address 2Ch); reset value: 00h, 00000000b

	7	6	5	4	3	2	1	0
	TReloadVal_Hi							
Access Rights	r/w	r/w	r/w	r/w	r/w	r/w	r/w	r/w

Table 104. Description of the higher TReloadReg bits

Bit	Symbol	Description
7 to 0	TReloadVal_Hi	Defines the higher 8 bits for the TReloadReg. With a start event the timer loads the TReloadVal. Changing this register affects the timer only at the next start event.

Table 105. TReloadReg (Lower bits) register (address 2Dh); reset value: 00h, 00000000b

	7	6	5	4	3	2	1	0
	TReloadVal_Lo							
Access Rights	r/w	r/w	r/w	r/w	r/w	r/w	r/w	r/w

Table 106. Description of lower TReloadReg bits

Bit	Symbol	Description
7 to 0	TReloadVal_Lo	Defines the lower 8 bits for the TReloadReg. With a start event the timer loads the TReloadVal. Changing this register affects the timer only at the next start event.

All information provided in this document is subject to legal disclaimers.

© NXP B.V. 2013. All rights reserved.

9.2.3.12 TCounterValReg

Contains the current value of the timer.

Note: The Counter value is split into two 8-bit register.

Table 107. TCounterValReg (Higher bits) register (address 2Eh); reset value: XXh, XXXXXXXXb

	7	6	5	4	3	2	1	0
	TCounterVal_Hi							
Access Rights	r	r	r	r	r	r	r	r

Table 108. Description of the higher TCounterValReg bits

Bit	Symbol	Description
7 to 0	TCounterVal_Hi	Current value of the timer, higher 8 bits.

Table 109. TCounterValReg (Lower bits) register (address 2Fh); reset value: XXh, XXXXXXXXb

	7	6	5	4	3	2	1	0
	TCounterVal_Lo							
Access Rights	r	r	r	r	r	r	r	r

Table 110. Description of lower TCounterValReg bits

Bit	Symbol	Description
7 to 0	TCounterVal_Lo	Current value of the timer, lower 8 bits.

9.2.4 Page 3: Test

9.2.4.1 PageReg

Selects the register page.

Table 111. PageReg register (address 30h); reset value: 00h, 00000000b

	7	6	5	4	3	2	1	0
	UsePageSelect	0	0	0	0	0	PageSelect	
Access Rights	r/w	RFU	RFU	RFU	RFU	RFU	r/w	r/w

All information provided in this document is subject to legal disclaimers.

© NXP B.V. 2013. All rights reserved.

Table 112. Description of PageReg bits

Bit	Symbol	Description
7	UsePageSelect	Set to logic 1, the value of PageSelect is used as register address A5 and A4. The LSB-bits of the register address are defined by the address pins or the internal address latch, respectively. Set to logic 0, the whole content of the internal address latch defines the register address. The address pins are used as described in Section 10.1 “Automatic microcontroller interface detection”.
6 to 2	-	Reserved for future use.
1 to 0	PageSelect	The value of PageSelect is used only if UsePageSelect is set to logic 1. In this case, it specifies the register page (which is A5 and A4 of the register address).

All information provided in this document is subject to legal disclaimers.

© NXP B.V. 2013. All rights reserved.

9.2.4.2 TestSel1Reg

General test signal configuration.

Table 113. TestSel1Reg register (address 31h); reset value: 00h, 00000000b

	7	6	5	4	3	2	1	0
	-	-	SAMClockSel		SAMClkD1	TstBusBitSel		
Access Rights	r/w	r/w	r/w	r/w	r/w	r/w	r/w	r/w

Table 114. Description of TestSel1Reg bits

Bit	Symbol	Description	
7 to 6	-	Reserved for future use.	
5 to 4	SAMClockSel	Defines the source for the 13.56 MHz SAM clock	
		Value	**Description**
		00	GND- Sam Clock switched off
		01	clock derived by the internal oscillator
		10	internal UART clock
		11	clock derived by the RF field
3	SAMClkD1	Set to logic 1, the SAM clock is delivered to D1. Note: Only possible if the 8bit parallel interface is not used.	
2 to 0	TstBusBitSel	Select the TestBus bit from the testbus to be propagated to SIGOUT.	

9.2.4.3 TestSel2Reg

General test signal configuration and PRBS control

Table 115. TestSel2Reg register (address 32h); reset value: 00h, 00000000b

	7	6	5	4	3	2	1	0
	TstBusFlip	PRBS9	PRBS15			TestBusSel		
Access Rights	r/w	r/w	r/w	r/w	r/w	r/w	r/w	r/w

Table 116. Description of TestSel2Reg bits

Bit	Symbol	Description
7	TstBusFlip	If set to logic 1, the testbus is mapped to the parallel port by the following order: D4, D3, D2, D6, D5, D0, D1. See Section 20 “Testsignals”.
6	PRBS9	Starts and enables the PRBS9 sequence according ITU-TO150. Note: All relevant registers to transmit data have to be configured before entering PRBS9 mode. Note: The data transmission of the defined sequence is started by the send command.
5	PRBS15	Starts and enables the PRBS15 sequence according ITU-TO150. Note: All relevant registers to transmit data have to be configured before entering PRBS15 mode. Note: The data transmission of the defined sequence is started by the send command.
4 to 0	TestBusSel	Selects the testbus. See Section 20 “Testsignals”

All information provided in this document is subject to legal disclaimers.

© NXP B.V. 2013. All rights reserved.

9.2.4.4 TestPinEnReg

Enables the pin output driver on the 8-bit parallel bus.

Table 117. TestPinEnReg register (address 33h); reset value: 80h, 10000000b

	7	6	5	4	3	2	1	0
	RS232LineEn				TestPinEn			
Access Rights	r/w	r/w	r/w	r/w	r/w	r/w	r/w	r/w

Table 118. Description of TestPinEnReg bits

Bit	Symbol	Description
7	RS232LineEn	Set to logic 0, the lines MX and DTRQ for the serial UART are disabled.
6 to 0	TestPinEn	Enables the pin output driver on the 8-bit parallel interface. **Example:** Setting bit 0 to 1 enables D0 Setting bit 5 to 1 enables D5 Note: Only valid if one of serial interfaces is used. If the SPI interface is used only D0 to D4 can be used. If the serial UART interface is used and RS232LineEn is set to logic 1 only D0 to D4 can be used.

9.2.4.5 TestPinValueReg

Defines the values for the 7-bit parallel port when it is used as I/O.

Table 119. TestPinValueReg register (address 34h); reset value: 00h, 00000000b

	7	6	5	4	3	2	1	0
	UseIO				TestPinValue			
Access Rights	r/w	r/w	r/w	r/w	r/w	r/w	r/w	r/w

Table 120. Description of TestPinValueReg bits

Bit	Symbol	Description
7	UseIO	Set to logic 1, this bit enables the I/O functionality for the 7-bit parallel port in case one of the serial interfaces is used. The input/output behavior is defined by TestPinEn in register TestPinEnReg. The value for the output behavior is defined in the bits TestPinVal. Note: If SAMClkD1 is set to logic 1, D1 can not be used as I/O.
6 to 0	TestPinValue	Defines the value of the 7-bit parallel port, when it is used as I/O. Each output has to be enabled by the TestPinEn bits in register TestPinEnReg. Note: Reading the register indicates the actual status of the pins D6 - D0 if UseIO is set to logic 1. If UseIO is set to logic 0, the value of the register TestPinValueReg is read back.

All information provided in this document is subject to legal disclaimers.

© NXP B.V. 2013. All rights reserved.

9.2.4.6 TestBusReg

Shows the status of the internal testbus.

Table 121. TestBusReg register (address 35h); reset value: XXh, XXXXXXXXb

	7	6	5	4	3	2	1	0
	TestBus							
Access Rights	r	r	r	r	r	r	r	r

Table 122. Description of TestBusReg bits

Bit	Symbol	Description
7 to 0	TestBus	Shows the status of the internal testbus. The testbus is selected by the register TestSel2Reg. See Section 20 “Testsignals”.

9.2.4.7 AutoTestReg

Controls the digital selftest.

Table 123. AutoTestReg register (address 36h); reset value: 40h, 01000000b

	7	6	5	4	3	2	1	0
	0	AmpRcv	EOFSOFAdjust	-	SelfTest			
Access Rights	RFT	r/w	RFU	RFU	r/w	r/w	r/w	r/w

Table 124. Description of bits

Bit	Symbol	Description
7	-	Reserved for production tests.
6	AmpRcv	If set to logic 1, the internal signal processing in the receiver chain is performed non-linear. This increases the operating distance in communication modes at 106 kbit. Note: Due to the non linearity the effect of the bits MinLevel and CollLevel in the register RxThreshholdReg are as well non linear.
5	EOFSOFAdjust	If set to logic 0 and the EOFSOFwidth is set to 1 will result in the Maximum length of SOF and EOF according to ISO/IEC14443B If set to logic 0 and the EOFSOFwidth is set to 0 will result in the Minimum length of SOF and EOF according to ISO/IEC14443B If this bit is set to 1 and the EOFSOFwidth bit is logic 1 will result in SOF low = (11 etu – 8 cycles)/fc SOF high = (2 etu + 8 cycles)/fc EOF low = (11 etu – 8 cycles)/fc For the behaviour in version 1.0, see Section 21 “Errata sheet” on page 109.
4	-	Reserved for future use.
3 to 0	SelfTest	Enables the digital self test. The selftest can be started by the selftest command in the command register. The selftest is enabled by 1001. Note: For default operation the selftest has to be disabled by 0000.

9.2.4.8 VersionReg

Shows the version.

All information provided in this document is subject to legal disclaimers.

© NXP B.V. 2013. All rights reserved.

Table 125. VersionReg register (address 37h); reset value: XXh, XXXXXXXXb

	7	6	5	4	3	2	1	0
	Version							
Access Rights	r	r	r	r	r	r	r	r

Table 126. Description of VersionReg bits

Bit	Symbol	Description
7 to 0	Version	80h indicates PN512 version 1.0, differences to version 2.0 are described within Section 21 “Errata sheet” on page 109. 82h indicates PN512 version 2.0, which covers also the industrial version.

All information provided in this document is subject to legal disclaimers.

© NXP B.V. 2013. All rights reserved.

9.2.4.9 AnalogTestReg

Controls the pins AUX1 and AUX2

Table 127. AnalogTestReg register (address 38h); reset value: 00h, 00000000b

	7	6	5	4	3	2	1	0
	AnalogSelAux1				AnalogSelAux2			
Access Rights	r/w	r/w	r/w	r/w	r/w	r/w	r/w	r/w

Table 128. Description of AnalogTestReg bits

Bit	Symbol	Description	
7 to 4	AnalogSelAux1	Controls the AUX pin.	
3 to 0	AnalogSelAux2	Note: All test signals are described in Section 20 “Testsignals”.	
		Value	**Description**
		0000	Tristate
		0001	Output of TestDAC1 (AUX1), output of TESTDAC2 (AUX2) Note: Current output. The use of 1 kΩ pull-down resistor on AUX is recommended.
		0010	Testsignal Corr1 Note: Current output. The use of 1 kΩ pull-down resistor on AUX is recommended.
		0011	Testsignal Corr2 Note: Current output. The use of 1 kΩ pull-down resistor on AUX is recommended.
		0100	Testsignal MinLevel Note: Current output. The use of 1 kΩ pull-down resistor on AUX is recommended.
		0101	Testsignal ADC channel I Note: Current output. The use of 1 kΩ pull-down resistor on AUX is recommended.
		0110	Testsignal ADC channel Q Note: Current output. The use of 1 kΩ pull-down resistor on AUX is recommended.
		0111	Testsignal ADC channel I combined with Q Note: Current output. The use of 1 kΩ pull-down resistor on AUX is recommended.
		1000	Testsignal for production test Note: Current output. The use of 1 kΩ pull-down resistor on AUX is recommended.
		1001	SAM clock (13.56 MHz)
		1010	HIGH
		1011	LOW
		1100	TxActive At 106 kbit: HIGH during Startbit, Data bit, Parity and CRC. At 212 and 424 kbit: High during Preamble, Sync, Data and CRC.
		1101	RxActive At 106 kbit: High during databit, Parity and CRC. At 212 and 424 kbit: High during data and CRC.
		1110	Subcarrier detected 106 kbit: not applicable 212 and 424 kbit: High during last part of Preamble, Sync data and CRC
		1111	TestBus-Bit as defined by the TstBusBitSel in register TestSel1Reg.

All information provided in this document is subject to legal disclaimers.

© NXP B.V. 2013. All rights reserved.

9.2.4.10 TestDAC1Reg

Defines the testvalues for TestDAC1.

Table 129. TestDAC1Reg register (address 39h); reset value: XXh, 00XXXXXXb

	7	6	5	4	3	2	1	0
	0	0	TestDAC1					
Access Rights	RFT	RFU	r/w	r/w	r/w	r/w	r/w	r/w

Table 130. Description of TestDAC1Reg bits

Bit	Symbol	Description
7	-	Reserved for production tests.
6	-	Reserved for future use.
5 to 0	TestDAC1	Defines the testvalue for TestDAC1. The output of the DAC1 can be switched to AUX1 by setting AnalogSelAux1 to 0001 in register AnalogTestReg.

9.2.4.11 TestDAC2Reg

Defines the testvalue for TestDAC2.

Table 131. TestDAC2Reg register (address 3Ah); reset value: XXh, 00XXXXXXb

	7	6	5	4	3	2	1	0
	0	0	TestDAC2					
Access Rights	RFU	RFU	r/w	r/w	r/w	r/w	r/w	r/w

Table 132. Description ofTestDAC2Reg bits

Bit	Symbol	Description
7 to 6	-	Reserved for future use.
5 to 0	TestDAC2	Defines the testvalue for TestDAC2. The output of the DAC2 can be switched to AUX2 by setting AnalogSelAux2 to 0001 in register AnalogTestReg.

9.2.4.12 TestADCReg

Shows the actual value of ADC I and Q channel.

Table 133. TestADCReg register (address 3Bh); reset value: XXh, XXXXXXXXb

	7	6	5	4	3	2	1	0
	ADC_I				ADC_Q			
Access Rights								

Table 134. Description of TestADCReg bits

Bit	Symbol	Description
7 to 4	ADC_I	Shows the actual value of ADC I channel.
3 to 0	ADC_Q	Shows the actual value of ADC Q channel.

All information provided in this document is subject to legal disclaimers.

© NXP B.V. 2013. All rights reserved.

9.2.4.13 RFTReg

Table 135. RFTReg register (address 3Ch); reset value: FFh, 11111111b

	7	6	5	4	3	2	1	0
	1	1	1	1	1	1	1	1
Access Rights	RFT	RFT	RFT	RFT	RFT	RFT	RFT	RFT

Table 136. Description of RFTReg bits

Bit	Symbol	Description
7 to 0	-	Reserved for production tests.

Table 137. RFTReg register (address 3Dh, 3Fh); reset value: 00h, 00000000b

	7	6	5	4	3	2	1	0
	0	0	0	0	0	0	0	0
Access Rights	RFT	RFT	RFT	RFT	RFT	RFT	RFT	RFT

Table 138. Description of RFTReg bits

Bit	Symbol	Description
7 to 0	-	Reserved for production tests.

Table 139. RFTReg register (address 3Eh); reset value: 03h, 00000011b

	7	6	5	4	3	2	1	0
	0	0	0	0	0	0	1	1
Access Rights	RFT	RFT	RFT	RFT	RFT	RFT	RFT	RFT

Table 140. Description of RFTReg bits

Bit	Symbol	Description
7 to 0	-	Reserved for production tests.

10. Digital interfaces

10.1 Automatic microcontroller interface detection

The PN512 supports direct interfacing of hosts using SPI, I^2C-bus or serial UART interfaces. The PN512 resets its interface and checks the current host interface type automatically after performing a power-on or hard reset. The PN512 identifies the host interface by sensing the logic levels on the control pins after the reset phase. This is done using a combination of fixed pin connections. Table 141 shows the different connection configurations.

All information provided in this document is subject to legal disclaimers.

© NXP B.V. 2013. All rights reserved.

Table 141. Connection protocol for detecting different interface types

Pin	Interface type		
	UART (input)	SPI (output)	I^2C-bus (I/O)
SDA	RX	NSS	SDA
I^2C	0	0	1
EA	0	1	EA
D7	TX	MISO	SCL
D6	MX	MOSI	ADR_0
D5	DTRQ	SCK	ADR_1
D4	-	-	ADR_2
D3	-	-	ADR_3
D2	-	-	ADR_4
D1	-	-	ADR_5

Table 142. Connection scheme for detecting the different interface types

PN512	Parallel Interface Type				Serial Interface Types		
	Separated Read/Write Strobe		Common Read/Write Strobe				
Pin	Dedicated Address Bus	Multiplexed Address Bus	Dedicated Address Bus	Multiplexed Address Bus	UART	SPI	I^2C
ALE	1	ALE	1	AS	RX	NSS	SDA
A5[1]	A5	0	A5	0	0	0	0
A4[1]	A4	0	A4	0	0	0	0
A3[1]	A3	0	A3	0	0	0	0
A2[1]	A2	1	A2	1	0	0	0
A1	A1	1	A1	1	0	0	1
A0	A0	1	A0	0	0	1	EA
NRD[1]	NRD	NRD	NDS	NDS	1	1	1
NWR[1]	NWR	NWR	RD/NWR	RD/NWR	1	1	1
NCS[1]	NCS	NCS	NCS	NCS	NCS	NCS	NCS
D7	D7	D7	D7	D7	TX	MISO	SCL
D6	D6	D6	D6	D6	MX	MOSI	ADR_0
D5	D5	AD5	D5	AD5	DTRQ	SCK	ADR_1
D4	D4	AD4	D4	AD4	-	-	ADR_2
D3	D3	AD3	D3	AD3	-	-	ADR_3
D2	D2	AD2	D2	AD2	-	-	ADR_4
D1	D1	AD1	D1	AD1	-	-	ADR_5
D0	D0	AD0	D0	AD0	-	-	ADR_6
Remark: Overview on the pin behavior							
Pin behavior	Input	Output	In/Out				

[1] only available in HVQFN 40.

All information provided in this document is subject to legal disclaimers.

© NXP B.V. 2013. All rights reserved.

10.2 Serial Peripheral Interface

A serial peripheral interface (SPI compatible) is supported to enable high-speed communication to the host. The interface can handle data speeds up to 10 Mbit/s. When communicating with a host, the PN512 acts as a slave, receiving data from the external host for register settings, sending and receiving data relevant for RF interface communication.

An interface compatible with SPI enables high-speed serial communication between the PN512 and a microcontroller. The implemented interface is in accordance with the SPI standard.

The timing specification is given in Section 26.1 on page 117.

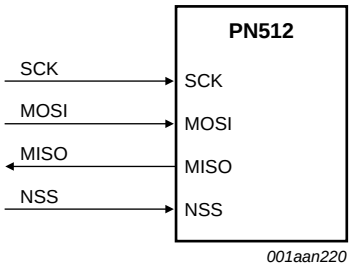

Fig 13. SPI connection to host

The PN512 acts as a slave during SPI communication. The SPI clock signal SCK must be generated by the master. Data communication from the master to the slave uses the MOSI line. The MISO line is used to send data from the PN512 to the master.

Data bytes on both MOSI and MISO lines are sent with the MSB first. Data on both MOSI and MISO lines must be stable on the rising edge of the clock and can be changed on the falling edge. Data is provided by the PN512 on the falling clock edge and is stable during the rising clock edge.

10.2.1 SPI read data

Reading data using SPI requires the byte order shown in Table 143 to be used. It is possible to read out up to n-data bytes.

The first byte sent defines both the mode and the address.

Table 143. MOSI and MISO byte order

Line	Byte 0	Byte 1	Byte 2	To	Byte n	Byte n + 1
MOSI	address 0	address 1	address 2	...	address n	00
MISO	X[1]	data 0	data 1	...	data n – 1	data n

[1] X = Do not care.

Remark: The MSB must be sent first.

10.2.2 SPI write data

To write data to the PN512 using SPI requires the byte order shown in Table 144. It is possible to write up to n data bytes by only sending one address byte.

All information provided in this document is subject to legal disclaimers.

© NXP B.V. 2013. All rights reserved.

The first send byte defines both the mode and the address byte.

Table 144. MOSI and MISO byte order

Line	Byte 0	Byte 1	Byte 2	To	Byte n	Byte n + 1
MOSI	address 0	data 0	data 1	...	data n – 1	data n
MISO	X[1]	X[1]	X[1]	...	X[1]	X[1]

[1] X = Do not care.

Remark: The MSB must be sent first.

10.2.3 SPI address byte

The address byte has to meet the following format.

The MSB of the first byte defines the mode used. To read data from the PN512 the MSB is set to logic 1. To write data to the PN512 the MSB must be set to logic 0. Bits 6 to 1 define the address and the LSB is set to logic 0.

Table 145. Address byte 0 register; address MOSI

7 (MSB)	6	5	4	3	2	1	0 (LSB)
1 = read 0 = write	address						0

10.3 UART interface

10.3.1 Connection to a host

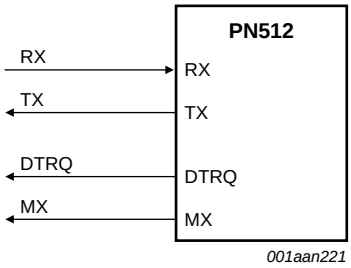

Fig 14. UART connection to microcontrollers

Remark: Signals DTRQ and MX can be disabled by clearing TestPinEnReg register's RS232LineEn bit.

10.3.2 Selectable UART transfer speeds

The internal UART interface is compatible with an RS232 serial interface.

The default transfer speed is 9.6 kBd. To change the transfer speed, the host controller must write a value for the new transfer speed to the SerialSpeedReg register. Bits BR_T0[2:0] and BR_T1[4:0] define the factors for setting the transfer speed in the SerialSpeedReg register.

The BR_T0[2:0] and BR_T1[4:0] settings are described in Table 10. Examples of different transfer speeds and the relevant register settings are given in Table 11.

All information provided in this document is subject to legal disclaimers.

© NXP B.V. 2013. All rights reserved.

Table 146. BR_T0 and BR_T1 settings

BR_Tn	Bit 0	Bit 1	Bit 2	Bit 3	Bit 4	Bit 5	Bit 6	Bit 7
BR_T0 factor	1	1	2	4	8	16	32	64
BR_T1 range	1 to 32	33 to 64	33 to 64	33 to 64	33 to 64	33 to 64	33 to 64	33 to 64

Table 147. Selectable UART transfer speeds

Transfer speed (kBd)	SerialSpeedReg value		Transfer speed accuracy (%)[1]
	Decimal	Hexadecimal	
7.2	250	FAh	–0.25
9.6	235	EBh	0.32
14.4	218	DAh	–0.25
19.2	203	CBh	0.32
38.4	171	ABh	0.32
57.6	154	9Ah	–0.25
115.2	122	7Ah	–0.25
128	116	74h	–0.06
230.4	90	5Ah	–0.25
460.8	58	3Ah	–0.25
921.6	28	1Ch	1.45
1228.8	21	15h	0.32

[1] The resulting transfer speed error is less than 1.5 % for all described transfer speeds.

The selectable transfer speeds shown in Table 11 are calculated according to the following equations:

If BR_T0[2:0] = 0:

$$transfer\ speed = \frac{27.12 \times 10^6}{(BR_T0 + 1)} \quad (1)$$

If BR_T0[2:0] > 0:

$$transfer\ speed = \left(\frac{\frac{27.12 \times 10^6}{(BR_T1 + 33)}}{2^{(BR_T0 - 1)}} \right) \quad (2)$$

Remark: Transfer speeds above 1228.8 kBd are not supported.

10.3.3 UART framing

Table 148. UART framing

Bit	Length	Value
Start	1-bit	0
Data	8 bits	data
Stop	1-bit	1

All information provided in this document is subject to legal disclaimers.

© NXP B.V. 2013. All rights reserved.

Remark: The LSB for data and address bytes must be sent first. No parity bit is used during transmission.

Read data: To read data using the UART interface, the flow shown in Table 149 must be used. The first byte sent defines both the mode and the address.

Table 149. Read data byte order

Pin	Byte 0	Byte 1
RX (pin 24)	address	-
TX (pin 31)	-	data 0

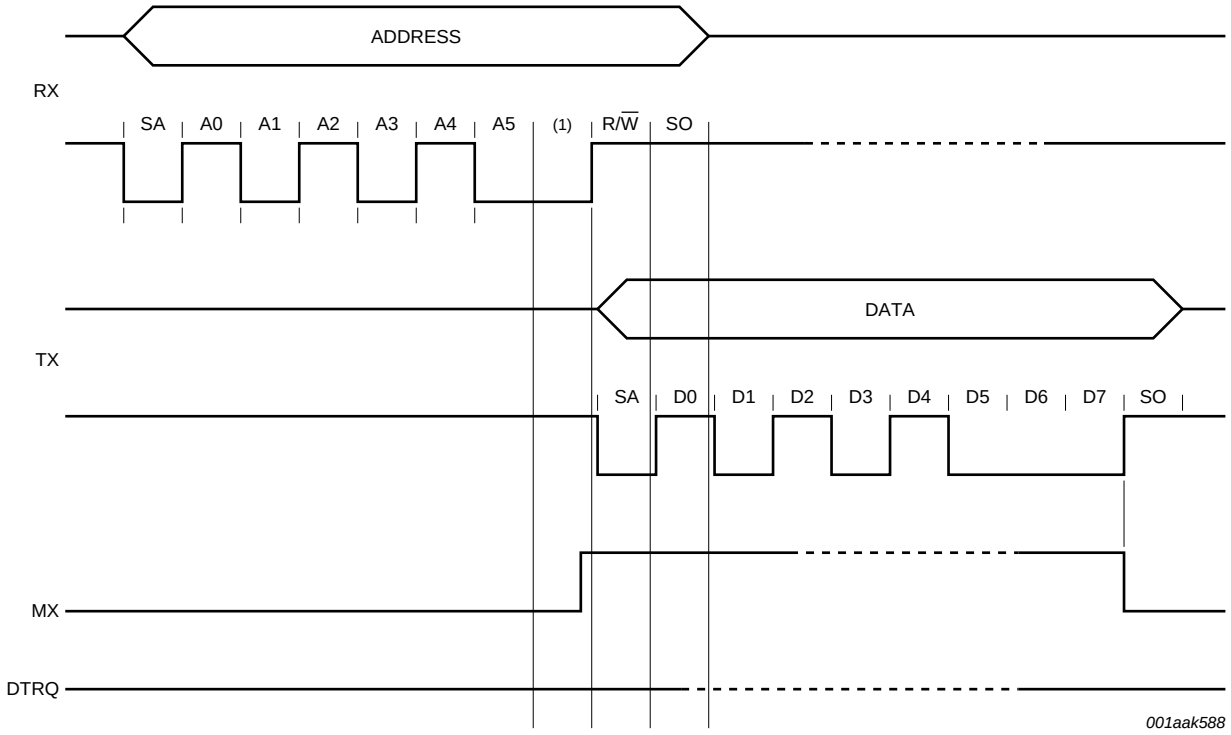

(1) Reserved.

Fig 15. UART read data timing diagram

Write data: To write data to the PN512 using the UART interface, the structure shown in Table 150 must be used.

The first byte sent defines both the mode and the address.

Table 150. Write data byte order

Pin	Byte 0	Byte 1
RX (pin 24)	address 0	data 0
TX (pin 31)	-	address 0

All information provided in this document is subject to legal disclaimers.

© NXP B.V. 2013. All rights reserved.

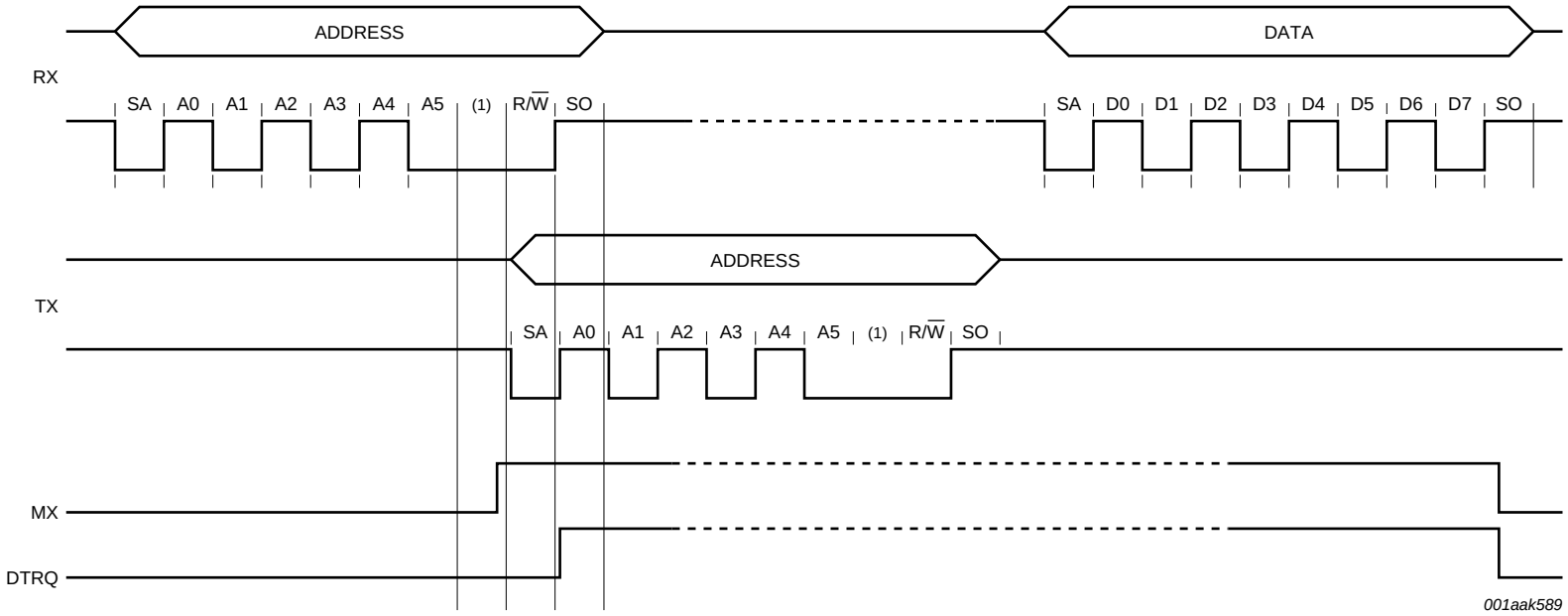

(1) Reserved.

Fig 16. UART write data timing diagram

Remark: The data byte can be sent directly after the address byte on pin RX.

Address byte: The address byte has to meet the following format:

All information provided in this document is subject to legal disclaimers.
© NXP B.V. 2013. All rights reserved.

The MSB of the first byte sets the mode used. To read data from the PN512, the MSB is set to logic 1. To write data to the PN512 the MSB is set to logic 0. Bit 6 is reserved for future use, and bits 5 to 0 define the address; see Table 151.

Table 151. Address byte 0 register; address MOSI

7 (MSB)	6	5	4	3	2	1	0 (LSB)
1 = read 0 = write	reserved	address					

10.4 I²C Bus Interface

An I²C-bus (Inter-IC) interface is supported to enable a low-cost, low pin count serial bus interface to the host. The I²C-bus interface is implemented according to NXP Semiconductors' *I²C-bus interface specification, rev. 2.1, January 2000*. The interface can only act in Slave mode. Therefore the PN512 does not implement clock generation or access arbitration.

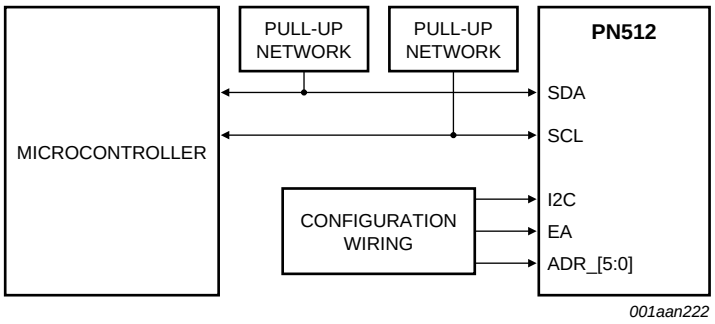

Fig 17. I²C-bus interface

The PN512 can act either as a slave receiver or slave transmitter in Standard mode, Fast mode and High-speed mode.

SDA is a bidirectional line connected to a positive supply voltage using a current source or a pull-up resistor. Both SDA and SCL lines are set HIGH when data is not transmitted. The PN512 has a 3-state output stage to perform the wired-AND function. Data on the I²C-bus can be transferred at data rates of up to 100 kBd in Standard mode, up to 400 kBd in Fast mode or up to 3.4 Mbit/s in High-speed mode.

If the I²C-bus interface is selected, spike suppression is activated on lines SCL and SDA as defined in the I²C-bus interface specification.

See Table 171 on page 117 for timing requirements.

All information provided in this document is subject to legal disclaimers.

© NXP B.V. 2013. All rights reserved.

10.4.1 Data validity

Data on the SDA line must be stable during the HIGH clock period. The HIGH or LOW state of the data line must only change when the clock signal on SCL is LOW.

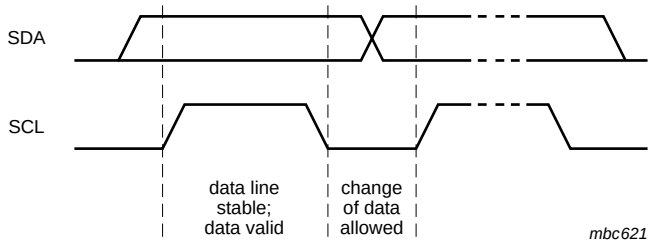

Fig 18. Bit transfer on the I²C-bus

10.4.2 START and STOP conditions

To manage the data transfer on the I²C-bus, unique START (S) and STOP (P) conditions are defined.

- A START condition is defined with a HIGH-to-LOW transition on the SDA line while SCL is HIGH.
- A STOP condition is defined with a LOW-to-HIGH transition on the SDA line while SCL is HIGH.

The I²C-bus master always generates the START and STOP conditions. The bus is busy after the START condition. The bus is free again a certain time after the STOP condition.

The bus stays busy if a repeated START (Sr) is generated instead of a STOP condition. The START (S) and repeated START (Sr) conditions are functionally identical. Therefore, S is used as a generic term to represent both the START (S) and repeated START (Sr) conditions.

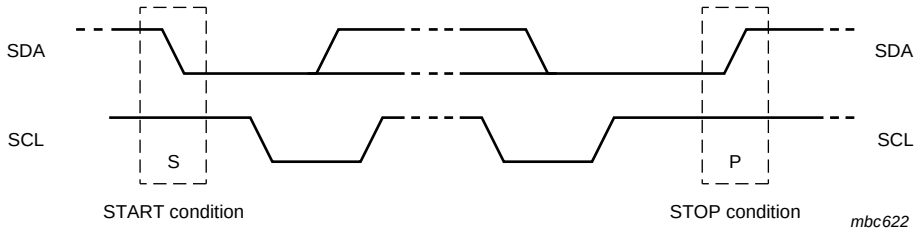

Fig 19. START and STOP conditions

10.4.3 Byte format

Each byte must be followed by an acknowledge bit. Data is transferred with the MSB first; see Figure 22. The number of transmitted bytes during one data transfer is unrestricted but must meet the read/write cycle format.

All information provided in this document is subject to legal disclaimers.

© NXP B.V. 2013. All rights reserved.

10.4.4 Acknowledge

An acknowledge must be sent at the end of one data byte. The acknowledge-related clock pulse is generated by the master. The transmitter of data, either master or slave, releases the SDA line (HIGH) during the acknowledge clock pulse. The receiver pulls down the SDA line during the acknowledge clock pulse so that it remains stable LOW during the HIGH period of this clock pulse.

The master can then generate either a STOP (P) condition to stop the transfer or a repeated START (Sr) condition to start a new transfer.

A master-receiver indicates the end of data to the slave-transmitter by not generating an acknowledge on the last byte that was clocked out by the slave. The slave-transmitter releases the data line to allow the master to generate a STOP (P) or repeated START (Sr) condition.

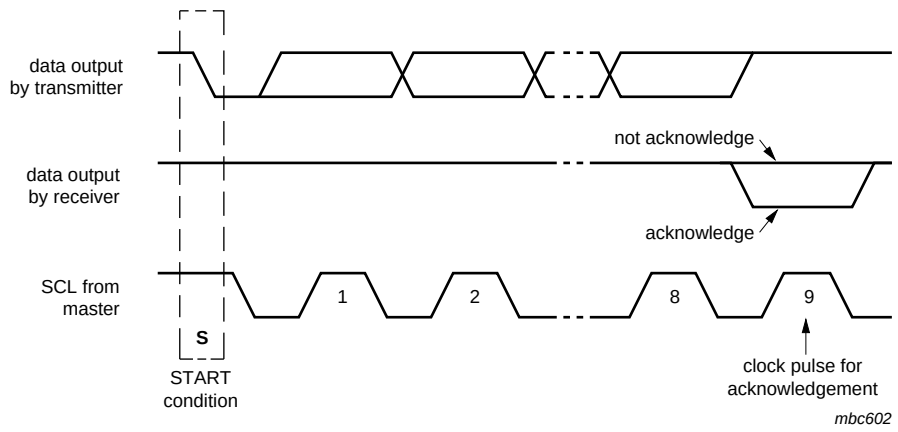

Fig 20. Acknowledge on the I²C-bus

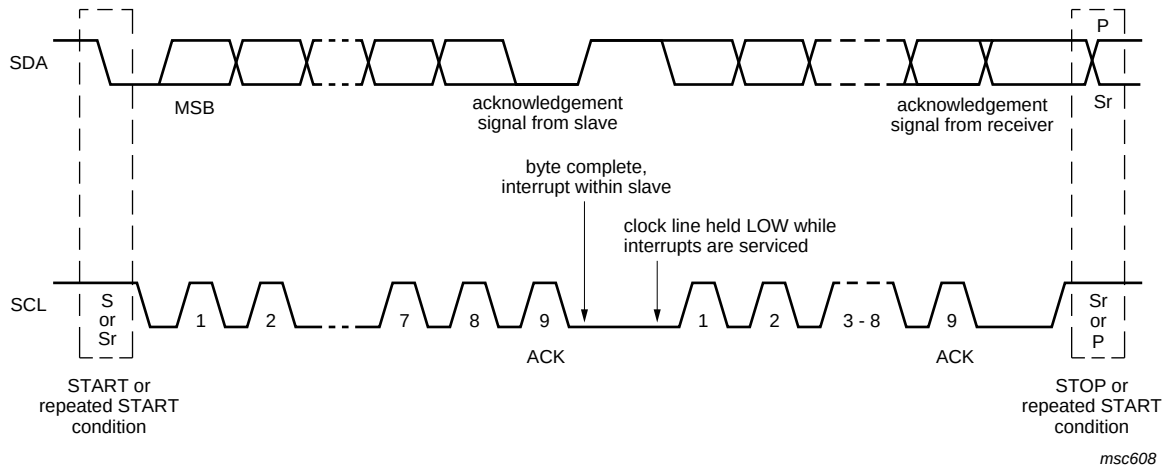

Fig 21. Data transfer on the I²C-bus

All information provided in this document is subject to legal disclaimers.

© NXP B.V. 2013. All rights reserved.

10.4.5 7-Bit addressing

During the I²C-bus address procedure, the first byte after the START condition is used to determine which slave will be selected by the master.

Several address numbers are reserved. During device configuration, the designer must ensure that collisions with these reserved addresses cannot occur. Check the *I²C-bus specification* for a complete list of reserved addresses.

The I²C-bus address specification is dependent on the definition of pin EA. Immediately after releasing pin NRSTPD or after a power-on reset, the device defines the I²C-bus address according to pin EA.

If pin EA is set LOW, the upper 4 bits of the device bus address are reserved by NXP Semiconductors and set to 0101b for all PN512 devices. The remaining 3 bits (ADR_0, ADR_1, ADR_2) of the slave address can be freely configured by the customer to prevent collisions with other I²C-bus devices.

If pin EA is set HIGH, ADR_0 to ADR_5 can be completely specified at the external pins according to Table 141 on page 69. ADR_6 is always set to logic 0.

In both modes, the external address coding is latched immediately after releasing the reset condition. Further changes at the used pins are not taken into consideration. Depending on the external wiring, the I²C-bus address pins can be used for test signal outputs.

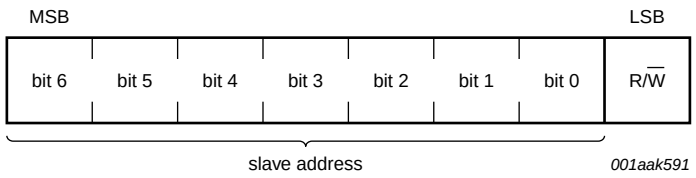

Fig 22. First byte following the START procedure

10.4.6 Register write access

To write data from the host controller using the I²C-bus to a specific register in the PN512 the following frame format must be used.

- The first byte of a frame indicates the device address according to the I²C-bus rules.
- The second byte indicates the register address followed by up to n-data bytes.

In one frame all data bytes are written to the same register address. This enables fast FIFO buffer access. The Read/Write (R/$\overline{W}$) bit is set to logic 0.

All information provided in this document is subject to legal disclaimers.

© NXP B.V. 2013. All rights reserved.

10.4.7 Register read access

To read out data from a specific register address in the PN512, the host controller must use the following procedure:

- Firstly, a write access to the specific register address must be performed as indicated in the frame that follows
- The first byte of a frame indicates the device address according to the I²C-bus rules
- The second byte indicates the register address. No data bytes are added
- The Read/Write bit is 0

After the write access, read access can start. The host sends the device address of the PN512. In response, the PN512 sends the content of the read access register. In one frame all data bytes can be read from the same register address. This enables fast FIFO buffer access or register polling.

The Read/Write (R/W) bit is set to logic 1.

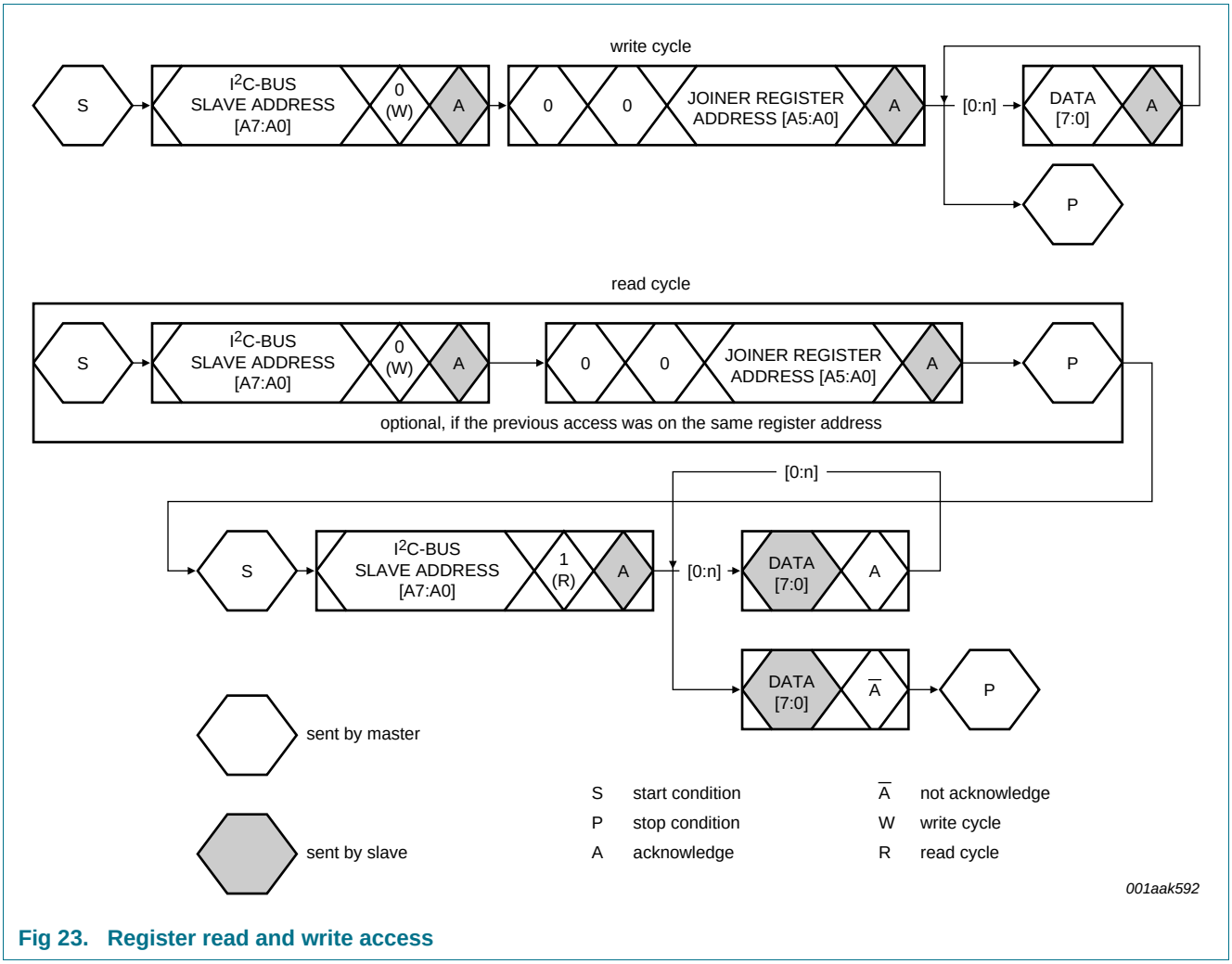

Fig 23. Register read and write access

All information provided in this document is subject to legal disclaimers.

© NXP B.V. 2013. All rights reserved.

10.4.8 High-speed mode

In High-speed mode (HS mode), the device can transfer information at data rates of up to 3.4 Mbit/s, while remaining fully downward-compatible with Fast or Standard mode (F/S mode) for bidirectional communication in a mixed-speed bus system.

10.4.9 High-speed transfer

To achieve data rates of up to 3.4 Mbit/s the following improvements have been made to I^2C-bus operation.

- The inputs of the device in HS mode incorporate spike suppression, a Schmitt trigger on the SDA and SCL inputs and different timing constants when compared to F/S mode
- The output buffers of the device in HS mode incorporate slope control of the falling edges of the SDA and SCL signals with different fall times compared to F/S mode

10.4.10 Serial data transfer format in HS mode

The HS mode serial data transfer format meets the Standard mode I^2C-bus specification. HS mode can only start after all of the following conditions (all of which are in F/S mode):

1. START condition (S)
2. 8-bit master code (00001XXXb)
3. Not-acknowledge bit ($\overline{A}$)

When HS mode starts, the active master sends a repeated START condition (Sr) followed by a 7-bit slave address with a R/W bit address and receives an acknowledge bit (A) from the selected PN512.

Data transfer continues in HS mode after the next repeated START (Sr), only switching back to F/S mode after a STOP condition (P). To reduce the overhead of the master code, a master links a number of HS mode transfers, separated by repeated START conditions (Sr).

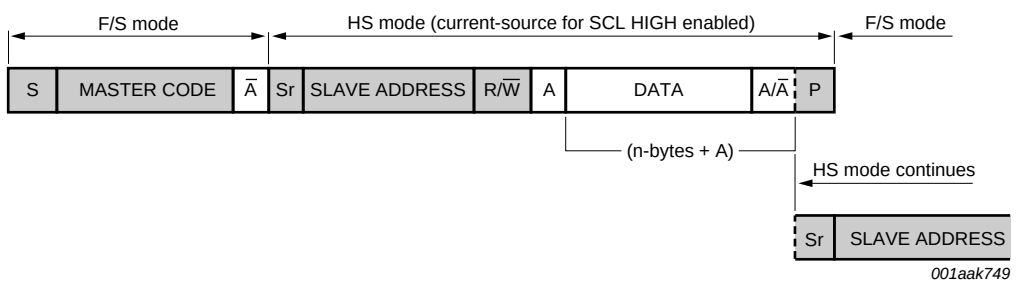

Fig 24. I^2C-bus HS mode protocol switch

All information provided in this document is subject to legal disclaimers.

© NXP B.V. 2013. All rights reserved.

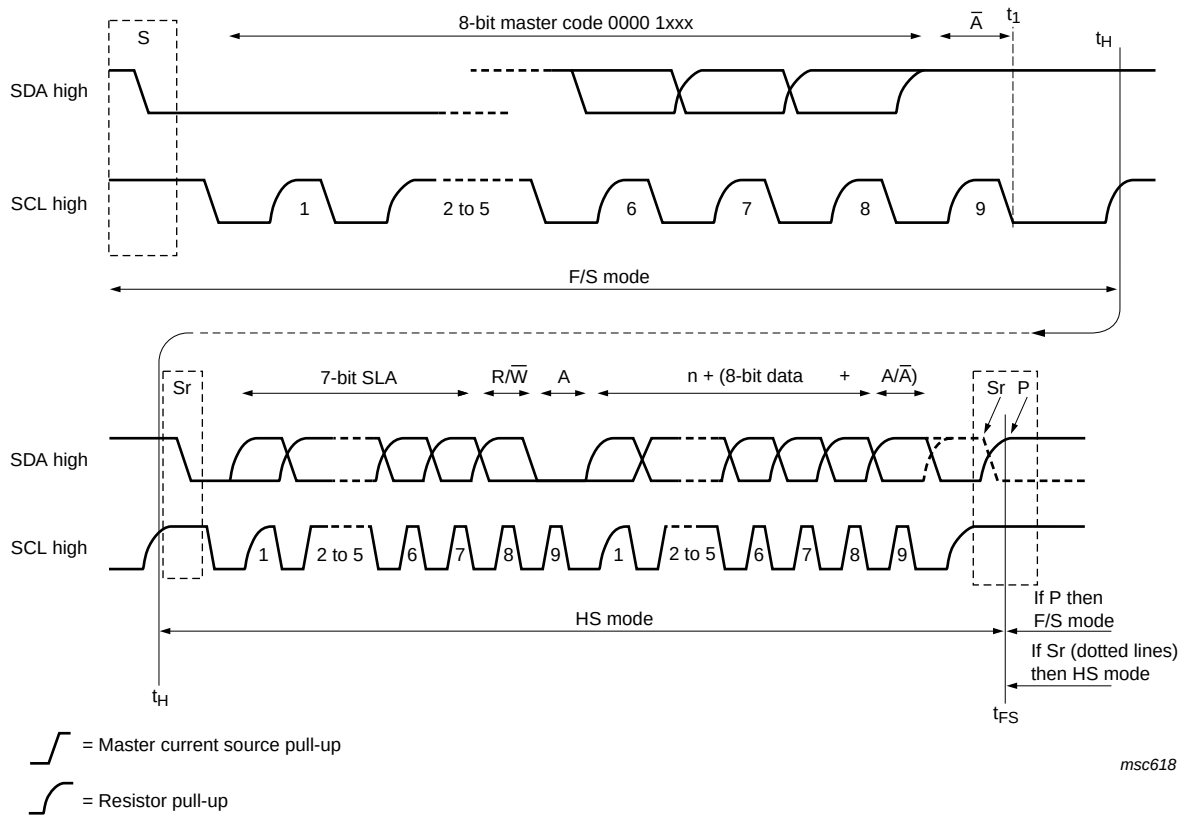

Fig 25. I²C-bus HS mode protocol frame

All information provided in this document is subject to legal disclaimers.

© NXP B.V. 2013. All rights reserved.

10.4.11 Switching between F/S mode and HS mode

After reset and initialization, the PN512 is in Fast mode (which is in effect F/S mode as Fast mode is downward-compatible with Standard mode). The connected PN512 recognizes the “S 00001XXX A” sequence and switches its internal circuitry from the Fast mode setting to the HS mode setting.

The following actions are taken:

1. Adapt the SDA and SCL input filters according to the spike suppression requirement in HS mode.
2. Adapt the slope control of the SDA output stages.

It is possible for system configurations that do not have other I^2C-bus devices involved in the communication to switch to HS mode permanently. This is implemented by setting Status2Reg register’s I^2CForceHS bit to logic 1. In permanent HS mode, the master code is not required to be sent. This is not defined in the specification and must only be used when no other devices are connected on the bus. In addition, spikes on the I^2C-bus lines must be avoided because of the reduced spike suppression.

10.4.12 PN512 at lower speed modes

PN512 is fully downward-compatible and can be connected to an F/S mode I^2C-bus system. The device stays in F/S mode and communicates at F/S mode speeds because a master code is not transmitted in this configuration.

11. 8-bit parallel interface

The PN512 supports two different types of 8-bit parallel interfaces, Intel and Motorola compatible modes.

11.1 Overview of supported host controller interfaces

The PN512 supports direct interfacing to various μ-Controllers. The following table shows the parallel interface types supported by the PN512.

Table 152. Supported interface types

Supported interface types	Bus	Separated Address and Data Bus	Multiplexed Address and Data Bus
Separated Read and Write Strobes (INTEL compatible)	control	NRD, NWR, NCS	NRD, NWR, NCS, ALE
	address	A0 … A3 [..A5*]	AD0 … AD7
	data	D0 … D7	AD0 … AD7
Multiplexed Read and Write Strobe (Motorola compatible)	control	R/NW, NDS, NCS	R/NW, NDS, NCS, AS
	address	A0 … A3 [..A5*]	AD0 … AD7
	data	D0 … D7	AD0 … AD7

All information provided in this document is subject to legal disclaimers.

© NXP B.V. 2013. All rights reserved.

11.2 Separated Read/Write strobe

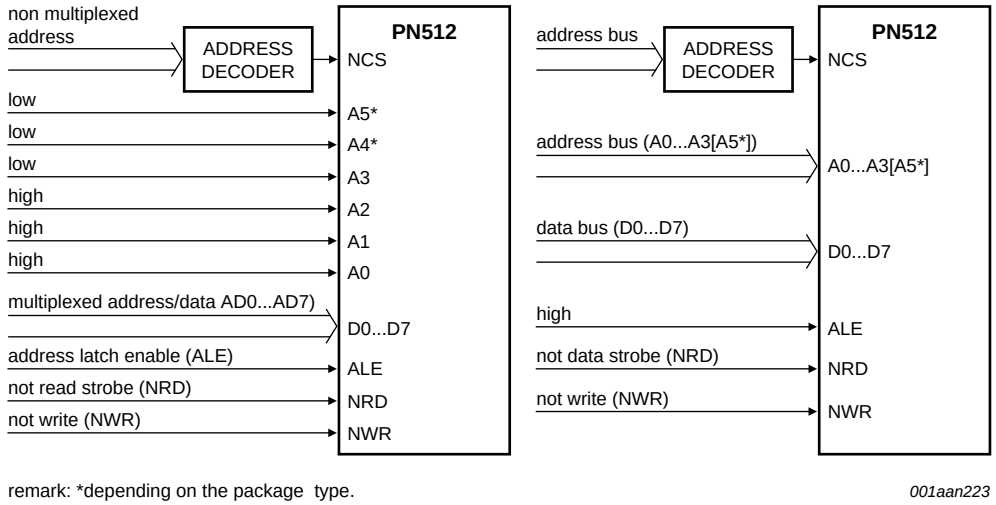

Fig 26. Connection to host controller with separated Read/Write strobes

For timing requirements refer to Section 26.2 “8-bit parallel interface timing”.

11.3 Common Read/Write strobe

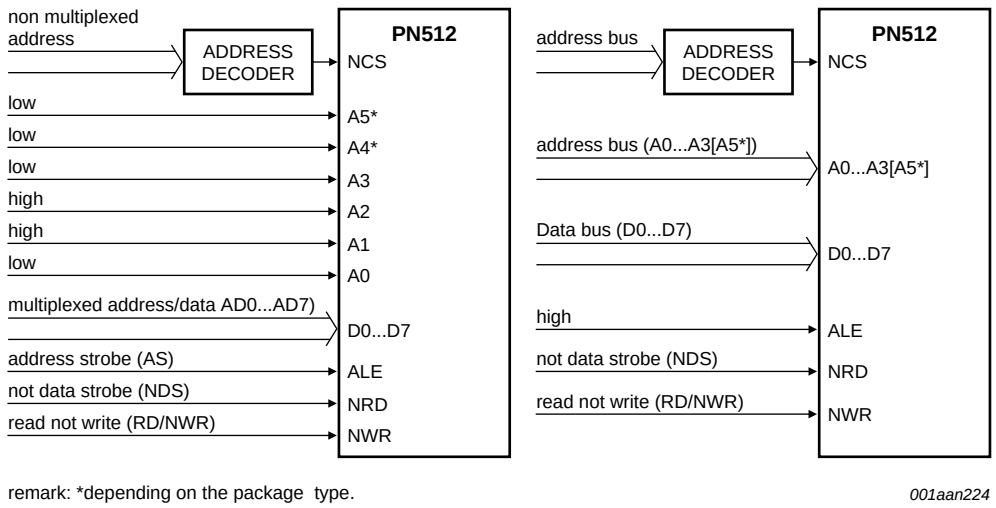

Fig 27. Connection to host controller with common Read/Write strobes

For timing requirements refer to Section 26.2 “8-bit parallel interface timing”

All information provided in this document is subject to legal disclaimers.

© NXP B.V. 2013. All rights reserved.

12. Analog interface and contactless UART

12.1 General

The integrated contactless UART supports the external host online with framing and error checking of the protocol requirements up to 848 kBd. An external circuit can be connected to the communication interface pins MFIN and MFOUT to modulate and demodulate the data.

The contactless UART handles the protocol requirements for the communication protocols in cooperation with the host. Protocol handling generates bit and byte-oriented framing. In addition, it handles error detection such as parity and CRC, based on the various supported contactless communication protocols.

Remark: The size and tuning of the antenna and the power supply voltage have an important impact on the achievable operating distance.

12.2 TX driver

The signal on pins TX1 and TX2 is the 13.56 MHz energy carrier modulated by an envelope signal. It can be used to drive an antenna directly using a few passive components for matching and filtering; see Section 15 on page 96. The signal on pins TX1 and TX2 can be configured using the TxControlReg register; see Section 9.2.2.5 on page 40.

The modulation index can be set by adjusting the impedance of the drivers. The impedance of the p-driver can be configured using registers CWGsPReg and ModGsPReg. The impedance of the n-driver can be configured using the GsNReg register. The modulation index also depends on the antenna design and tuning.

The TxModeReg and TxSelReg registers control the data rate and framing during transmission and the antenna driver setting to support the different requirements at the different modes and transfer speeds.

Table 153. Register and bit settings controlling the signal on pin TX1

Bit Tx1RFEn	Bit Force 100ASK	Bit InvTx1RFOn	Bit InvTx1RFOff	Envelope	Pin TX1	GSPMos	GSNMos	Remarks
0	X[1]	X[1]	X[1]	X[1]	X[1]	CWGsNOff	CWGsNOff	not specified if RF is switched off
1	0	0	X[1]	0	RF	pMod	nMod	100 % ASK: pin TX1 pulled to logic 0, independent of the InvTx1RFOff bit
				1	RF	pCW	nCW	
	0	1	X[1]	0	RF	pMod	nMod	
				1	RF	pCW	nCW	
	1	1	X[1]	0	0	pMod	nMod	
				1	RF_n	pCW	nCW	

[1] X = Do not care.

All information provided in this document is subject to legal disclaimers.

© NXP B.V. 2013. All rights reserved.

Table 154. Register and bit settings controlling the signal on pin TX2

Bit Tx1RFEn	Bit Force 100ASK	Bit Tx2CW	Bit InvTx2RFOn	Bit InvTx2RFOff	En-velope	Pin TX2	GSPMos	GSNMos	Remarks
0	X[1]	X[1]	X[1]	X[1]	X[1]	X[1]	CWGsNOff	CWGsNOff	not specified if RF is switched off
1	0	0	0	X[1]	0	RF	pMod	nMod	-
					1	RF	pCW	nCW	
			1	X[1]	0	RF_n	pMod	nMod	
					1	RF_n	pCW	nCW	
		1	0	X[1]	X[1]	RF	pCW	nCW	conductance always CW for the Tx2CW bit
			1	X[1]	X[1]	RF_n	pCW	nCW	
	1	0	0	X[1]	0	0	pMod	nMod	100 % ASK: pin TX2 pulled to logic 0 (independent of the InvTx2RFOn/InvTx2RFOff bits)
					1	RF	pCW	nCW	
			1	X[1]	0	0	pMod	nMod	
					1	RF_n	pCW	nCW	
		1	0	X[1]	X[1]	RF	pCW	nCW	
			1	X[1]	X[1]	RF_n	pCW	nCW	

[1] X = Do not care.

The following abbreviations have been used in Table 153 and Table 154:

- RF: 13.56 MHz clock derived from 27.12 MHz quartz crystal oscillator divided by 2
- RF_n: inverted 13.56 MHz clock
- GSPMos: conductance, configuration of the PMOS array
- GSNMos: conductance, configuration of the NMOS array
- pCW: PMOS conductance value for continuous wave defined by the CWGsPReg register
- pMod: PMOS conductance value for modulation defined by the ModGsPReg register
- nCW: NMOS conductance value for continuous wave defined by the GsNReg register's CWGsN[3:0] bits
- nMod: NMOS conductance value for modulation defined by the GsNReg register's ModGsN[3:0] bits
- X = do not care.

Remark: If only one driver is switched on, the values for CWGsPReg, ModGsPReg and GsNReg registers are used for both drivers.

12.3 RF level detector

The RF level detector is integrated to fulfill NFCIP1 protocol requirements (e.g. RF collision avoidance). Furthermore the RF level detector can be used to wake up the PN512 and to generate an interrupt.

All information provided in this document is subject to legal disclaimers.

© NXP B.V. 2013. All rights reserved.

The sensitivity of the RF level detector is adjustable in a 4-bit range using the bits RFLevel in register RFCfgReg. The sensitivity itself depends on the antenna configuration and tuning.

Possible sensitivity levels at the RX pin are listed in the Table 154.

Table 155. Setting of the bits RFlevel in register RFCfgReg (RFLevel amplifier deactivated)

V~Rx [Vpp]	RFLevel
~2	1111
~1.4	1110
~0.99	1101
~0.69	1100
~0.49	1011
~0.35	1010
~0.24	1001
~0.17	1000
~0.12	0111
~0.083	0110
~0.058	0101
~0.041	0100
~0.029	0011
~0.020	0010
~0.014	0001
~0.010	0000

To increase the sensitivity of the RF level detector an amplifier can be activated by setting the bit RFLevelAmp in register RFCfgReg to 1.

Remark: During soft Power-down mode the RF level detector amplifier is automatically switched off to ensure that the power consumption is less than 10 μA at 3 V.

Remark: With typical antennas lower sensitivity levels can provoke misleading results because of intrinsic noise in the environment.

Note: It is recommended to use the bit RFLevelAmp only with higher RF level settings.

12.4 Data mode detector

The Data mode detector gives the possibility to detect received signals according to the ISO/IEC 14443A/MIFARE, FeliCa or NFCIP-1 schemes at the standard transfer speeds for 106 kbit, 212 kbit and 424 kbit in order to prepare the internal receiver in a fast and convenient way for further data processing.

The Data mode detector can only be activated by the AutoColl command. The mode detector resets, when no external RF field is detected by the RF level detector. The Data mode detector could be switched off during the AutoColl command by setting bit ModeDetOff in register ModeReg to 1.

All information provided in this document is subject to legal disclaimers.

© NXP B.V. 2013. All rights reserved.

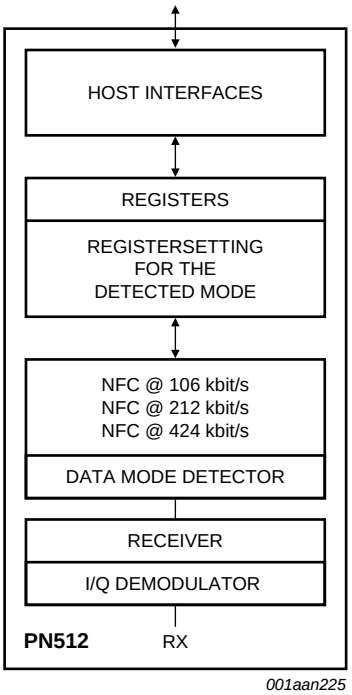

Fig 28. Data mode detector

All information provided in this document is subject to legal disclaimers.

© NXP B.V. 2013. All rights reserved.

12.5 Serial data switch

Two main blocks are implemented in the PN512. The digital block comprises the state machines, encoder/decoder logic. The analog block comprises the modulator and antenna drivers, the receiver and amplifiers. The interface between these two blocks can be configured in the way, that the interfacing signals may be routed to the pins SIGIN and SIGOUT. SIGIN is capable of processing digital NFC signals on transfer speeds above 424 kbit. The SIGOUT pin can provide a digital signal that can be used with an additional external circuit to generate transfer speeds above 424 kbit (including 106, 212 and 424 kbit). Furthermore SIGOUT and SIGIN can be used to enable the S^2C interface in the card SAM mode to emulate a card functionality with the PN512 and a secure IC. A secure IC can be the Smart*MX* smart card controller IC.

This topology allows the analog block of the PN512 to be connected to the digital block of another device.

The serial signal switch is controlled by the TxSelReg and RxSelReg registers.

Figure 29 shows the serial data switch for TX1 and TX2.

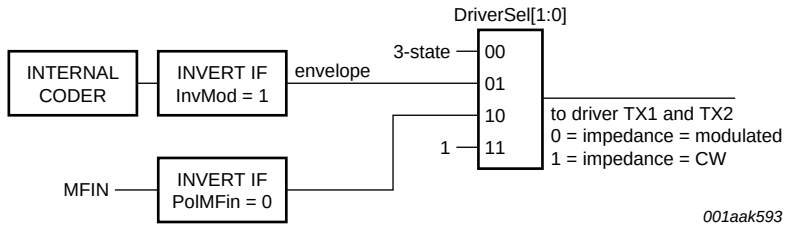

Fig 29. Serial data switch for TX1 and TX2

12.6 S^2C interface support

The S^2C provides the possibility to directly connect a secure IC to the PN512 in order act as a contactless smart card IC via the PN512. The interfacing signals can be routed to the pins SIGIN and SIGOUT. SIGIN can receive either a digital FeliCa or digitized ISO/IEC 14443A signal sent by the secure IC. The SIGOUT pin can provide a digital signal and a clock to communicate to the secure IC. A secure IC can be the smart card IC provided by NXP Semiconductors.

The PN512 has an extra supply pin (SVDD and PVSS as Ground line) for the SIGIN and SIGOUT pads.

Figure 31 outlines possible ways of communications via the PN512 to the secure IC.

All information provided in this document is subject to legal disclaimers.

© NXP B.V. 2013. All rights reserved.

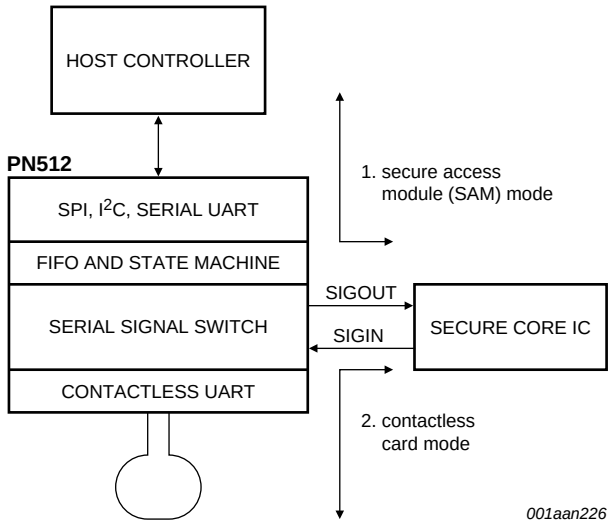

Fig 30. Communication flows using the S^{2}C interface

Configured in the Secure Access Mode the host controller can directly communicate to the Secure IC via SIGIN/SIGOUT. In this mode the PN512 generates the RF clock and performs the communication on the SIGOUT line. To enable the Secure Access module mode the clock has to be derived by the internal oscillator of the PN512, see bits SAMClockSel in register TestSel1Reg.

Configured in Contactless Card mode the secure IC can act as contactless smart card IC via the PN512. In this mode the signal on the SIGOUT line is provided by the external RF field of the external reader/writer. To enable the Contactless Card mode the clock derived by the external RF field has to be used.

The configuration of the S^{2}C interface differs for the FeliCa and MIFARE scheme as outlined in the following chapters.

All information provided in this document is subject to legal disclaimers.

© NXP B.V. 2013. All rights reserved.

12.6.1 Signal shape for Felica S²C interface support

The FeliCa secure IC is connected to the PN512 via the pins SIGOUT and SIGIN.

The signal at SIGOUT contains the information of the 13.56 MHz clock and the digitized demodulated signal. The clock and the demodulated signal is combined by using the logical function exclusive or.

To ensure that this signal is free of spikes, the demodulated signal is digitally filtered first. The time delay for that digital filtering is in the range of one bit length. The demodulated signal changes only at a positive edge of the clock.

The register TxSelReg controls the setting at SIGOUT.

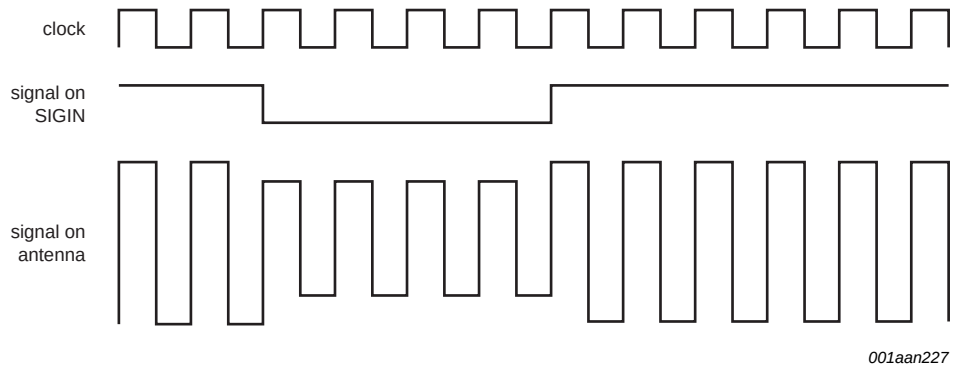

Fig 31. Signal shape for SIGOUT in FeliCa card SAM mode

The answer of the FeliCa SAM is transferred from SIGIN directly to the antenna driver. The modulation is done according to the register settings of the antenna drivers.

The clock is switched to AUX1 or AUX2 (see AnalogSelAux).

Note: A HIGH signal on AUX1 and AUX2 has the same level as AVDD. A HIGH signal at SIGOUT has the same level as SVDD. Alternatively it is possible to use pin D0 as clock output if a serial interface is used. The HIGH level at D0 is the same as PVDD.

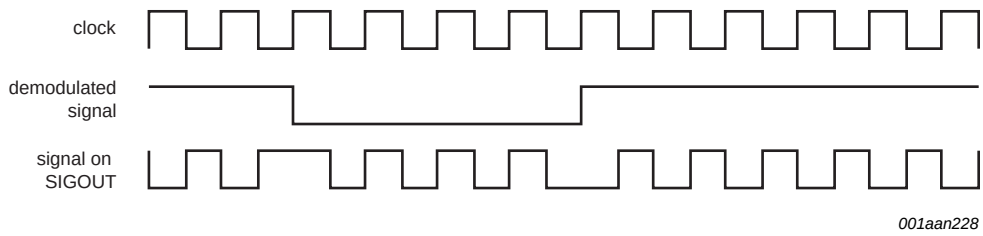

Fig 32. Signal shape for SIGIN in SAM mode

Note: The signal on the antenna is shown in principle only. In reality the waveform is sinusoidal.

All information provided in this document is subject to legal disclaimers.

© NXP B.V. 2013. All rights reserved.

12.6.2 Waveform shape for ISO/IEC 14443A and MIFARE S²C support

The secure IC, e.g. the Smart*MX* is connected to the PN512 via the pins SIGOUT and SIGIN.

The waveform shape at SIGOUT is a digital 13.56 MHz Miller coded signal with levels between PVSS and PVDD derived out of the external 13.56 MHz carrier signal in case of the Contactless Card mode or internally generated in terms of Secure Access mode.

The register TxSelReg controls the setting at SIGOUT.

Note: The clock settings for the Secure Access mode and the Contactless Card mode differ, refer to the description of the bits SAMClockSel in register TestSel1Reg.

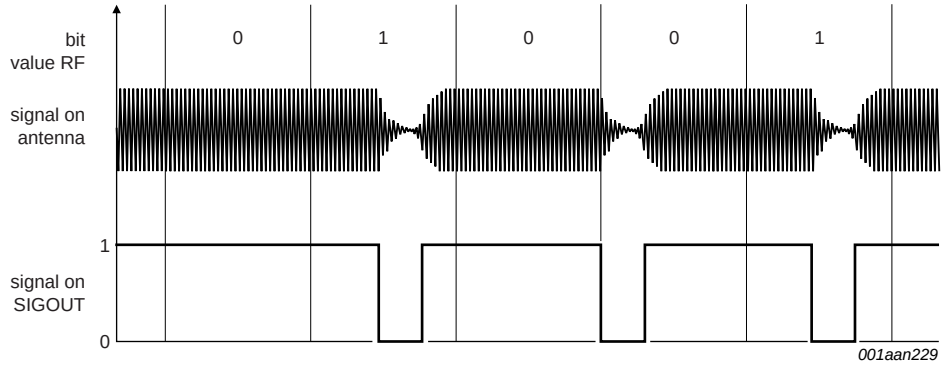

Fig 33. Signal shape for SIGOUT in MIFARE Card SAM mode

The signal at SIGIN is a digital Manchester coded signal according to the requirements of the ISO/IEC 14443A with the subcarrier frequency of 847.5 kHz generated by the secure IC.

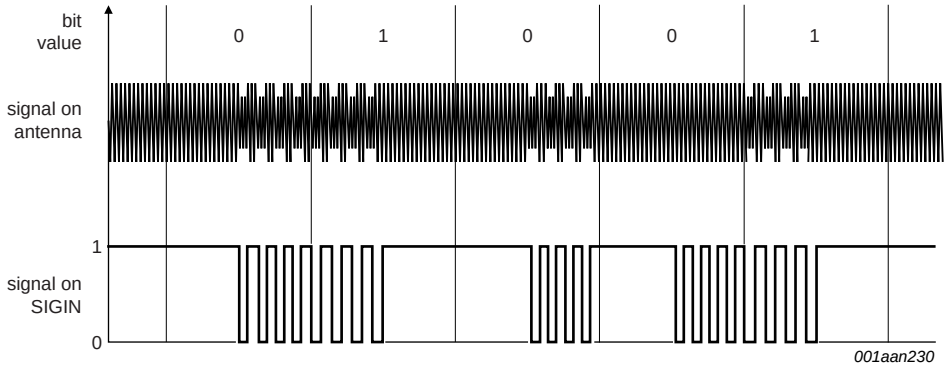

Fig 34. Signal shape for SIGIN in MIFARE Card SAM mode

All information provided in this document is subject to legal disclaimers.

© NXP B.V. 2013. All rights reserved.

12.7 Hardware support for FeliCa and NFC polling

12.7.1 Polling sequence functionality for initiator

1. Timer: The PN512 has a timer, which can be programmed in a way that it generates an interrupt at the end of each timeslot, or if required an interrupt is generated at the end of the last timeslot.
2. The receiver can be configured in a way to receive continuously. In this mode it can receive any number of packets. The receiver is ready to receive the next packet directly after the last packet has been received. This mode is active by setting the bit RxMultiple in register RxModeReg to 1 and has to be stopped by software.
3. The internal UART adds one byte to the end of every received packet, before it is transferred into the FIFO-buffer. This byte indicates if the received byte packet is correct (see register ErrReg). The first byte of each packet contains the length byte of the packet.
4. The length of one packet is 18 or 20 bytes (+ 1 byte Error-Info). The FIFO has a length of 64 bytes. This means three packets can be stored in the FIFO at the same time. If more than three packets are expected, the host controller has to empty the FIFO, before the FIFO is filled completely. In case of a FIFO-overflow data is lost (See bit BufferOvfl in register ErrorReg).

12.7.2 Polling sequence functionality for target

1. The host controller has to configure the PN512 with the correct polling response parameters for the polling command.
2. To activate the automatic polling in Target mode, the AutoColl Command has to be activated.
3. The PN512 receives the polling command send out by an initiator and answers with the polling response. The timeslot is selected automatically (The timeslot itself is randomly generated, but in the range 0 to TSN, which is defined by the Polling command). The PN512 compares the system code, stored in byte 17 and 18 of the Config Command with the system code received by the polling command of an initiator. If the system code is equal, the PN512 answers according to the configured polling response. The system code FF (hex) acts as a wildcard for the system code bytes, i.e. a target of a system code 1234 (hex) answers to the polling command with one of the following system codes 1234 (hex), 12FF (hex), FF34 (hex) or FFFF (hex). If the system code does not match no answer is sent back by the PN512.

   If a valid command is received by the PN512, which is not a Polling command, no answer is sent back and the command AutoColl is stopped. The received packet is stored in the FIFO.

All information provided in this document is subject to legal disclaimers.

© NXP B.V. 2013. All rights reserved.

12.7.3 Additional hardware support for FeliCa and NFC

Additionally to the polling sequence support for the Felica mode, the PN512 supports the check of the Len-byte.

The received Len-byte in accordance to the registers FelNFC1Reg and FelNFC2Reg:

DataLenMin in register FelNFC1Reg defines the minimum length of the accepted packet length. This register is six bit long. Each bit represents a length of four bytes.

DataLenMax in register FelNFC2Reg defines the maximum length of the accepted package. This register is six bit long. Each bit represents a length of four bytes. If set to logic 1 this limit is ignored. If the length is not in the supposed range, the packet is not transferred to the FIFO and receiving is kept active.

Example 1:

- DataLenMin = 4
  - The length shall be greater or equal 16.
- DataLenMax = 5
  - The length shall be smaller than 20. Valid area: 16, 17, 18, 19

Example 2:

- DataLenMin = 9
  - The length shall be greater or equal 36.
- DataLenMax = 0
  - The length shall be smaller than 256. Valid area: 36 to 255

12.7.4 CRC coprocessor

The following CRC coprocessor parameters can be configured:

- The CRC preset value can be either 0000h, 6363h, A671h or FFFFh depending on the ModeReg register's CRCPreset[1:0] bits setting
- The CRC polynomial for the 16-bit CRC is fixed to $x^{16} + x^{12} + x^5 + 1$
- The CRCResultReg register indicates the result of the CRC calculation. This register is split into two 8-bit registers representing the higher and lower bytes.
- The ModeReg register's MSBFirst bit indicates that data will be loaded with the MSB first.

Table 156. CRC coprocessor parameters

Parameter	Value
CRC register length	16-bit CRC
CRC algorithm	algorithm according to ISO/IEC 14443 A and ITU-T
CRC preset value	0000h, 6363h, A671h or FFFFh depending on the setting of the ModeReg register's CRCPreset[1:0] bits

All information provided in this document is subject to legal disclaimers.

© NXP B.V. 2013. All rights reserved.

13. FIFO buffer

An 8 × 64 bit FIFO buffer is used in the PN512. It buffers the input and output data stream between the host and the PN512's internal state machine. This makes it possible to manage data streams up to 64 bytes long without the need to take timing constraints into account.

13.1 Accessing the FIFO buffer

The FIFO buffer input and output data bus is connected to the FIFODataReg register. Writing to this register stores one byte in the FIFO buffer and increments the internal FIFO buffer write pointer. Reading from this register shows the FIFO buffer contents stored in the FIFO buffer read pointer and decrements the FIFO buffer read pointer. The distance between the write and read pointer can be obtained by reading the FIFOLevelReg register.

When the microcontroller starts a command, the PN512 can, while the command is in progress, access the FIFO buffer according to that command. Only one FIFO buffer has been implemented which can be used for input and output. The microcontroller must ensure that there are not any unintentional FIFO buffer accesses.

13.2 Controlling the FIFO buffer

The FIFO buffer pointers can be reset by setting FIFOLevelReg register's FlushBuffer bit to logic 1. Consequently, the FIFOLevel[6:0] bits are all set to logic 0 and the ErrorReg register's BufferOvfl bit is cleared. The bytes stored in the FIFO buffer are no longer accessible allowing the FIFO buffer to be filled with another 64 bytes.

13.3 FIFO buffer status information

The host can get the following FIFO buffer status information:

- Number of bytes stored in the FIFO buffer: FIFOLevelReg register's FIFOLevel[6:0]
- FIFO buffer almost full warning: Status1Reg register's HiAlert bit
- FIFO buffer almost empty warning: Status1Reg register's LoAlert bit
- FIFO buffer overflow warning: ErrorReg register's BufferOvfl bit. The BufferOvfl bit can only be cleared by setting the FIFOLevelReg register's FlushBuffer bit.

The PN512 can generate an interrupt signal when:

- ComIEnReg register's LoAlertIEn bit is set to logic 1. It activates pin IRQ when Status1Reg register's LoAlert bit changes to logic 1.
- ComIEnReg register's HiAlertIEn bit is set to logic 1. It activates pin IRQ when Status1Reg register's HiAlert bit changes to logic 1.

If the maximum number of WaterLevel bytes (as set in the WaterLevelReg register) or less are stored in the FIFO buffer, the HiAlert bit is set to logic 1. It is generated according to Equation 3:

$$HiAlert = (64 - FIFOLength) \leq WaterLevel \quad (3)$$

All information provided in this document is subject to legal disclaimers.

© NXP B.V. 2013. All rights reserved.

If the number of WaterLevel bytes (as set in the WaterLevelReg register) or less are stored in the FIFO buffer, the LoAlert bit is set to logic 1. It is generated according to Equation 4:

$$LoAlert = FIFOLength \leq WaterLevel \quad (4)$$

14. Interrupt request system

The PN512 indicates certain events by setting the Status1Reg register's IRq bit and, if activated, by pin IRQ. The signal on pin IRQ can be used to interrupt the host using its interrupt handling capabilities. This allows the implementation of efficient host software.

14.1 Interrupt sources overview

Table 157 shows the available interrupt bits, the corresponding source and the condition for its activation. The ComIrqReg register's TimerIRq interrupt bit indicates an interrupt set by the timer unit which is set when the timer decrements from 1 to 0.

The ComIrqReg register's TxIRq bit indicates that the transmitter has finished. If the state changes from sending data to transmitting the end of the frame pattern, the transmitter unit automatically sets the interrupt bit. The CRC coprocessor sets the DivIrqReg register's CRCIRq bit after processing all the FIFO buffer data which is indicated by CRCReady bit = 1.

The ComIrqReg register's RxIRq bit indicates an interrupt when the end of the received data is detected. The ComIrqReg register's IdleIRq bit is set if a command finishes and the Command[3:0] value in the CommandReg register changes to idle (see Table 158 on page 101).

The ComIrqReg register's HiAlertIRq bit is set to logic 1 when the Status1Reg register's HiAlert bit is set to logic 1 which means that the FIFO buffer has reached the level indicated by the WaterLevel[5:0] bits.

The ComIrqReg register's LoAlertIRq bit is set to logic 1 when the Status1Reg register's LoAlert bit is set to logic 1 which means that the FIFO buffer has reached the level indicated by the WaterLevel[5:0] bits.

The ComIrqReg register's ErrIRq bit indicates an error detected by the contactless UART during send or receive. This is indicated when any bit is set to logic 1 in register ErrorReg.

Table 157. Interrupt sources

Interrupt flag	Interrupt source	Trigger action
TimerIRq	timer unit	the timer counts from 1 to 0
TxIRq	transmitter	a transmitted data stream ends
CRCIRq	CRC coprocessor	all data from the FIFO buffer has been processed
RxIRq	receiver	a received data stream ends
IdleIRq	ComIrqReg register	command execution finishes
HiAlertIRq	FIFO buffer	the FIFO buffer is almost full
LoAlertIRq	FIFO buffer	the FIFO buffer is almost empty
ErrIRq	contactless UART	an error is detected

All information provided in this document is subject to legal disclaimers.

© NXP B.V. 2013. All rights reserved.

15. Timer unit

A timer unit is implemented in the PN512. The external host controller may use this timer to manage timing relevant tasks. The timer unit may be used in one of the following configurations:

- Time-out counter
- Watch-dog counter
- Stop watch
- Programmable one-shot
- Periodical trigger

The timer unit can be used to measure the time interval between two events or to indicate that a specific event occurred after a specific time. The timer can be triggered by events which will be explained in the following, but the timer itself does not influence any internal event (e.g. A time-out during data reception does not influence the reception process automatically). Furthermore, several timer related bits are set and these bits can be used to generate an interrupt.

Timer

The timer has an input clock of 13.56 MHz (derived from the 27.12 MHz quartz). The timer consists of two stages: 1 prescaler and 1 counter.

The prescaler is a 12-bit counter. The reload value for TPrescaler can be defined between 0 and 4095 in register TModeReg and TPrescalerReg.

The reload value for the counter is defined by 16 bits in a range of 0 to 65535 in the register TReloadReg.

The current value of the timer is indicated by the register TCounterValReg.

If the counter reaches 0 an interrupt will be generated automatically indicated by setting the TimerIRq bit in the register CommonIRqReg. If enabled, this event can be indicated on the IRQ line. The bit TimerIRq can be set and reset by the host controller. Depending on the configuration the timer will stop at 0 or restart with the value from register TReloadReg.

The status of the timer is indicated by bit TRunning in register Status1Reg.

The timer can be manually started by TStartNow in register ControlReg or manually stopped by TStopNow in register ControlReg.
Furthermore the timer can be activated automatically by setting the bit TAuto in the register TModeReg to fulfill dedicated protocol requirements automatically.

The time delay of a timer stage is the reload value +1.
The definition of total time is: t = ((TPrescaler*2+1)*TReload+1)/13.56MHz or if TPrescaleEven bit is set: t = ((TPrescaler*2+2)*TReload+1)/13.56MHz

Maximum time: TPrescaler = 4095,TReloadVal = 65535
=> (2*4095 +2)*65536/13.56 MHz = 39.59 s

Example:

All information provided in this document is subject to legal disclaimers.

© NXP B.V. 2013. All rights reserved.

To indicate 25 us it is required to count 339 clock cycles. This means the value for TPrescaler has to be set to TPrescaler = 169.The timer has now an input clock of 25 us. The timer can count up to 65535 timeslots of each 25 μs. For the behaviour in version 1.0, see Section 21 “Errata sheet” on page 109.

All information provided in this document is subject to legal disclaimers.

© NXP B.V. 2013. All rights reserved.

16. Power reduction modes

16.1 Hard power-down

Hard power-down is enabled when pin NRSTPD is LOW. This turns off all internal current sinks including the oscillator. All digital input buffers are separated from the input pins and clamped internally (except pin NRSTPD). The output pins are frozen at either a HIGH or LOW level.

16.2 Soft power-down mode

Soft Power-down mode is entered immediately after the CommandReg register's PowerDown bit is set to logic 1. All internal current sinks are switched off, including the oscillator buffer. However, the digital input buffers are not separated from the input pins and keep their functionality. The digital output pins do not change their state.

During soft power-down, all register values, the FIFO buffer content and the configuration keep their current contents.

After setting the PowerDown bit to logic 0, it takes 1024 clocks until the Soft power-down mode is exited indicated by the PowerDown bit. Setting it to logic 0 does not immediately clear it. It is cleared automatically by the PN512 when Soft power-down mode is exited.

Remark: If the internal oscillator is used, you must take into account that it is supplied by pin AVDD and it will take a certain time (t_{osc}) until the oscillator is stable and the clock cycles can be detected by the internal logic. It is recommended for the serial UART, to first send the value 55h to the PN512. The oscillator must be stable for further access to the registers. To ensure this, perform a read access to address 0 until the PN512 answers to the last read command with the register content of address 0. This indicates that the PN512 is ready.

16.3 Transmitter power-down mode

The Transmitter Power-down mode switches off the internal antenna drivers thereby, turning off the RF field. Transmitter power-down mode is entered by setting either the TxControlReg register's Tx1RFEn bit or Tx2RFEn bit to logic 0.

All information provided in this document is subject to legal disclaimers.

© NXP B.V. 2013. All rights reserved.

17. Oscillator circuitry

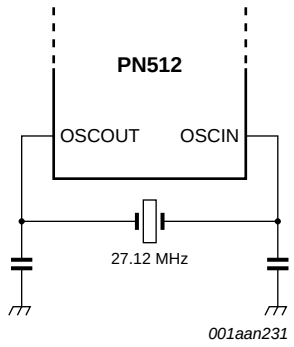

Fig 35. Quartz crystal connection

The clock applied to the PN512 provides a time basis for the synchronous system's encoder and decoder. The stability of the clock frequency, therefore, is an important factor for correct operation. To obtain optimum performance, clock jitter must be reduced as much as possible. This is best achieved using the internal oscillator buffer with the recommended circuitry.

If an external clock source is used, the clock signal must be applied to pin OSCIN. In this case, special care must be taken with the clock duty cycle and clock jitter and the clock quality must be verified.

18. Reset and oscillator start-up time

18.1 Reset timing requirements

The reset signal is filtered by a hysteresis circuit and a spike filter before it enters the digital circuit. The spike filter rejects signals shorter than 10 ns. In order to perform a reset, the signal must be LOW for at least 100 ns.

18.2 Oscillator start-up time

If the PN512 has been set to a Power-down mode or is powered by a V_{DDX} supply, the start-up time for the PN512 depends on the oscillator used and is shown in Figure 36.

The time ($t_{startup}$) is the start-up time of the crystal oscillator circuit. The crystal oscillator start-up time is defined by the crystal.

The time (t_d) is the internal delay time of the PN512 when the clock signal is stable before the PN512 can be addressed.

The delay time is calculated by:

$$t_d = \frac{1024}{27\ \mu s} = 37.74\ \mu s \quad (5)$$

The time (t_{osc}) is the sum of t_d and $t_{startup}$.

All information provided in this document is subject to legal disclaimers.

© NXP B.V. 2013. All rights reserved.

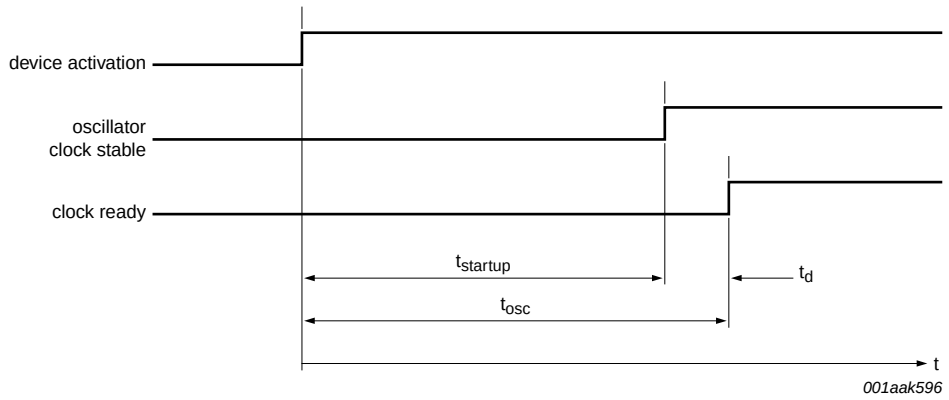

Fig 36. Oscillator start-up time

19. PN512 command set

The PN512 operation is determined by a state machine capable of performing a set of commands. A command is executed by writing a command code (see Table 158) to the CommandReg register.

Arguments and/or data necessary to process a command are exchanged via the FIFO buffer.

19.1 General description

The PN512 operation is determined by a state machine capable of performing a set of commands. A command is executed by writing a command code (see Table 158) to the CommandReg register.

Arguments and/or data necessary to process a command are exchanged via the FIFO buffer.

19.2 General behavior

- Each command that needs a data bit stream (or data byte stream) as an input immediately processes any data in the FIFO buffer. An exception to this rule is the Transceive command. Using this command, transmission is started with the BitFramingReg register's StartSend bit.
- Each command that needs a certain number of arguments, starts processing only when it has received the correct number of arguments from the FIFO buffer.
- The FIFO buffer is not automatically cleared when commands start. This makes it possible to write command arguments and/or the data bytes to the FIFO buffer and then start the command.
- Each command can be interrupted by the host writing a new command code to the CommandReg register, for example, the Idle command.

All information provided in this document is subject to legal disclaimers.

© NXP B.V. 2013. All rights reserved.

19.3 PN512 command overview

Table 158. Command overview

Command	Command code	Action
Idle	0000	no action, cancels current command execution
Configure	0001	Configures the PN512 for FeliCa, MIFARE and NFCIP-1 communication
Generate RandomID	0010	generates a 10-byte random ID number
CalcCRC	0011	activates the CRC coprocessor or performs a self test
Transmit	0100	transmits data from the FIFO buffer
NoCmdChange	0111	no command change, can be used to modify the CommandReg register bits without affecting the command, for example, the PowerDown bit
Receive	1000	activates the receiver circuits
Transceive	1100	transmits data from FIFO buffer to antenna and automatically activates the receiver after transmission
AutoColl	1101	Handles FeliCa polling (Card Operation mode only) and MIFARE anticollision (Card Operation mode only)
MFAuthent	1110	performs the MIFARE standard authentication as a reader
SoftReset	1111	resets the PN512

19.3.1 PN512 command descriptions

19.3.1.1 Idle

Places the PN512 in Idle mode. The Idle command also terminates itself.

19.3.1.2 Config command

To use the automatic MIFARE Anticollision, FeliCa Polling and NFCID3 the data used for these transactions has to be stored internally. All the following data have to be written to the FIFO in this order:

SENS_RES (2 bytes); in order byte 0, byte 1

NFCID1 (3 Bytes); in order byte 0, byte 1, byte 2; the first NFCID1 byte is fixed to 08h and the check byte is calculated automatically.

SEL_RES (1 Byte)

polling response (2 bytes (shall be 01h, FEh) + 6 bytes NFCID2 + 8 bytes Pad + 2 bytes system code)

NFCID3 (1 byte)

In total 25 bytes are transferred into an internal buffer.

The complete NFCID3 is 10 bytes long and consists of the 3 NFCID1 bytes, the 6 NFCID2 bytes and the one NFCID3 byte which are listed above.

To read out this configuration the command Config with an empty FIFO-buffer has to be started. In this case the 25 bytes are transferred from the internal buffer to the FIFO.

All information provided in this document is subject to legal disclaimers.

© NXP B.V. 2013. All rights reserved.

The PN512 has to be configured after each power up, before using the automatic Anticollision/Polling function (AutoColl command). During a hard power down (reset pin) this configuration remains unchanged.

This command terminates automatically when finished and the active command is idle.

19.3.1.3 Generate RandomID

This command generates a 10-byte random number which is initially stored in the internal buffer. This then overwrites the 10 bytes in the internal 25-byte buffer. This command automatically terminates when finished and the PN512 returns to Idle mode.

19.3.1.4 CalcCRC

The FIFO buffer content is transferred to the CRC coprocessor and the CRC calculation is started. The calculation result is stored in the CRCResultReg register. The CRC calculation is not limited to a dedicated number of bytes. The calculation is not stopped when the FIFO buffer is empty during the data stream. The next byte written to the FIFO buffer is added to the calculation.

The CRC preset value is controlled by the ModeReg register's CRCPreset[1:0] bits. The value is loaded in to the CRC coprocessor when the command starts.

This command must be terminated by writing a command to the CommandReg register, such as, the Idle command.

If the AutoTestReg register's SelfTest[3:0] bits are set correctly, the PN512 enters Self Test mode. Starting the CalcCRC command initiates a digital self test. The result of the self test is written to the FIFO buffer.

19.3.1.5 Transmit

The FIFO buffer content is immediately transmitted after starting this command. Before transmitting the FIFO buffer content, all relevant registers must be set for data transmission.

This command automatically terminates when the FIFO buffer is empty. It can be terminated by another command written to the CommandReg register.

19.3.1.6 NoCmdChange

This command does not influence any running command in the CommandReg register. It can be used to manipulate any bit except the CommandReg register Command[3:0] bits, for example, the RcvOff bit or the PowerDown bit.

19.3.1.7 Receive

The PN512 activates the receiver path and waits for a data stream to be received. The correct settings must be chosen before starting this command.

This command automatically terminates when the data stream ends. This is indicated either by the end of frame pattern or by the length byte depending on the selected frame type and speed.

Remark: If the RxModeReg register's RxMultiple bit is set to logic 1, the Receive command will not automatically terminate. It must be terminated by starting another command in the CommandReg register.

All information provided in this document is subject to legal disclaimers.

© NXP B.V. 2013. All rights reserved.

19.3.1.8 Transceive

This command continuously repeats the transmission of data from the FIFO buffer and the reception of data from the RF field. The first action is transmit and after transmission the command is changed to receive a data stream.

Each transmit process must be started by setting the BitFramingReg register's StartSend bit to logic 1. This command must be cleared by writing any command to the CommandReg register.

Remark: If the RxModeReg register's RxMultiple bit is set to logic 1, the Transceive command never leaves the receive state because this state cannot be cancelled automatically.

19.3.1.9 AutoColl

This command automatically handles the MIFARE activation and the FeliCa polling in the Card Operation mode. The bit Initiator in the register ControlReg has to be set to logic 0 for correct operation. During this command also the mode detector is active if not deactivated by setting the bit ModeDetOff in the ModeReg register. After the mode detector detects a mode, all the mode dependent registers are set according to the received data. In case of no external RF field the command resets the internal state machine and returns to the initial state but it will not be terminated. When the command terminates the transceive command gets active.

During protocol processing the IRQ bits are not supported. Only the last received frame will serve the IRQ's. The treatment of the TxCRCEn and RxCRCEn bits is different to the protocol. During ISO/IEC 14443A activation the enable bits are defined by the command AutoColl. The changes cannot be observed at the register TXModeReg and RXModeReg. After the Transceive command is active, the value of the register bit is relevant.

The FIFO will also receive the two CRC check bytes of the last command even if they already checked and correct, if the state machine (Anticollision and Select routine) has to not been executed and 106 kbit is detected.

During Felica activation the register bit is always relevant and is not overruled by the command settings. This command can be cleared by software by writing any other command to the CommandReg register, e.g. the idle command. Writing the same content again to the CommandReg register resets the state machine.

All information provided in this document is subject to legal disclaimers.

© NXP B.V. 2013. All rights reserved.

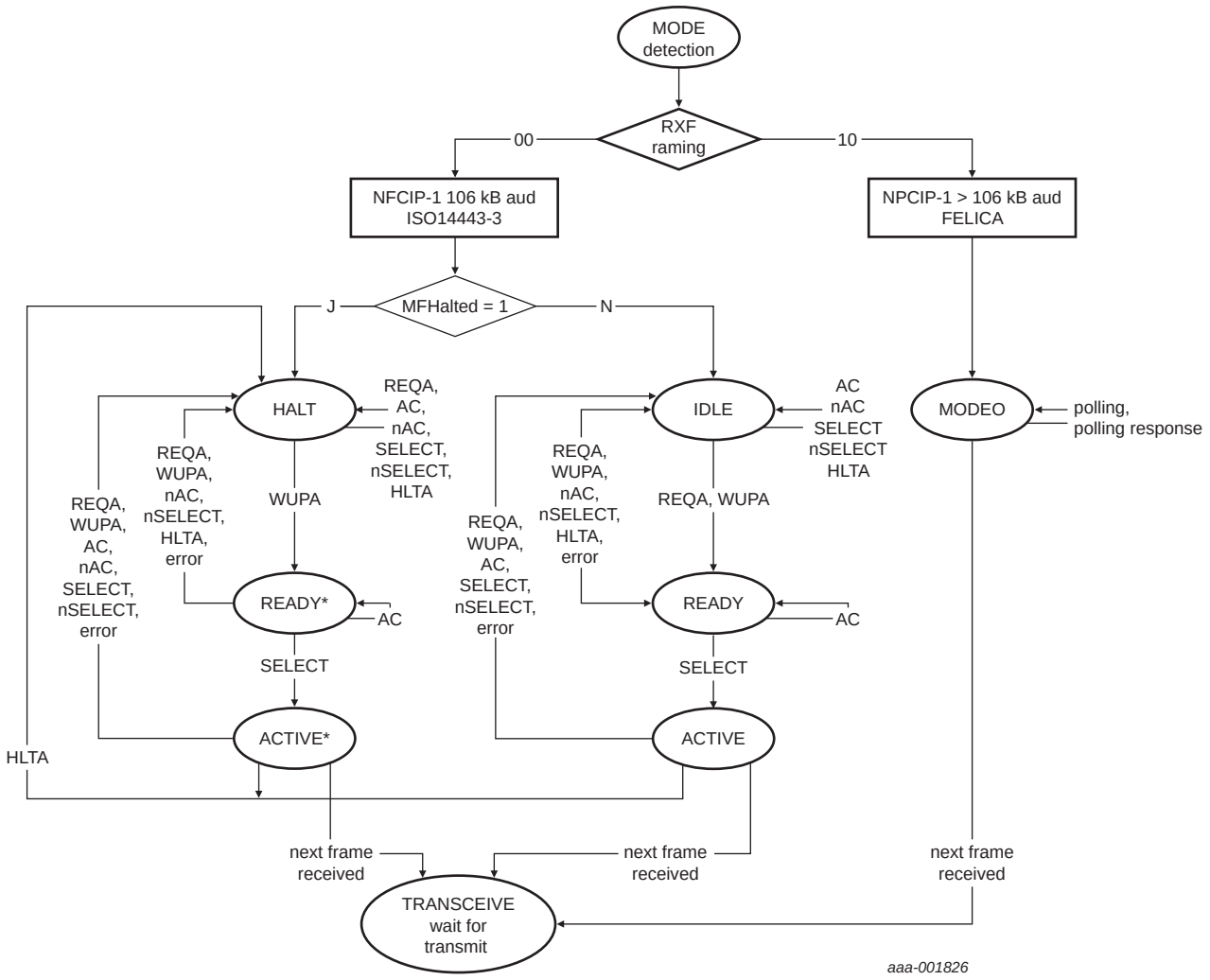

Fig 37. Autocoll Command

NFCIP-1 106 kbps Passive Communication mode:

The MIFARE anticollision is finished and the command has automatically changed to Transceive. The FIFO contains the ATR_REQ frame including the start byte F0h. The bit TargetActivated in the Status2Reg register is set to logic 1.

NFCIP-1 212/424 kbps Passive Communication mode:

The FeliCa polling command is finished and the command has automatically changed to Transceive. The FIFO contains the ATR_REQ. The bit TargetActivated in the Status2Reg register is set to logic 1.

NFCIP-1 106/212/424 kbps Active Communication mode:

This command is changing the automatically to the command Transceive. The FIFO contains the ATR REQ The bit TargetActivated in the Status2Reg register is set to logic 0. For 106 kbps only, the first byte in the FIFO indicates the start byte F0h and the CRC is added to the FIFO.

All information provided in this document is subject to legal disclaimers.

© NXP B.V. 2013. All rights reserved.

MIFARE (Card Operation mode):

The MIFARE anticollision is finished and the command has automatically changed to transceive. The FIFO contains the first command after the Select. The bit TargetActivated in the Status2Reg register is set to logic 1.

Felica (Card Operation mode):

The FeliCa polling command is finished and the command has automatically changed to transceive. The FIFO contains the first command followed after the Poling by the FeliCa protocol. The bit TargetActivated in the Status2Reg register is set to logic 1.

19.3.1.10 MFAuthent

This command manages MIFARE authentication to enable a secure communication to any MIFARE Mini, MIFARE 1K and MIFARE 4K card. The following data is written to the FIFO buffer before the command can be activated:

- Authentication command code (60h, 61h)
- Block address
- Sector key byte 0
- Sector key byte 1
- Sector key byte 2
- Sector key byte 3
- Sector key byte 4
- Sector key byte 5
- Card serial number byte 0
- Card serial number byte 1
- Card serial number byte 2
- Card serial number byte 3

In total 12 bytes are written to the FIFO.

Remark: When the MFAuthent command is active all access to the FIFO buffer is blocked. However, if there is access to the FIFO buffer, the ErrorReg register's WrErr bit is set.

This command automatically terminates when the MIFARE card is authenticated and the Status2Reg register's MFCrypto1On bit is set to logic 1.

This command does not terminate automatically if the card does not answer, so the timer must be initialized to automatic mode. In this case, in addition to the IdleIRq bit, the TimerIRq bit can be used as the termination criteria. During authentication processing, the RxIRq bit and TxIRq bit are blocked. The Crypto1On bit is only valid after termination of the MFAuthent command, either after processing the protocol or writing Idle to the CommandReg register.

If an error occurs during authentication, the ErrorReg register's ProtocolErr bit is set to logic 1 and the Status2Reg register's Crypto1On bit is set to logic 0.

All information provided in this document is subject to legal disclaimers.

© NXP B.V. 2013. All rights reserved.

19.3.1.11 SoftReset

This command performs a reset of the device. The configuration data of the internal buffer remains unchanged. All registers are set to the reset values. This command automatically terminates when finished.

Remark: The SerialSpeedReg register is reset and therefore the serial data rate is set to 9.6 kBd.

All information provided in this document is subject to legal disclaimers.

© NXP B.V. 2013. All rights reserved.

20. Testsignals

20.1 Selftest

The PN512 has the capability to perform a digital selftest. To start the selftest the following procedure has to be performed:

1. Perform a soft reset.
2. Clear the internal buffer by writing 25 bytes of 00h and perform the Config Command.
3. Enable the Selftest by writing the value 09h to the register AutoTestReg.
4. Write 00h to the FIFO.
5. Start the Selftest with the CalcCRC Command.
6. The Selftest will be performed.
7. When the Selftest is finished, the FIFO contains the following bytes:

   Version 1.0 has a different Selftest answer, explained in Section 21.

   Correct answer for VersionReg equal to 82h:

```
00h, EBh, 66h, BAh, 57h, BFh, 23h, 95h, D0h, E3h, 0Dh, 3Dh, 27h, 89h, 5Ch, DEh,
     9Dh, 3Bh, A7h, 00h, 21h, 5Bh, 89h, 82h, 51h, 3Ah, EBh, 02h, 0Ch, A5h, 00h,
     49h, 7Ch, 84h, 4Dh, B3h, CCh, D2h, 1Bh, 81h, 5Dh, 48h, 76h, D5h, 71h, 61h,
     21h, A9h, 86h, 96h, 83h, 38h, CFh, 9Dh, 5Bh, 6Dh, DCh, 15h, BAh, 3Eh, 7Dh,
     95h, 3Bh, 2Fh
```

20.2 Testbus

The testbus is implemented for production test purposes. The following configuration can be used to improve the design of a system using the PN512. The testbus allows to route internal signals to the digital interface. The testbus signals are selected by accessing TestBusSel in register TestSel2Reg.

Table 159. Testsignal routing (TestSel2Reg = 07h)

Pins	D6	D5	D4	D3	D2	D1	D0
Testsignal	sdata	scoll	svalid	sover	RCV_reset	RFon, filtered	Envelope

Table 160. Description of Testsignals

Pins	Testsignal	Description
D6	sdata	shows the actual received data stream.
D5	scoll	shows if in the actual bit a collision has been detected (106 kbit only)
D4	svalid	shows if sdata and scoll are valid
D3	sover	shows that the receiver has detected a stop condition (ISO/IEC 14443A/ MIFARE mode only).
D2	RCV_reset	shows if the receiver is reset
D1	RFon, filtered	shows the value of the internal RF level detector
D0	Envelope	shows the output of the internal coder

All information provided in this document is subject to legal disclaimers.

© NXP B.V. 2013. All rights reserved.

Table 161. Testsignal routing (TestSel2Reg = 0Dh)

Pins	D6	D5	D4	D3	D2	D1	D0
Testsignal	clkstable	clk27/8	clk27rf/8	clkrf13rf/4	clk27	clk27rf	clk13rf

Table 162. Description of Testsignals

Pins	Testsignal	Description
D6	clkstable	shows if the oscillator delivers a stable signal.
D5	clk27/8	shows the output signal of the oscillator divided by 8
D4	clk27rf/8	shows the clk27rf signal divided by 8
D3	clkrf13/4	shows the clk13rf divided by 4.
D2	clk27	shows the output signal of the oscillator
D1	clk27rf	shows the RF clock multiplied by 2.
D0	clk13rf	shows the RF clock of 13.56 MHz

Table 163. Testsignal routing (TestSel2Reg = 19h)

Pins	D6	D5	D4	D3	D2	D1	D0
Testsignal	-	TRunning	-	-	-	-	-

Table 164. Description of Testsignals

Pins	Testsignal	Description
D6	-	-
D5	TRunning	TRunning stops 1 clockcycle after TimerIRQ is raised
D4	-	-
D3	-	-
D2	-	-
D1	-	-
D0	-	-

20.3 Testsignals at pin AUX

Table 165. Testsignals description

SelAux	Description for Aux1 / Aux2
0000	Tristate
0001	DAC: register TestDAC 1/2
0010	DAC: testsignal corr1
0011	DAC: testsignal corr2
0100	DAC: testsignal MinLevel
0101	DAC: ADC_I
0110	DAC: ADC_Q
0111	DAC: testsignal ADC_I combined with ADC_Q
1000	Testsignal for production test
1001	SAM clock
1010	High
1011	low
1100	TxActive

All information provided in this document is subject to legal disclaimers.

© NXP B.V. 2013. All rights reserved.

Table 165. Testsignals description

SelAux	Description for Aux1 / Aux2
1101	RxActive
1110	Subcarrier detected
1111	TstBusBit

Each signal can be switched to pin AUX1 or AUX2 by setting SelAux1 or SelAux2 in the register AnalogTestReg.

Note: The DAC has a current output, it is recommended to use a 1 kΩ pull-down resistance at pins AUX1/AUX2.

20.4 PRBS

Enables the PRBS9 or PRBS15 sequence according to ITU-TO150. To start the transmission of the defined datastream the command send has to be activated. The preamble/Sync byte/start bit/parity bit are generated automatically depending on the selected mode.

Note: All relevant register to transmit data have to be configured before entering PRBS mode according ITU-TO150.

21. Errata sheet

This data sheet is describing the functionality for version 2.0 and the industrial version.

This chapter lists all differences from version 1.0 to version 2.0:

The value of the version in Section 9.2.4.8 is set to80h.

The behaviour ‘RFU’ for the register is undefined.

The answer to the Selftest (see Section 20.1) for version 1.0 (VersionReg equal to 80h):

00h, AAh, E3h, 29h, 0Ch, 10h, 29zhh, 6Bh,
76h, 8Dh, AFh, 4Bh, A2h, DAh, 76h, 99h
C7h, 5Eh, 24h, 69h, D2h, BAh, FAh, BCh
3Eh, DAh, 96h, B5h, F5h, 94h, B0h, 3Ah
4Eh, C3h, 9Dh, 94h, 76h, 4Ch, EAh, 5Eh
38h, 10h, 8Fh, 2Dh, 21h, 4Bh, 52h, BFh
4Eh, C3h, 9Dh, 94h, 76h, 4Ch, EAh, 5Eh
38h, 10h, 8Fh, 2Dh, 21h, 4Bh, 52h, BFh
FBh, F4h, 19h, 94h, 82h, 5Ah, 72h, 9Dh
BAh, 0Dh, 1Fh, 17h, 56h, 22h, B9h, 08h

Only the default setting for the prescaler (see Section 15 “Timer unit” on page 96): t = ((TPreScaler*2+1)*TReload+1)/13,56 MHz is supported. As such only the formula f_{Timer} = 13,56 MHz/(2*PreScaler+1) is applicable for the TPrescalerHigh in Table 100 “Description of TModeReg bits” on page 57 and TPrescalerLo in Table 101 “TPrescalerReg register (address 2Bh); reset value: 00h, 00000000b” on page 58. As there is no option for the prescaler available, also the TPrescalEven is not available Section 9.2.2.10 on page 45. This bit is set to ‘RFU’.

All information provided in this document is subject to legal disclaimers.

© NXP B.V. 2013. All rights reserved.

Especially when using time slot protocols, it is needed that the error flag is copied into the status information of the frame. When using the RxMultiple feature (see Section 9.2.2.4 on page 39) within version 1.0 the protocol error flag is not included in the status information for the frame. In addition the CRCOk is copied instead of the CRCErr. This can be a problem in frames without length information e.g. ISO/IEC 14443-B.

The version 1.0 does not accept a Type B EOF if there is no 1 bit after the series of 0 bits, as such the configuration within Section 9.2.2.15 “TypeBReg” on page 50 bit 4 for RxEOFReq does not exist. In addition the IC only has the possibility to select the minimum or maximum timings for SOF/EOF generation defined in ISO/IEC14443B. As such the configuration possible in version 2.0 through the EOFSOFAdjust bit (see Section 9.2.4.7 “AutoTestReg” on page 64) does not exist and the configuration is limited to only setting minimum and maximum length according ISO/IEC 14443-B, see Section 9.2.2.15 “TypeBReg” on page 50, bit 4.

22. Application design-in information

The figure below shows a typical circuit diagram, using a complementary antenna connection to the PN512.

The antenna tuning and RF part matching is described in the application note “NFC Transmission Module Antenna and RF Design Guide”.

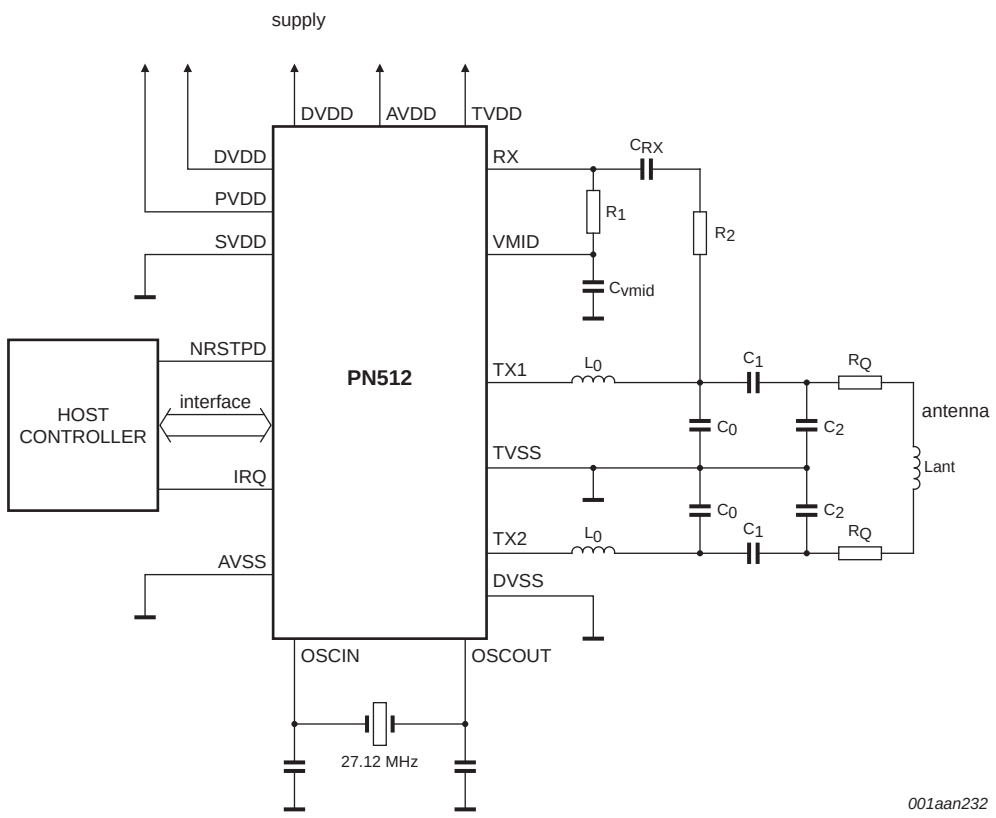

Fig 38. Typical circuit diagram

All information provided in this document is subject to legal disclaimers.

© NXP B.V. 2013. All rights reserved.

23. Limiting values

Table 166. Limiting values

In accordance with the Absolute Maximum Rating System (IEC 60134).

Symbol	Parameter	Conditions	Min	Max	Unit
V_{DDA}	analog supply voltage		–0.5	+4.0	V
V_{DDD}	digital supply voltage		–0.5	+4.0	V
$V_{DD(PVDD)}$	PVDD supply voltage		–0.5	+4.0	V
$V_{DD(TVDD)}$	TVDD supply voltage		–0.5	+4.0	V
$V_{DD(SVDD)}$	SVDD supply voltage		–0.5	+4.0	V
V_I	input voltage	all input pins except pins SIGIN and RX	$V_{SS(PVSS)}$ – 0.5	$V_{DD(PVDD)}$ + 0.5	V
		pin MFIN	$V_{SS(PVSS)}$ – 0.5	$V_{DD(SVDD)}$ + 0.5	V
P_{tot}	total power dissipation	per package; and V_{DDD} in shortcut mode	-	200	mW
T_j	junction temperature		-	125	°C
V_{ESD}	electrostatic discharge voltage	HBM; 1500 Ω, 100 pF; JESD22-A114-B	-	2000	V
		MM; 0.75 μH, 200 pF; JESD22-A114-A	-	200	V
		Charged device model; JESD22-C101-A	-	500	V
Industrial version:					
V_{ESD}	electrostatic discharge voltage	HBM; 1500 Ω, 100 pF; JESD22-A114-B	-	2000	V
		MM; 0.75 μH, 200 pF; JESD22-A114-A	-	200	V
		Charged device model; AEC-Q100-011			
		on all pins	-	200	V
		on all pins except SVDD	-	500	V

24. Recommended operating conditions

Table 167. Operating conditions

Symbol	Parameter	Conditions		Min	Typ	Max	Unit
V_{DDA}	analog supply voltage	$V_{DD(PVDD)} \leq V_{DDA} = V_{DDD} = V_{DD(TVDD)}$; $V_{SSA} = V_{SSD} = V_{SS(PVSS)} = V_{SS(TVSS)} = 0$ V	[1][2]	2.5	-	3.6	V
V_{DDD}	digital supply voltage	$V_{DD(PVDD)} \leq V_{DDA} = V_{DDD} = V_{DD(TVDD)}$; $V_{SSA} = V_{SSD} = V_{SS(PVSS)} = V_{SS(TVSS)} = 0$ V	[1][2]	2.5	-	3.6	V
$V_{DD(TVDD)}$	TVDD supply voltage	$V_{DD(PVDD)} \leq V_{DDA} = V_{DDD} = V_{DD(TVDD)}$; $V_{SSA} = V_{SSD} = V_{SS(PVSS)} = V_{SS(TVSS)} = 0$ V	[1][2]	2.5	-	3.6	V
$V_{DD(PVDD)}$	PVDD supply voltage	$V_{DD(PVDD)} \leq V_{DDA} = V_{DDD} = V_{DD(TVDD)}$; $V_{SSA} = V_{SSD} = V_{SS(PVSS)} = V_{SS(TVSS)} = 0$ V	[3]	1.6	-	3.6	V
$V_{DD(SVDD)}$	SVDD supply voltage	$V_{SSA} = V_{SSD} = V_{SS(PVSS)} = V_{SS(TVSS)} = 0$ V		1.6	-	3.6	V

All information provided in this document is subject to legal disclaimers.

© NXP B.V. 2013. All rights reserved.

Table 167. Operating conditions *...continued*

Symbol	Parameter	Conditions	Min	Typ	Max	Unit
T_{amb}	ambient temperature	HVQFN32, HVQFN40, TFBGA64	–30	-	+85	°C
Industrial version:						
T_{amb}	ambient temperature	HVQFN32	–40	-	+90	°C

[1] Supply voltages below 3 V reduce the performance (the achievable operating distance).

[2] V_{DDA}, V_{DDD} and $V_{DD(TVDD)}$ must always be the same voltage.

[3] $V_{DD(PVDD)}$ must always be the same or lower voltage than V_{DDD}.

25. Thermal characteristics

Table 168. Thermal characteristics

Symbol	Parameter	Conditions	Package	Typ	Unit
R_{thj-a}	Thermal resistance from junction to ambient	In still air with exposed pad soldered on a 4 layer Jedec PCB In still air	HVQFN32	40	K/W
			HVQFN40	35	K/W
			TFBGA64	<tbd>	K/W

26. Characteristics

Table 169. Characteristics

Symbol	Parameter	Conditions	Min	Typ	Max	Unit
Input characteristics						
Pins A0, A1 and NRSTPD						
I_{LI}	input leakage current		–1	-	+1	μA
V_{IH}	HIGH-level input voltage		$0.7V_{DD(PVDD)}$	-	-	V
V_{IL}	LOW-level input voltage		-	-	$0.3V_{DD(PVDD)}$	V
Pin SIGIN						
I_{LI}	input leakage current		–1	-	+1	μA
V_{IH}	HIGH-level input voltage		$0.7V_{DD(SVDD)}$	-	-	V
V_{IL}	LOW-level input voltage		-	-	$0.3V_{DD(SVDD)}$	V
Pin ALE						
I_{LI}	input leakage current		–1	-	+1	μA
V_{IH}	HIGH-level input voltage		$0.7V_{DD(PVDD)}$	-	-	V
V_{IL}	LOW-level input voltage		-	-	$0.3V_{DD(PVDD)}$	V
Pin RX[1]						
V_i	input voltage		–1	-	V_{DDA} +1	V
C_i	input capacitance	V_{DDA} = 3 V; receiver active; $V_{RX(p-p)}$ = 1 V; 1.5 V (DC) offset	-	10	-	pF
R_i	input resistance	V_{DDA} = 3 V; receiver active; $V_{RX(p-p)}$ = 1 V; 1.5 V (DC) offset	-	350	-	Ω
Input voltage range; see Figure 39						

All information provided in this document is subject to legal disclaimers.

© NXP B.V. 2013. All rights reserved.

Table 169. Characteristics *...continued*

Symbol	Parameter	Conditions	Min	Typ	Max	Unit
$V_{i(p-p)(min)}$	minimum peak-to-peak input voltage	Manchester encoded; V_{DDA} = 3 V	-	100	-	mV
$V_{i(p-p)(max)}$	maximum peak-to-peak input voltage	Manchester encoded; V_{DDA} = 3 V	-	4	-	V
Input sensitivity; see Figure 39						
V_{mod}	modulation voltage	minimum Manchester encoded; V_{DDA} = 3 V; RxGain[2:0] = 111b (48 dB)	-	5	-	mV
Pin OSCIN						
I_{LI}	input leakage current		–1	-	+1	μA
V_{IH}	HIGH-level input voltage		$0.7V_{DDA}$	-	-	V
V_{IL}	LOW-level input voltage		-	-	$0.3V_{DDA}$	V
C_i	input capacitance	V_{DDA} = 2.8 V; DC = 0.65 V; AC = 1 V (p-p)	-	2	-	pF
Input/output characteristics						
pins D1, D2, D3, D4, D5, D6 and D7						
I_{LI}	input leakage current		–1	-	+1	μA
V_{IH}	HIGH-level input voltage		$0.7V_{DD(PVDD)}$	-	-	V
V_{IL}	LOW-level input voltage		-	-	$0.3V_{DD(PVDD)}$	V
V_{OH}	HIGH-level output voltage	$V_{DD(PVDD)}$ = 3 V; I_O = 4 mA	$V_{DD(PVDD)}$ − 0.4	-	$V_{DD(PVDD)}$	V
V_{OL}	LOW-level output voltage	$V_{DD(PVDD)}$ = 3 V; I_O = 4 mA	$V_{SS(PVSS)}$	-	$V_{SS(PVSS)}$ + 0.4	V
I_{OH}	HIGH-level output current	$V_{DD(PVDD)}$ = 3 V	-	-	4	mA
I_{OL}	LOW-level output current	$V_{DD(PVDD)}$ = 3 V	-	-	4	mA
Output characteristics						
Pin SIGOUT						
V_{OH}	HIGH-level output voltage	$V_{DD(SVDD)}$ = 3 V; I_O = 4 mA	$V_{DD(SVDD)}$ − 0.4	-	$V_{DD(SVDD)}$	V
V_{OL}	LOW-level output voltage	$V_{DD(SVDD)}$ = 3 V; I_O = 4 mA	$V_{SS(PVSS)}$	-	$V_{SS(PVSS)}$ + 0.4	V
I_{OL}	LOW-level output current	$V_{DD(SVDD)}$ = 3 V	-	-	4	mA
I_{OH}	HIGH-level output current	$V_{DD(SVDD)}$ = 3 V	-	-	4	mA
Pin IRQ						
V_{OH}	HIGH-level output voltage	$V_{DD(PVDD)}$ = 3 V; I_O = 4 mA	$V_{DD(PVDD)}$ − 0.4	-	$V_{DD(PVDD)}$	V
V_{OL}	LOW-level output voltage	$V_{DD(PVDD)}$ = 3 V; I_O = 4 mA	$V_{SS(PVSS)}$	-	$V_{SS(PVSS)}$ + 0.4	V
I_{OL}	LOW-level output current	$V_{DD(PVDD)}$ = 3 V	-	-	4	mA
I_{OH}	HIGH-level output current	$V_{DD(PVDD)}$ = 3 V	-	-	4	mA
Pins AUX1 and AUX2						
V_{OH}	HIGH-level output voltage	V_{DDD} = 3 V; I_O = 4 mA	V_{DDD} − 0.4	-	V_{DDD}	V
V_{OL}	LOW-level output voltage	V_{DDD} = 3 V; I_O = 4 mA	$V_{SS(PVSS)}$	-	$V_{SS(PVSS)}$ + 0.4	V

All information provided in this document is subject to legal disclaimers.

© NXP B.V. 2013. All rights reserved.

Table 169. Characteristics *...continued*

Symbol	Parameter	Conditions	Min	Typ	Max	Unit
I_{OL}	LOW-level output current	V_{DDD} = 3 V	-	-	4	mA
I_{OH}	HIGH-level output current	V_{DDD} = 3 V	-	-	4	mA
Pins TX1 and TX2						
V_{OL}	LOW-level output voltage	$V_{DD(TVDD)}$ = 3 V; $I_{DD(TVDD)}$ = 32 mA; CWGsP[5:0] = 0Fh	-	-	0.15	V
		$V_{DD(TVDD)}$ = 3 V; $I_{DD(TVDD)}$ = 80 mA; CWGsP[5:0] = 0Fh	-	-	0.4	V
		$V_{DD(TVDD)}$ = 2.5 V; $I_{DD(TVDD)}$ = 32 mA; CWGsP[5:0] = 0Fh	-	-	0.24	V
		$V_{DD(TVDD)}$ = 2.5 V; $I_{DD(TVDD)}$ = 80 mA; CWGsP[5:0] = 0Fh	-	-	0.64	V
V_{OH}	HIGH-level output voltage	$V_{DD(TVDD)}$ = 3 V; $I_{DD(TVDD)}$ = 32 mA; CWGsP[5:0] = 3Fh	$V_{DD(TVDD)}$ − 0.15	-	-	V
		$V_{DD(TVDD)}$ = 3 V; $I_{DD(TVDD)}$ = 80 mA; CWGsP[5:0] = 3Fh	$V_{DD(TVDD)}$ − 0.4	-	-	V
		$V_{DD(TVDD)}$ = 2.5 V; $I_{DD(TVDD)}$ = 32 mA; CWGsP[5:0] = 3Fh	$V_{DD(TVDD)}$ − 0.24	-	-	V
		$V_{DD(TVDD)}$ = 2.5 V; $I_{DD(TVDD)}$ = 80 mA; CWGsP[5:0] = 3Fh	$V_{DD(TVDD)}$ − 0.64	-	-	V
Industrial version:						
V_{OL}	LOW-level output voltage	$V_{DD(TVDD)}$ = 2.5 V; $I_{DD(TVDD)}$ = 32 mA; CWGsP[5:0] = 3Fh	-	-	0.18	V
		$V_{DD(TVDD)}$ = 2.5 V; $I_{DD(TVDD)}$ = 80 mA; CWGsP[5:0] = 3Fh	-	-	0.44	V
V_{OH}	HIGH-level output voltage	$V_{DD(TVDD)}$ = 3 V; $I_{DD(TVDD)}$ = 32 mA; CWGsP[5:0] = 3Fh	$V_{DD(TVDD)}$ − 0.18	-	-	V
		$V_{DD(TVDD)}$ = 3 V; $I_{DD(TVDD)}$ = 80 mA; CWGsP[5:0] = 3Fh	$V_{DD(TVDD)}$ − 0.44	-	-	V
Output resistance for TX1/TX2, Industrial Version:						
$R_{OP,01H}$	High level output resistance	TV_{DD} = 3 V, V_{TX} = TV_{DD} - 100 mV, CWGsP = 01h	123	180	261	Ω
$R_{OP,02H}$	High level output resistance	TV_{DD} = 3 V, V_{TX} = TV_{DD} - 100 mV, CWGsP = 02h	61	90	131	Ω
$R_{OP,04H}$	High level output resistance	TV_{DD} = 3 V, V_{TX} = TV_{DD} - 100 mV, CWGsP = 04h	30	46	68	Ω

All information provided in this document is subject to legal disclaimers.

© NXP B.V. 2013. All rights reserved.

Table 169. Characteristics *...continued*

Symbol	Parameter	Conditions		Min	Typ	Max	Unit
$R_{OP,08H}$	High level output resistance	TV_{DD} = 3 V, V_{TX} = TV_{DD} - 100 mV, CWGsP = 08h		15	23	35	Ω
$R_{OP,10H}$	High level output resistance	TV_{DD} = 3 V, V_{TX} = TV_{DD} - 100 mV, CWGsP = 10h		7.5	12	19	Ω
$R_{OP,20H}$	High level output resistance	TV_{DD} = 3 V, V_{TX} = TV_{DD} - 100 mV, CWGsP = 20h		4.2	6	9	Ω
$R_{OP,3FH}$	High level output resistance	TV_{DD} = 3 V, V_{TX} = TV_{DD} - 100 mV, CWGsP = 3Fh		2	3	5	Ω
$R_{ON,10H}$	Low level output resistance	TV_{DD} = 3 V, V_{TX} = TV_{DD} - 100 mV, CWGsN = 10h		30	46	68	Ω
$R_{ON,20H}$	Low level output resistance	TV_{DD} = 3 V, V_{TX} = TV_{DD} - 100 mV, CWGsN = 20h		15	23	35	Ω
$R_{ON,40H}$	Low level output resistance	TV_{DD} = 3 V, V_{TX} = TV_{DD} - 100 mV, CWGsN = 40h		7.5	12	19	Ω
$R_{ON,80H}$	Low level output resistance	TV_{DD} = 3 V, V_{TX} = TV_{DD} - 100 mV, CWGsN = 80h		4.2	6	9	Ω
$R_{ON,F0H}$	Low level output resistance	TV_{DD} = 3 V, V_{TX} = TV_{DD} - 100 mV, CWGsN = F0h		2	3	5	Ω
Current consumption							
I_{pd}	power-down current	V_{DDA} = V_{DDD} = $V_{DD(TVDD)}$ = $V_{DD(PVDD)}$ = 3 V					
		hard power-down; pin NRSTPD set LOW	[2]	-	-	5	μA
		soft power-down; RF level detector on	[2]	-	-	10	μA
$I_{DD(PVDD)}$	PVDD supply current	pin PVDD	[3]	-	-	40	mA
$I_{DD(TVDD)}$	TVDD supply current	pin TVDD; continuous wave	[4][5][6]	-	60	100	mA
$I_{DD(SVDD)}$	SVDD supply current	pin SVDD	[7]	-	-	4	mA
I_{DDD}	digital supply current	pin DVDD; V_{DDD} = 3 V		-	6.5	9	mA
I_{DDA}	analog supply current	pin AVDD; V_{DDA} = 3 V, CommandReg register's RcvOff bit = 0		-	7	10	mA
		pin AVDD; receiver switched off; V_{DDA} = 3 V, CommandReg register's RcvOff bit = 1		-	3	5	mA
Industrial version:							
I_{DDD}	digital supply current	pin DVDD; V_{DDD} = 3 V		-	6.5	9,5	mA
I_{pd}	power-down current	V_{DDA} = V_{DDD} = $V_{DD(TVDD)}$ = $V_{DD(PVDD)}$ = 3 V					
		hard power-down; pin NRSTPD set LOW	[2]	-	-	15	μA
		soft power-down; RF level detector on	[2]	-	-	30	μA
Clock frequency							
f_{clk}	clock frequency			-	27.12	-	MHz

All information provided in this document is subject to legal disclaimers.

© NXP B.V. 2013. All rights reserved.

Table 169. Characteristics *...continued*

Symbol	Parameter	Conditions	Min	Typ	Max	Unit
δ_{clk}	clock duty cycle		40	50	60	%
t_{jit}	jitter time	RMS	-	-	10	ps
Crystal oscillator						
V_{OH}	HIGH-level output voltage	pin OSCOUT	-	1.1	-	V
V_{OL}	LOW-level output voltage	pin OSCOUT	-	0.2	-	V
C_i	input capacitance	pin OSCOUT	-	2	-	pF
		pin OSCIN	-	2	-	pF
Typical input requirements						
f_{xtal}	crystal frequency		-	27.12	-	MHz
ESR	equivalent series resistance		-	-	100	Ω
C_L	load capacitance		-	10	-	pF
P_{xtal}	crystal power dissipation		-	50	100	μW

[1] The voltage on pin RX is clamped by internal diodes to pins AVSS and AVDD.

[2] I_{pd} is the total current for all supplies.

[3] $I_{DD(PVDD)}$ depends on the overall load at the digital pins.

[4] $I_{DD(TVDD)}$ depends on $V_{DD(TVDD)}$ and the external circuit connected to pins TX1 and TX2.

[5] During typical circuit operation, the overall current is below 100 mA.

[6] Typical value using a complementary driver configuration and an antenna matched to 40 Ω between pins TX1 and TX2 at 13.56 MHz.

[7] $I_{DD(SVDD)}$ depends on the load at pin MFOUT.

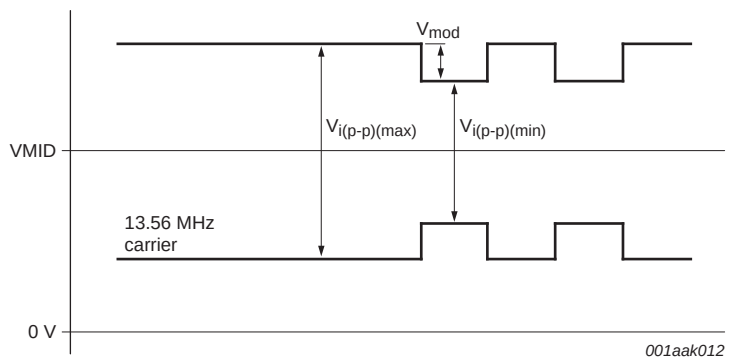

Fig 39. Pin RX input voltage range

All information provided in this document is subject to legal disclaimers.

© NXP B.V. 2013. All rights reserved.

26.1 Timing characteristics

Table 170. SPI timing characteristics

Symbol	Parameter	Conditions	Min	Typ	Max	Unit
t_{WL}	pulse width LOW	line SCK	50	-	-	ns
t_{WH}	pulse width HIGH	line SCK	50	-	-	ns
$t_{h(SCKH-D)}$	SCK HIGH to data input hold time	SCK to changing MOSI	25	-	-	ns
$t_{su(D-SCKH)}$	data input to SCK HIGH set-up time	changing MOSI to SCK	25	-	-	ns
$t_{h(SCKL-Q)}$	SCK LOW to data output hold time	SCK to changing MISO	-	-	25	ns
$t_{(SCKL-NSSH)}$	SCK LOW to NSS HIGH time		0	-	-	ns

Table 171. I²C-bus timing in Fast mode

Symbol	Parameter	Conditions	Fast mode		High-speed mode		Unit
			Min	Max	Min	Max	
f_{SCL}	SCL clock frequency		0	400	0	3400	kHz
$t_{HD;STA}$	hold time (repeated) START condition	after this period, the first clock pulse is generated	600	-	160	-	ns
$t_{SU;STA}$	set-up time for a repeated START condition		600	-	160	-	ns
$t_{SU;STO}$	set-up time for STOP condition		600	-	160	-	ns
t_{LOW}	LOW period of the SCL clock		1300	-	160	-	ns
t_{HIGH}	HIGH period of the SCL clock		600	-	60	-	ns
$t_{HD;DAT}$	data hold time		0	900	0	70	ns
$t_{SU;DAT}$	data set-up time		100	-	10	-	ns
t_r	rise time	SCL signal	20	300	10	40	ns
t_f	fall time	SCL signal	20	300	10	40	ns
t_r	rise time	SDA and SCL signals	20	300	10	80	ns
t_f	fall time	SDA and SCL signals	20	300	10	80	ns
t_{BUF}	bus free time between a STOP and START condition		1.3	-	1.3	-	µs

All information provided in this document is subject to legal disclaimers.

© NXP B.V. 2013. All rights reserved.

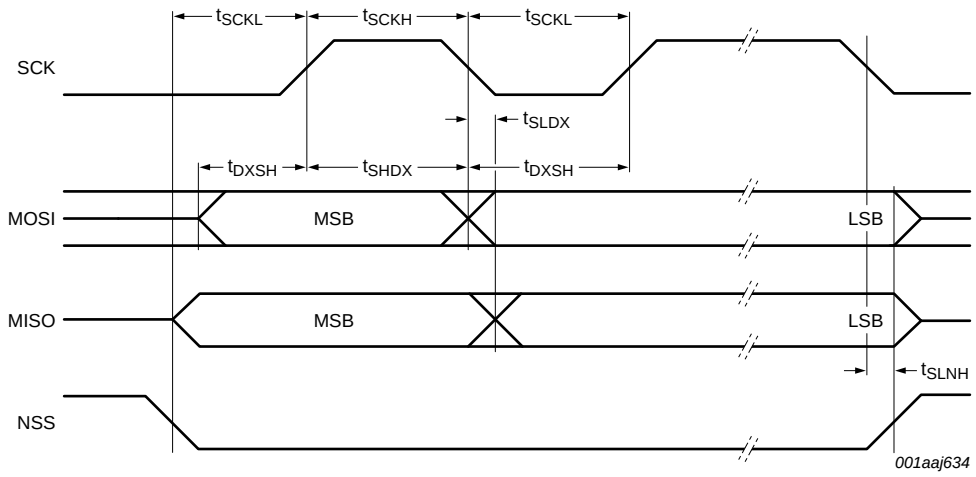

Remark: The signal NSS must be LOW to be able to send several bytes in one data stream. To send more than one data stream NSS must be set HIGH between the data streams.

Fig 40. Timing diagram for SPI

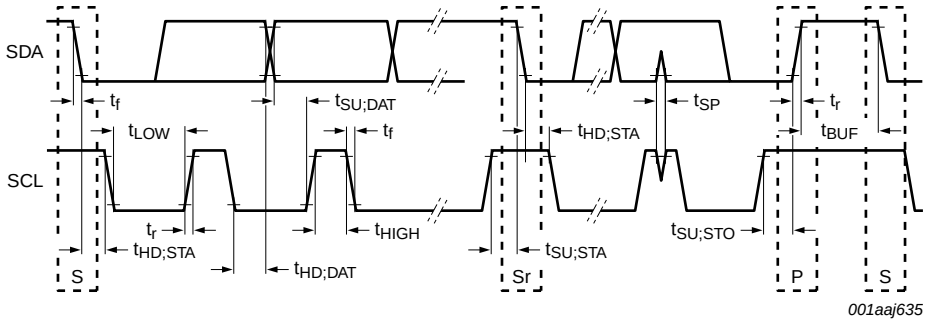

Fig 41. Timing for Fast and Standard mode devices on the I²C-bus

All information provided in this document is subject to legal disclaimers.

© NXP B.V. 2013. All rights reserved.

26.2 8-bit parallel interface timing

26.2.1 AC symbols

Each timing symbol has five characters. The first character is always 't' for time. The other characters indicate the name of a signal or the logic state of that signal (depending on position):

Table 172. AC symbols

Designation	Signal	Designation	Logic Level
A	address	H	HIGH
D	data	L	LOW
W	NWR or nWait	Z	high impedance
R	NRD or R/NW or nWrite	X	any level or data
L	ALE or AS	V	any valid signal or data
C	NCS	N	NSS
S	NDS or nDStrb and nAStrb, SCK		

Example: t_{AVLL} = time for address valid to ALE low

26.2.2 AC operating specification

26.2.2.1 Bus timing for separated Read/Write strobe

Table 173. Timing specification for separated Read/Write strobe

Symbol	Parameter	Min	Max	Unit
t_{LHLL}	ALE pulse width	10	-	ns
t_{AVLL}	Multiplexed Address Bus valid to ALE low (Address Set Up Time)	5	-	ns
t_{LLAX}	Multiplexed Address Bus valid after ALE low (Address Hold Time)	5	-	ns
t_{LLWL}	ALE low to NWR, NRD low	10	-	ns
t_{CLWL}	NCS low to NRD, NWR low	0	-	ns
t_{WHCH}	NRD, NWR high to NCS high	0	-	ns
t_{RLDV}	NRD low to DATA valid	-	35	ns
t_{RHDZ}	NRD high to DATA high impedance	-	10	ns
t_{DVWH}	DATA valid to NWR high	5	-	ns
t_{WHDX}	DATA hold after NWR high (Data Hold Time)	5	-	ns
t_{WLWH}	NRD, NWR pulse width	40	-	ns
t_{AVWL}	Separated Address Bus valid to NRD, NWR low (Set Up Time)	30	-	ns
t_{WHAX}	Separated Address Bus valid after NWR high (Hold Time)	5	-	ns
t_{WHWL}	period between sequenced read/write accesses	40	-	ns

All information provided in this document is subject to legal disclaimers.

© NXP B.V. 2013. All rights reserved.

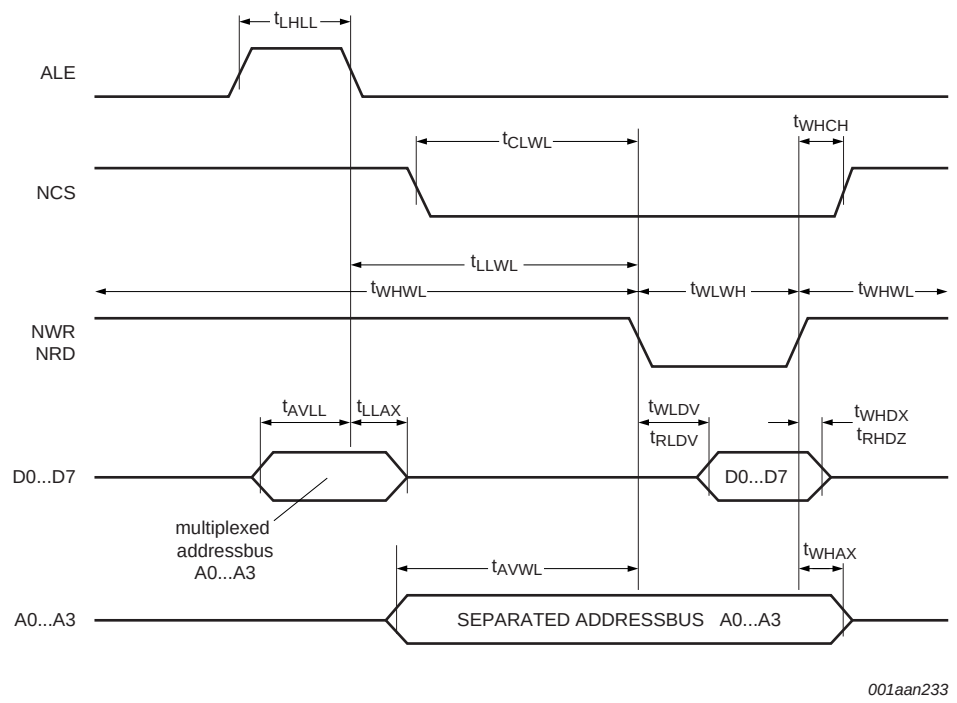

Fig 42. Timing diagram for separated Read/Write strobe

Remark: For separated address and data bus the signal ALE is not relevant and the multiplexed addresses on the data bus don't care.

For the multiplexed address and data bus the address lines A0 to A3 have to be connected as described in chapter Automatic host controller Interface Type Detection.

26.2.2.2 Bus timing for common Read/Write strobe

Table 174. Timing specification for common Read/Write strobe

Symbol	Parameter	Min	Max	Unit
t_{LHLL}	AS pulse width	10	-	ns
t_{AVLL}	Multiplexed Address Bus valid to AS low (Address Set Up Time)	5	-	ns
t_{LLAX}	Multiplexed Address Bus valid after AS low (Address Hold Time)	5	-	ns
t_{LLSL}	AS low to NDS low	10	-	ns
t_{CLSL}	NCS low to NDS low	0	-	ns
t_{SHCH}	NDS high to NCS high	0	-	ns
$t_{SLDV,R}$	NDS low to DATA valid (for read cycle)	-	35	ns
t_{SHDZ}	NDS low to DATA high impedance (read cycle)	-	10	ns
t_{DVSH}	DATA valid to NDS high (for write cycle)	5	-	ns
t_{SHDX}	DATA hold after NDS high (write cycle, Hold Time)	5	-	ns
t_{SHRX}	R/NW hold after NDS high	5	-	ns
t_{SLSH}	NDS pulse width	40	-	ns
t_{AVSL}	Separated Address Bus valid to NDS low (Hold Time)	30	-	ns
t_{SHAX}	Separated Address Bus valid after NDS high (Set Up Time)	5	-	ns

All information provided in this document is subject to legal disclaimers.

© NXP B.V. 2013. All rights reserved.

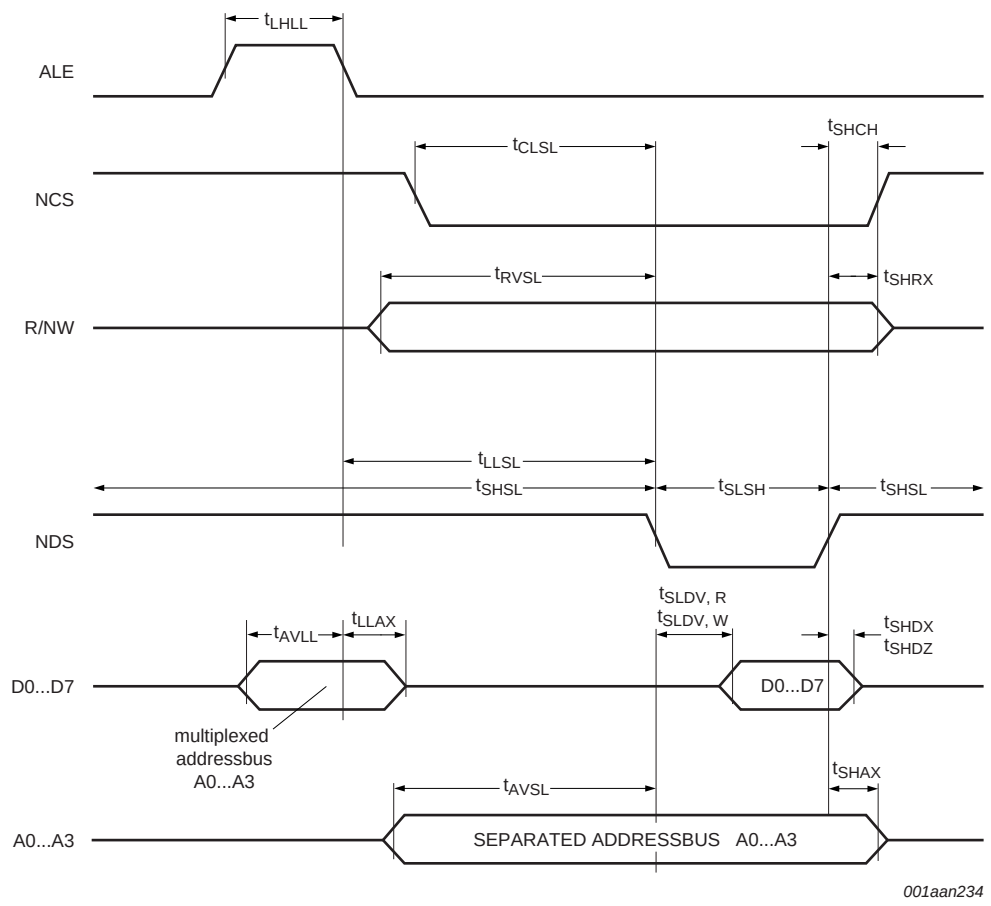

Fig 43. Timing diagram for common Read/Write strobe

Remark: For separated address and data bus the signal ALE is not relevant and the multiplexed addresses on the data bus don't care. For the multiplexed address and data bus the address lines A0 to A3 have to be connected as described in Automatic μ-Controller Interface Type Detection.

All information provided in this document is subject to legal disclaimers.

© NXP B.V. 2013. All rights reserved.

27. Package information

The PN512 can be delivered in 3 different packages.

Table 175. Package information

Package	Remarks
HVQFN32	8-bit parallel interface not supported
HVQFN40	Supports the 8-bit parallel interface
TFBGA64	Ball grid array facilitating development of an PCI compliant device

All information provided in this document is subject to legal disclaimers.

© NXP B.V. 2013. All rights reserved.

28. Package outline

HVQFN32: plastic thermal enhanced very thin quad flat package; no leads; 32 terminals; body 5 x 5 x 0.85 mm **SOT617-1**

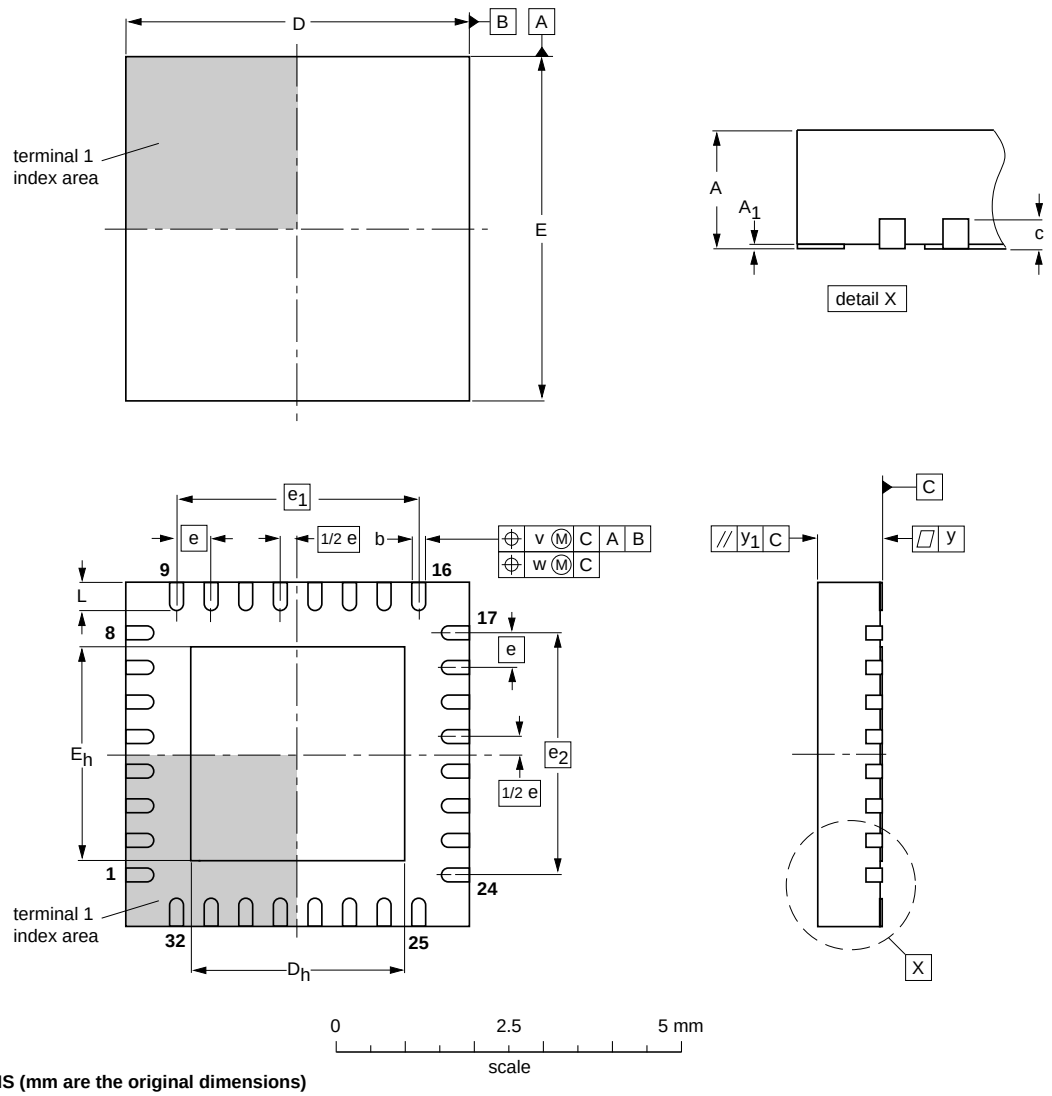

DIMENSIONS (mm are the original dimensions)

UNIT	A(1) max.	A_1	b	c	D(1)	D_h	E(1)	E_h	e	e_1	e_2	L	v	w	y	y_1
mm	1	0.05 0.00	0.30 0.18	0.2	5.1 4.9	3.25 2.95	5.1 4.9	3.25 2.95	0.5	3.5	3.5	0.5 0.3	0.1	0.05	0.05	0.1

Note

1. Plastic or metal protrusions of 0.075 mm maximum per side are not included.

OUTLINE VERSION	REFERENCES				EUROPEAN PROJECTION	ISSUE DATE
	IEC	JEDEC	JEITA			
SOT617-1	- - -	MO-220	- - -			~~01-08-08~~ 02-10-18

Fig 44. Package outline package version (HVQFN32)

All information provided in this document is subject to legal disclaimers.

© NXP B.V. 2013. All rights reserved.

HVQFN40: plastic thermal enhanced very thin quad flat package; no leads; 40 terminals; body 6 x 6 x 0.85 mm **SOT618-1**

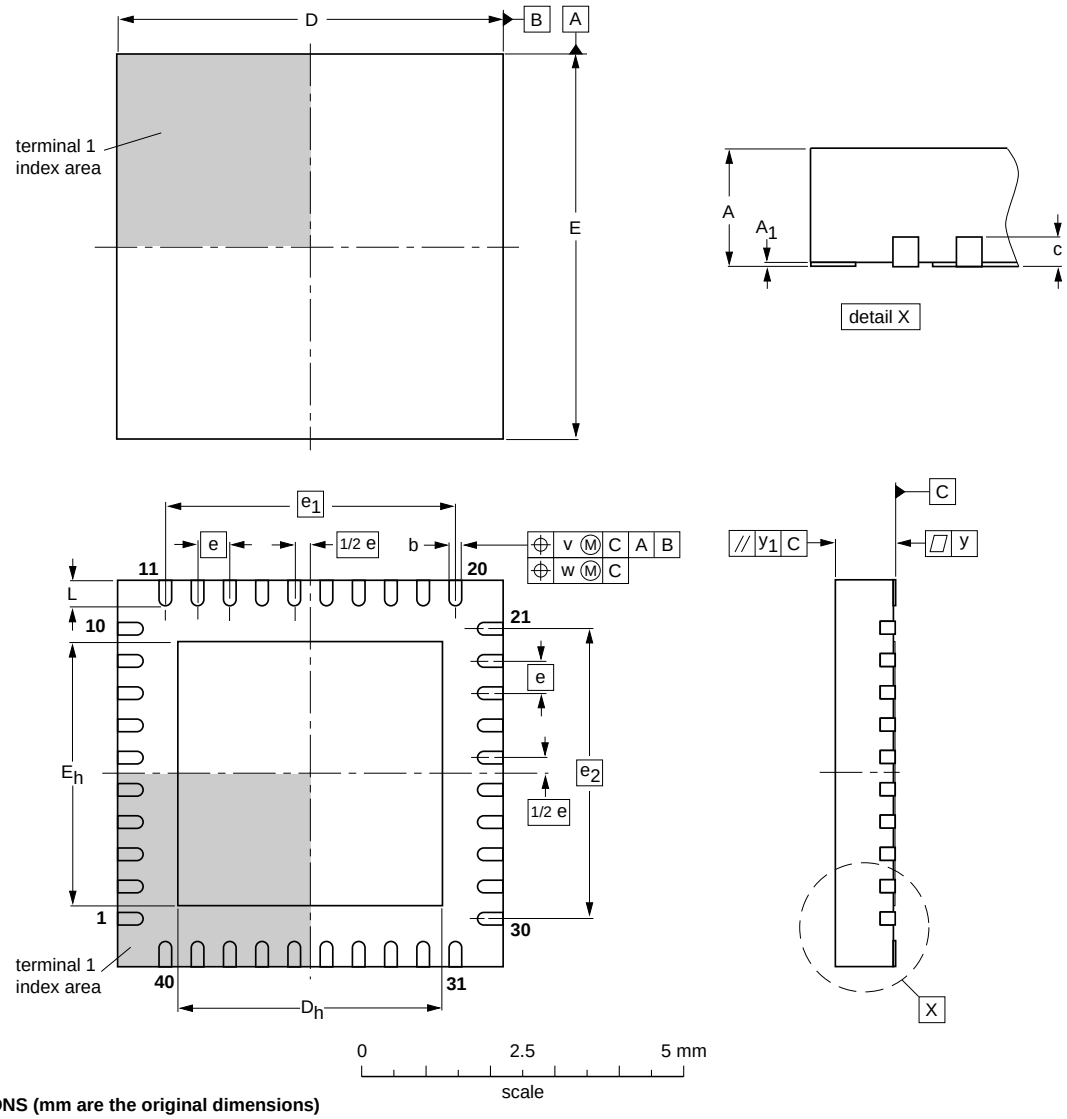

DIMENSIONS (mm are the original dimensions)

UNIT	A(1) max.	A_1	b	c	D(1)	D_h	E(1)	E_h	e	e_1	e_2	L	v	w	y	y_1
mm	1	0.05 0.00	0.30 0.18	0.2	6.1 5.9	4.25 3.95	6.1 5.9	4.25 3.95	0.5	4.5	4.5	0.5 0.3	0.1	0.05	0.05	0.1

Note

1. Plastic or metal protrusions of 0.075 mm maximum per side are not included.

OUTLINE VERSION	REFERENCES				EUROPEAN PROJECTION	ISSUE DATE
	IEC	JEDEC	JEITA			
SOT618-1	- - -	MO-220	- - -			~~01-08-08~~ 02-10-22

Fig 45. Package outline package version (HVQFN40)

All information provided in this document is subject to legal disclaimers.

© NXP B.V. 2013. All rights reserved.

TFBGA64: plastic thin fine-pitch ball grid array package; 64 balls **SOT1336-1**

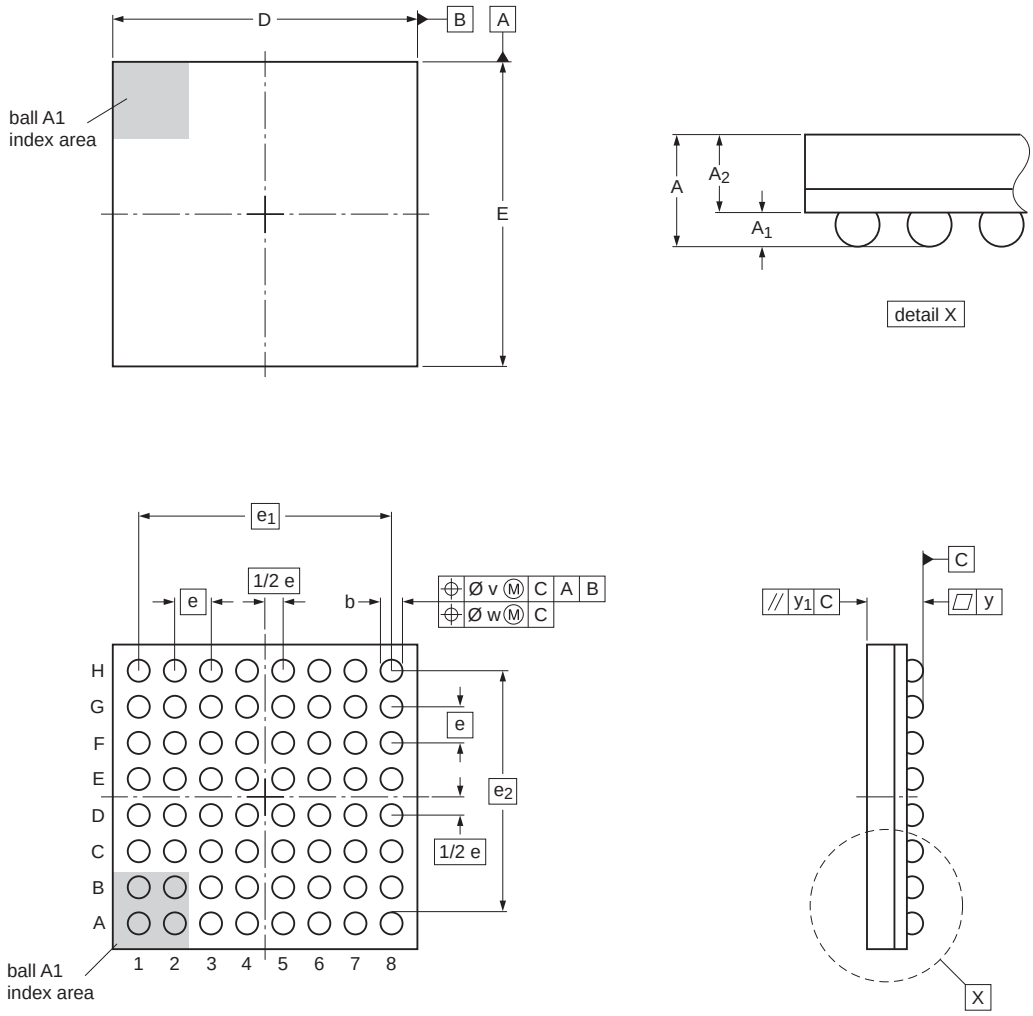

0 5 mm
scale

Dimensions (mm are the original dimensions)

Unit		A	A_1	A_2	b	D	E	e	e_1	e_2	v	w	y	y_1
mm	max	1.15	0.35	0.80	0.45	5.6	5.6							
	nom	1.00	0.30	0.70	0.40	5.5	5.5	0.65	4.55	4.55	0.15	0.08	0.1	0.1
	min	0.90	0.25	0.65	0.35	5.4	5.4							

sot1336-1_po

Outline version	References				European projection	Issue date
	IEC	JEDEC	JEITA			
SOT1336-1		- - -				~~12-06-19~~ 12-08-28

Fig 46. Package outline package version (TFBGA64)

All information provided in this document is subject to legal disclaimers.

© NXP B.V. 2013. All rights reserved.

29. Abbreviations

Table 176. Abbreviations

Acronym	Description
ADC	Analog-to-Digital Converter
ASK	Amplitude Shift keying
BPSK	Binary Phase Shift Keying
CRC	Cyclic Redundancy Check
CW	Continuous Wave
DAC	Digital-to-Analog Converter
EOF	End of frame
HBM	Human Body Model
I^2C	Inter-integrated Circuit
LSB	Least Significant Bit
MISO	Master In Slave Out
MM	Machine Model
MOSI	Master Out Slave In
MSB	Most Significant Bit
NSS	Not Slave Select
PCB	Printed-Circuit Board
PLL	Phase-Locked Loop
PRBS	Pseudo-Random Bit Sequence
RX	Receiver
SOF	Start Of Frame
SPI	Serial Peripheral Interface
TX	Transmitter
UART	Universal Asynchronous Receiver Transmitter

30. Glossary

Modulation index — Defined as the voltage ratio $(V_{max} - V_{min}) / (V_{max} + V_{min})$.

Load modulation index — Defined as the voltage ratio for the card $(V_{max} - V_{min}) / (V_{max} + V_{min})$ measured at the card's coil.

Initiator — Generates RF field at 13.56 MHz and starts the NFCIP-1 communication.

Target — Responds to command either using load modulation scheme (RF field generated by Initiator) or using modulation of self generated RF field (no RF field generated by initiator).

31. References

[1] Application note — NFC Transmission Module Antenna and RF Design Guide

All information provided in this document is subject to legal disclaimers.

© NXP B.V. 2013. All rights reserved.

32. Revision history

Table 177. Revision history

Document ID	Release date	Data sheet status	Change notice	Supersedes
PN512 v.4.3	20130507	Product data sheet	-	PN512 v.4.2
Modifications:	• New type PN5120A0ET/C2 added • Table 72 “Description of MifNFCReg bits”: description of TxWait updated • Table 153 “Register and bit settings controlling the signal on pin TX1” and Table 153 “Register and bit settings controlling the signal on pin TX1”: updated • Table 166 “Limiting values”: V_{ESD} values added			
PN512 v.4.2	20120828	Product data sheet	-	PN512 v.4.1
Modifications:	• Table 123 “AutoTestReg register (address 36h); reset value: 40h, 01000000b”: description of bits 4 and 5 corrected			
PN512 v.4.1	20120821	Product data sheet	-	PN512 v.4.0
Modifications:	• Table 124 “Description of bits”: description of bits 4 and 5 corrected			
PN512 v.4.0	20120712	Product data sheet	-	PN512 v.3.9
Modifications:	• Section 33.4 “Licenses”: updated			
PN512 v.3.9	20120201	Product data sheet	-	PN512 v.3.8
Modifications:	• Adding information on the different version in General description. • Adding Section 21 “Errata sheet” on page 109 for explanation of differences between 1.0 and 2.0. • Adding ordering information for version 1.0 and industrial version in Table 2 “Ordering information” on page 5 • Adding the limitations and characteristics for the industrial version, see Table 1 “Quick reference data” on page 4, Table 166 “Limiting values” on page 111, Table 1 “Quick reference data” on page 4 • Referring to the Section 21 “Errata sheet” on page 109 within the following sections: Section 9.2.2.4 “RxModeReg” on page 39, Section 9.2.2.10 “DemodReg” on page 45, Section 9.2.2.15 “TypeBReg” on page 50, Section 9.2.3.10 “TMode Register, TPrescaler Register” on page 57, Section 9.2.4.7 “AutoTestReg” on page 64, Section 9.2.4.8 “VersionReg” on page 64, Section 9.1.1 “Register bit behavior” on page 23, Section 15 “Timer unit” on page 96, Section 20 “Testsignals” on page 107; • Update of command ‘Mem’ to ‘Configure’ and ‘RFU’ to ‘Autocoll’ in Table 158 “Command overview” on page 101. • Change of ‘Mem’ to ‘Configure’ in ‘Mem’ in Section 19.3.1.2 “Config command” on page 101 • Adding Autocoll in Section 19.3.1.9 “AutoColl” on page 103			
PN512 v.3.8	20111025	Product data sheet	-	PN512 v.3.7
Modifications:	• Table 168 “Characteristics”: unit of P_{xtal} corrected			
111310	June 2005	Objective data sheet	-	
Modifications:	• Initial version			

All information provided in this document is subject to legal disclaimers.

© NXP B.V. 2013. All rights reserved.

33. Legal information

33.1 Data sheet status

Document status[1][2]	Product status[3]	Definition
Objective [short] data sheet	Development	This document contains data from the objective specification for product development.
Preliminary [short] data sheet	Qualification	This document contains data from the preliminary specification.
Product [short] data sheet	Production	This document contains the product specification.

[1] Please consult the most recently issued document before initiating or completing a design.

[2] The term 'short data sheet' is explained in section "Definitions".

[3] The product status of device(s) described in this document may have changed since this document was published and may differ in case of multiple devices. The latest product status information is available on the Internet at URL http://www.nxp.com.

33.2 Definitions

Draft — The document is a draft version only. The content is still under internal review and subject to formal approval, which may result in modifications or additions. NXP Semiconductors does not give any representations or warranties as to the accuracy or completeness of information included herein and shall have no liability for the consequences of use of such information.

Short data sheet — A short data sheet is an extract from a full data sheet with the same product type number(s) and title. A short data sheet is intended for quick reference only and should not be relied upon to contain detailed and full information. For detailed and full information see the relevant full data sheet, which is available on request via the local NXP Semiconductors sales office. In case of any inconsistency or conflict with the short data sheet, the full data sheet shall prevail.

Product specification — The information and data provided in a Product data sheet shall define the specification of the product as agreed between NXP Semiconductors and its customer, unless NXP Semiconductors and customer have explicitly agreed otherwise in writing. In no event however, shall an agreement be valid in which the NXP Semiconductors product is deemed to offer functions and qualities beyond those described in the Product data sheet.

33.3 Disclaimers

Limited warranty and liability — Information in this document is believed to be accurate and reliable. However, NXP Semiconductors does not give any representations or warranties, expressed or implied, as to the accuracy or completeness of such information and shall have no liability for the consequences of use of such information. NXP Semiconductors takes no responsibility for the content in this document if provided by an information source outside of NXP Semiconductors.

In no event shall NXP Semiconductors be liable for any indirect, incidental, punitive, special or consequential damages (including - without limitation - lost profits, lost savings, business interruption, costs related to the removal or replacement of any products or rework charges) whether or not such damages are based on tort (including negligence), warranty, breach of contract or any other legal theory.

Notwithstanding any damages that customer might incur for any reason whatsoever, NXP Semiconductors' aggregate and cumulative liability towards customer for the products described herein shall be limited in accordance with the *Terms and conditions of commercial sale* of NXP Semiconductors.

Right to make changes — NXP Semiconductors reserves the right to make changes to information published in this document, including without limitation specifications and product descriptions, at any time and without notice. This document supersedes and replaces all information supplied prior to the publication hereof.

Suitability for use — NXP Semiconductors products are not designed, authorized or warranted to be suitable for use in life support, life-critical or safety-critical systems or equipment, nor in applications where failure or malfunction of an NXP Semiconductors product can reasonably be expected to result in personal injury, death or severe property or environmental damage. NXP Semiconductors and its suppliers accept no liability for inclusion and/or use of NXP Semiconductors products in such equipment or applications and therefore such inclusion and/or use is at the customer's own risk.

Applications — Applications that are described herein for any of these products are for illustrative purposes only. NXP Semiconductors makes no representation or warranty that such applications will be suitable for the specified use without further testing or modification.

Customers are responsible for the design and operation of their applications and products using NXP Semiconductors products, and NXP Semiconductors accepts no liability for any assistance with applications or customer product design. It is customer's sole responsibility to determine whether the NXP Semiconductors product is suitable and fit for the customer's applications and products planned, as well as for the planned application and use of customer's third party customer(s). Customers should provide appropriate design and operating safeguards to minimize the risks associated with their applications and products.

NXP Semiconductors does not accept any liability related to any default, damage, costs or problem which is based on any weakness or default in the customer's applications or products, or the application or use by customer's third party customer(s). Customer is responsible for doing all necessary testing for the customer's applications and products using NXP Semiconductors products in order to avoid a default of the applications and the products or of the application or use by customer's third party customer(s). NXP does not accept any liability in this respect.

Limiting values — Stress above one or more limiting values (as defined in the Absolute Maximum Ratings System of IEC 60134) will cause permanent damage to the device. Limiting values are stress ratings only and (proper) operation of the device at these or any other conditions above those given in the Recommended operating conditions section (if present) or the Characteristics sections of this document is not warranted. Constant or repeated exposure to limiting values will permanently and irreversibly affect the quality and reliability of the device.

Terms and conditions of commercial sale — NXP Semiconductors products are sold subject to the general terms and conditions of commercial sale, as published at http://www.nxp.com/profile/terms, unless otherwise agreed in a valid written individual agreement. In case an individual agreement is concluded only the terms and conditions of the respective agreement shall apply. NXP Semiconductors hereby expressly objects to applying the customer's general terms and conditions with regard to the purchase of NXP Semiconductors products by customer.

No offer to sell or license — Nothing in this document may be interpreted or construed as an offer to sell products that is open for acceptance or the grant, conveyance or implication of any license under any copyrights, patents or other industrial or intellectual property rights.

All information provided in this document is subject to legal disclaimers.

© NXP B.V. 2013. All rights reserved.

Export control — This document as well as the item(s) described herein may be subject to export control regulations. Export might require a prior authorization from competent authorities.

Quick reference data — The Quick reference data is an extract of the product data given in the Limiting values and Characteristics sections of this document, and as such is not complete, exhaustive or legally binding.

Non-automotive qualified products — Unless this data sheet expressly states that this specific NXP Semiconductors product is automotive qualified, the product is not suitable for automotive use. It is neither qualified nor tested in accordance with automotive testing or application requirements. NXP Semiconductors accepts no liability for inclusion and/or use of non-automotive qualified products in automotive equipment or applications.

In the event that customer uses the product for design-in and use in automotive applications to automotive specifications and standards, customer (a) shall use the product without NXP Semiconductors' warranty of the product for such automotive applications, use and specifications, and (b) whenever customer uses the product for automotive applications beyond NXP Semiconductors' specifications such use shall be solely at customer's own risk, and (c) customer fully indemnifies NXP Semiconductors for any liability, damages or failed product claims resulting from customer design and use of the product for automotive applications beyond NXP Semiconductors' standard warranty and NXP Semiconductors' product specifications.

33.4 Licenses

Purchase of NXP ICs with ISO/IEC 14443 type B functionality	
RATP/Innovatron Technology	This NXP Semiconductors IC is ISO/IEC 14443 Type B software enabled and is licensed under Innovatron's Contactless Card patents license for ISO/IEC 14443 B. The license includes the right to use the IC in systems and/or end-user equipment.

Purchase of NXP ICs with NFC technology
Purchase of an NXP Semiconductors IC that complies with one of the Near Field Communication (NFC) standards ISO/IEC 18092 and ISO/IEC 21481 does not convey an implied license under any patent right infringed by implementation of any of those standards.

33.5 Trademarks

Notice: All referenced brands, product names, service names and trademarks are the property of their respective owners.

I²C-bus — logo is a trademark of NXP B.V.

MIFARE — is a trademark of NXP B.V.

34. Contact information

For more information, please visit: **http://www.nxp.com**

For sales office addresses, please send an email to: **salesaddresses@nxp.com**

All information provided in this document is subject to legal disclaimers.

© NXP B.V. 2013. All rights reserved.

35. Tables

Table 1. Quick reference data 4
Table 2. Ordering information 5
Table 3. Pin description HVQFN32 10
Table 4. Pin description HVQFN40 11
Table 5. Pin description TFBGA64 12
Table 6. Communication overview for ISO/IEC 14443 A/MIFARE reader/writer 14
Table 7. Communication overview for FeliCa reader/writer 16
Table 8. FeliCa framing and coding 16
Table 9. Start value for the CRC Polynomial: (00h), (00h)16
Table 10. Communication overview for Active communication mode 18
Table 11. Communication overview for Passive communication mode 19
Table 12. Framing and coding overview. 20
Table 13. MIFARE Card operation mode 20
Table 14. FeliCa Card operation mode 21
Table 15. PN512 registers overview 21
Table 16. Behavior of register bits and its designation . . . 23
Table 17. PageReg register (address 00h); reset value: 00h, 0000000b 24
Table 18. Description of PageReg bits 24
Table 19. CommandReg register (address 01h); reset value: 20h, 00100000b 24
Table 20. Description of CommandReg bits 24
Table 21. CommIEnReg register (address 02h); reset value: 80h, 10000000b 25
Table 22. Description of CommIEnReg bits 25
Table 23. DivIEnReg register (address 03h); reset value: 00h, 00000000b 26
Table 24. Description of DivIEnReg bits 26
Table 25. CommIRqReg register (address 04h); reset value: 14h, 00010100b 27
Table 26. Description of CommIRqReg bits 27
Table 27. DivIRqReg register (address 05h); reset value: XXh, 000X00XXb 28
Table 28. Description of DivIRqReg bits 28
Table 29. ErrorReg register (address 06h); reset value: 00h, 00000000b 29
Table 30. Description of ErrorReg bits 29
Table 31. Status1Reg register (address 07h); reset value: XXh, X100X01Xb 30
Table 32. Description of Status1Reg bits 30
Table 33. Status2Reg register (address 08h); reset value: 00h, 00000000b 31
Table 34. Description of Status2Reg bits 31
Table 35. FIFODataReg register (address 09h); reset value: XXh, XXXXXXXXb 32
Table 36. Description of FIFODataReg bits 32
Table 37. FIFOLevelReg register (address 0Ah); reset value: 00h, 00000000b 32
Table 38. Description of FIFOLevelReg bits. 32
Table 39. WaterLevelReg register (address 0Bh); reset value: 08h, 00001000b 33
Table 40. Description of WaterLevelReg bits 33
Table 41. ControlReg register (address 0Ch); reset value: 00h, 00000000b 33
Table 42. Description of ControlReg bits 33
Table 43. BitFramingReg register (address 0Dh); reset value: 00h, 00000000b 34
Table 44. Description of BitFramingReg bits 34
Table 45. CollReg register (address 0Eh); reset value: XXh, 101XXXXXb 35
Table 46. Description of CollReg bits. 35
Table 47. PageReg register (address 10h); reset value: 00h, 00000000b 36
Table 48. Description of PageReg bits 36
Table 49. ModeReg register (address 11h); reset value: 3Bh, 00111011b 37
Table 50. Description of ModeReg bits 37
Table 51. TxModeReg register (address 12h); reset value: 00h, 00000000b 38
Table 52. Description of TxModeReg bits 38
Table 53. RxModeReg register (address 13h); reset value: 00h, 00000000b 39
Table 54. Description of RxModeReg bits 39
Table 55. TxControlReg register (address 14h); reset value: 80h, 10000000b 40
Table 56. Description of TxControlReg bits 40
Table 57. TxAutoReg register (address 15h); reset value: 00h, 00000000b 41
Table 58. Description of TxAutoReg bits 41
Table 59. TxSelReg register (address 16h); reset value: 10h, 00010000b 42
Table 60. Description of TxSelReg bits 42
Table 61. RxSelReg register (address 17h); reset value: 84h, 10000100b 44
Table 62. Description of RxSelReg bits 44
Table 63. RxThresholdReg register (address 18h); reset value: 84h, 10000100b 44
Table 64. Description of RxThresholdReg bits 44
Table 65. DemodReg register (address 19h); reset value: 4Dh, 01001101b. 45
Table 66. Description of DemodReg bits 45
Table 67. FelNFC1Reg register (address 1Ah); reset value: 00h, 00000000b 46
Table 68. Description of FelNFC1Reg bits 46
Table 69. FelNFC2Reg register (address1Bh); reset value: 00h, 00000000b 47
Table 70. Description of FelNFC2Reg bits 47
Table 71. MifNFCReg register (address 1Ch); reset value: 62h, 01100010b 48
Table 72. Description of MifNFCReg bits. 48
Table 73. ManualRCVReg register (address 1Dh); reset value: 00h, 00000000b 49
Table 74. Description of ManualRCVReg bits 49
Table 75. TypeBReg register (address 1Eh); reset value: 00h, 00000000b 50
Table 76. Description of TypeBReg bits. 50
Table 77. SerialSpeedReg register (address 1Fh); reset value: EBh, 11101011b 51

All information provided in this document is subject to legal disclaimers.

© NXP B.V. 2013. All rights reserved.

Table 78. Description of SerialSpeedReg bits 51
Table 79. PageReg register (address 20h); reset value: 00h, 00000000b 52
Table 80. Description of PageReg bits 52
Table 81. CRCResultReg register (address 21h); reset value: FFh, 11111111b. 52
Table 82. Description of CRCResultReg bits 52
Table 83. CRCResultReg register (address 22h); reset value: FFh, 11111111b. 52
Table 84. Description of CRCResultReg bits 52
Table 85. GsNOffReg register (address 23h); reset value: 88h, 10001000b 53
Table 86. Description of GsNOffReg bits 53
Table 87. ModWidthReg register (address 24h); reset value: 26h, 00100110b 54
Table 88. Description of ModWidthReg bits 54
Table 89. TxBitPhaseReg register (address 25h); reset value: 87h, 10000111b 54
Table 90. Description of TxBitPhaseReg bits 54
Table 91. RFCfgReg register (address 26h); reset value: 48h, 01001000b 55
Table 92. Description of RFCfgReg bits 55
Table 93. GsNOnReg register (address 27h); reset value: 88h, 10001000b 56
Table 94. Description of GsNOnReg bits 56
Table 95. CWGsPReg register (address 28h); reset value: 20h, 00100000b 56
Table 96. Description of CWGsPReg bits. 56
Table 97. ModGsPReg register (address 29h); reset value: 20h, 00100000b 57
Table 98. Description of ModGsPReg bits 57
Table 99. TModeReg register (address 2Ah); reset value: 00h, 00000000b 57
Table 100. Description of TModeReg bits 57
Table 101. TPrescalerReg register (address 2Bh); reset value: 00h, 00000000b 58
Table 102. Description of TPrescalerReg bits 58
Table 103. TReloadReg (Higher bits) register (address 2Ch); reset value: 00h, 00000000b 59
Table 104. Description of the higher TReloadReg bits . . .59
Table 105. TReloadReg (Lower bits) register (address 2Dh); reset value: 00h, 00000000b 59
Table 106. Description of lower TReloadReg bits 59
Table 107. TCounterValReg (Higher bits) register (address 2Eh); reset value: XXh, XXXXXXXXb 60
Table 108. Description of the higher TCounterValReg bits 60
Table 109. TCounterValReg (Lower bits) register (address 2Fh); reset value: XXh, XXXXXXXXb. 60
Table 110. Description of lower TCounterValReg bits 60
Table 111. PageReg register (address 30h); reset value: 00h, 00000000b 60
Table 112. Description of PageReg bits. 61
Table 113. TestSel1Reg register (address 31h); reset value: 00h, 00000000b 62
Table 114. Description of TestSel1Reg bits 62
Table 115. TestSel2Reg register (address 32h); reset value: 00h, 00000000b 62
Table 116. Description of TestSel2Reg bits 62
Table 117. TestPinEnReg register (address 33h); reset value: 80h, 10000000b 63
Table 118. Description of TestPinEnReg bits 63
Table 119. TestPinValueReg register (address 34h); reset value: 00h, 00000000b 63
Table 120. Description of TestPinValueReg bits 63
Table 121. TestBusReg register (address 35h); reset value: XXh, XXXXXXXXb 64
Table 122. Description of TestBusReg bits 64
Table 123. AutoTestReg register (address 36h); reset value: 40h, 01000000b 64
Table 124. Description of bits 64
Table 125. VersionReg register (address 37h); reset value: XXh, XXXXXXXXb 65
Table 126. Description of VersionReg bits 65
Table 127. AnalogTestReg register (address 38h); reset value: 00h, 00000000b 66
Table 128. Description of AnalogTestReg bits 66
Table 129. TestDAC1Reg register (address 39h); reset value: XXh, 00XXXXXXb 67
Table 130. Description of TestDAC1Reg bits 67
Table 131. TestDAC2Reg register (address 3Ah); reset value: XXh, 00XXXXXXb 67
Table 132. Description ofTestDAC2Reg bits. 67
Table 133. TestADCReg register (address 3Bh); reset value: XXh, XXXXXXXXb 67
Table 134. Description of TestADCReg bits 67
Table 135. RFTReg register (address 3Ch); reset value: FFh, 11111111b 68
Table 136. Description of RFTReg bits 68
Table 137. RFTReg register (address 3Dh, 3Fh); reset value: 00h, 00000000b 68
Table 138. Description of RFTReg bits 68
Table 139. RFTReg register (address 3Eh); reset value: 03h, 00000011b 68
Table 140. Description of RFTReg bits 68
Table 141. Connection protocol for detecting different interface types 69
Table 142. Connection scheme for detecting the different interface types 69
Table 143. MOSI and MISO byte order 70
Table 144. MOSI and MISO byte order 71
Table 145. Address byte 0 register; address MOSI 71
Table 146. BR_T0 and BR_T1 settings 72
Table 147. Selectable UART transfer speeds 72
Table 148. UART framing 72
Table 149. Read data byte order 73
Table 150. Write data byte order 73
Table 151. Address byte 0 register; address MOSI 75
Table 152. Supported interface types 82
Table 153. Register and bit settings controlling the signal on pin TX1 84
Table 154. Register and bit settings controlling the signal on pin TX2 85
Table 155. Setting of the bits RFlevel in register RFCfgReg (RFLevel amplifier deactivated) 86
Table 156. CRC coprocessor parameters 93
Table 157. Interrupt sources 95

All information provided in this document is subject to legal disclaimers.

© NXP B.V. 2013. All rights reserved.

Table 158. Command overview 101
Table 159. Testsignal routing (TestSel2Reg = 07h) 107
Table 160. Description of Testsignals 107
Table 161. Testsignal routing (TestSel2Reg = 0Dh) 108
Table 162. Description of Testsignals 108
Table 163. Testsignal routing (TestSel2Reg = 19h) 108
Table 164. Description of Testsignals 108
Table 165. Testsignals description. 108
Table 166. Limiting values 111
Table 167. Operating conditions 111
Table 168. Thermal characteristics 112
Table 169. Characteristics 112
Table 170. SPI timing characteristics 116
Table 171. I^2C-bus timing in Fast mode 117
Table 172. AC symbols 119
Table 173. Timing specification for separated Read/Write strobe 119
Table 174. Timing specification for common Read/Write strobe 120
Table 175. Package information 122
Table 176. Abbreviations 126
Table 177. Revision history 127

All information provided in this document is subject to legal disclaimers.

© NXP B.V. 2013. All rights reserved.

36. Figures

Fig 1. Simplified block diagram of the PN512 6
Fig 2. Detailed block diagram of the PN512 7
Fig 3. Pinning configuration HVQFN32 (SOT617-1) 8
Fig 4. Pinning configuration HVQFN40 (SOT618-1) 8
Fig 5. Pin configuration TFBGA64 (SOT1336-1) 9
Fig 6. PN512 Read/Write mode 14
Fig 7. ISO/IEC 14443 A/MIFARE Read/Write mode communication diagram 14
Fig 8. Data coding and framing according to ISO/IEC 14443 A 15
Fig 9. FeliCa reader/writer communication diagram . . .16
Fig 10. NFCIP-1 mode 17
Fig 11. Active communication mode 18
Fig 12. Passive communication mode 19
Fig 13. SPI connection to host 70
Fig 14. UART connection to microcontrollers 71
Fig 15. UART read data timing diagram 73
Fig 16. UART write data timing diagram 74
Fig 17. I^2C-bus interface 75
Fig 18. Bit transfer on the I^2C-bus 76
Fig 19. START and STOP conditions 76
Fig 20. Acknowledge on the I^2C-bus 77
Fig 21. Data transfer on the I^2C-bus 77
Fig 22. First byte following the START procedure 78
Fig 23. Register read and write access 79
Fig 24. I^2C-bus HS mode protocol switch 80
Fig 25. I^2C-bus HS mode protocol frame 81
Fig 26. Connection to host controller with separated Read/Write strobes 83
Fig 27. Connection to host controller with common Read/Write strobes 83
Fig 28. Data mode detector 87
Fig 29. Serial data switch for TX1 and TX2 88
Fig 30. Communication flows using the S^2C interface . . .89
Fig 31. Signal shape for SIGOUT in FeliCa card SAM mode 90
Fig 32. Signal shape for SIGIN in SAM mode 90
Fig 33. Signal shape for SIGOUT in MIFARE Card SAM mode 91
Fig 34. Signal shape for SIGIN in MIFARE Card SAM mode 91
Fig 35. Quartz crystal connection 99
Fig 36. Oscillator start-up time 100
Fig 37. Autocoll Command 104
Fig 38. Typical circuit diagram 110
Fig 39. Pin RX input voltage range 116
Fig 40. Timing diagram for SPI 118
Fig 41. Timing for Fast and Standard mode devices on the I^2C-bus 118
Fig 42. Timing diagram for separated Read/Write strobe 120
Fig 43. Timing diagram for common Read/Write strobe 121
Fig 44. Package outline package version (HVQFN32) .123
Fig 45. Package outline package version (HVQFN40) .124
Fig 46. Package outline package version (TFBGA64). .125

All information provided in this document is subject to legal disclaimers.

© NXP B.V. 2013. All rights reserved.

37. Contents

1 Introduction . . . 1
1.1 Different available versions. . . . 1
2 General description . . . 1
3 Features and benefits . . . 3
4 Quick reference data . . . 4
5 Ordering information . . . 5
6 Block diagram . . . 6
7 Pinning information . . . 8
7.1 Pinning . . . 8
7.2 Pin description . . . 10
8 Functional description . . . 13
8.1 ISO/IEC 14443 A/MIFARE functionality . . . 13
8.2 ISO/IEC 14443 B functionality . . . 14
8.3 FeliCa reader/writer functionality . . . 15
8.3.1 FeliCa framing and coding . . . 15
8.4 NFCIP-1 mode . . . 16
8.4.1 Active communication mode . . . 17
8.4.2 Passive communication mode . . . 18
8.4.3 NFCIP-1 framing and coding . . . 19
8.4.4 NFCIP-1 protocol support . . . 19
8.4.5 MIFARE Card operation mode . . . 19
8.4.6 FeliCa Card operation mode . . . 20
9 PN512 register SET . . . 20
9.1 PN512 registers overview. . . . 20
9.1.1 Register bit behavior. . . . 22
9.2 Register description . . . 23
9.2.1 Page 0: Command and status . . . 23
9.2.1.1 PageReg. . . . 23
9.2.1.2 CommandReg . . . 23
9.2.1.3 CommIEnReg . . . 24
9.2.1.4 DivIEnReg . . . 25
9.2.1.5 CommIRqReg . . . 26
9.2.1.6 DivIRqReg . . . 27
9.2.1.7 ErrorReg . . . 28
9.2.1.8 Status1Reg . . . 29
9.2.1.9 Status2Reg . . . 30
9.2.1.10 FIFODataReg . . . 31
9.2.1.11 FIFOLevelReg . . . 31
9.2.1.12 WaterLevelReg . . . 32
9.2.1.13 ControlReg . . . 32
9.2.1.14 BitFramingReg . . . 33
9.2.1.15 CollReg. . . . 34
9.2.2 Page 1: Communication . . . 35
9.2.2.1 PageReg. . . . 35
9.2.2.2 ModeReg . . . 36
9.2.2.3 TxModeReg . . . 37
9.2.2.4 RxModeReg . . . 38
9.2.2.5 TxControlReg . . . 39
9.2.2.6 TxAutoReg . . . 40
9.2.2.7 TxSelReg . . . 41
9.2.2.8 RxSelReg. . . . 43
9.2.2.9 RxThresholdReg . . . 43
9.2.2.10 DemodReg. . . . 44
9.2.2.11 FelNFC1Reg . . . 45
9.2.2.12 FelNFC2Reg . . . 46
9.2.2.13 MifNFCReg . . . 47
9.2.2.14 ManualRCVReg . . . 48
9.2.2.15 TypeBReg . . . 49
9.2.2.16 SerialSpeedReg . . . 49
9.2.3 Page 2: Configuration . . . 51
9.2.3.1 PageReg . . . 51
9.2.3.2 CRCResultReg . . . 51
9.2.3.3 GsNOffReg . . . 52
9.2.3.4 ModWidthReg . . . 53
9.2.3.5 TxBitPhaseReg . . . 53
9.2.3.6 RFCfgReg . . . 54
9.2.3.7 GsNOnReg . . . 55
9.2.3.8 CWGsPReg . . . 55
9.2.3.9 ModGsPReg . . . 56
9.2.3.10 TMode Register, TPrescaler Register . . . 56
9.2.3.11 TReloadReg. . . . 58
9.2.3.12 TCounterValReg . . . 59
9.2.4 Page 3: Test . . . 59
9.2.4.1 PageReg . . . 59
9.2.4.2 TestSel1Reg. . . . 61
9.2.4.3 TestSel2Reg. . . . 61
9.2.4.4 TestPinEnReg . . . 62
9.2.4.5 TestPinValueReg . . . 62
9.2.4.6 TestBusReg . . . 63
9.2.4.7 AutoTestReg . . . 63
9.2.4.8 VersionReg . . . 63
9.2.4.9 AnalogTestReg. . . . 65
9.2.4.10 TestDAC1Reg . . . 66
9.2.4.11 TestDAC2Reg . . . 66
9.2.4.12 TestADCReg . . . 66
9.2.4.13 RFTReg . . . 67
10 Digital interfaces . . . 67
10.1 Automatic microcontroller interface detection 67
10.2 Serial Peripheral Interface . . . 69
10.2.1 SPI read data . . . 69
10.2.2 SPI write data. . . . 69
10.2.3 SPI address byte . . . 70
10.3 UART interface . . . 70
10.3.1 Connection to a host . . . 70

continued >>

All information provided in this document is subject to legal disclaimers.

© NXP B.V. 2013. All rights reserved.

10.3.2 Selectable UART transfer speeds 70
10.3.3 UART framing 71
10.4 I²C Bus Interface 74
10.4.1 Data validity 75
10.4.2 START and STOP conditions 75
10.4.3 Byte format 75
10.4.4 Acknowledge 76
10.4.5 7-Bit addressing 77
10.4.6 Register write access 77
10.4.7 Register read access 78
10.4.8 High-speed mode 79
10.4.9 High-speed transfer 79
10.4.10 Serial data transfer format in HS mode 79
10.4.11 Switching between F/S mode and HS mode . 81
10.4.12 PN512 at lower speed modes 81
11 8-bit parallel interface 81
11.1 Overview of supported host controller interfaces 81
11.2 Separated Read/Write strobe 82
11.3 Common Read/Write strobe 82
12 Analog interface and contactless UART 83
12.1 General 83
12.2 TX driver 83
12.3 RF level detector 84
12.4 Data mode detector 85
12.5 Serial data switch 87
12.6 S²C interface support 87
12.6.1 Signal shape for Felica S²C interface support 89
12.6.2 Waveform shape for ISO/IEC 14443A and MIFARE S²C support 90
12.7 Hardware support for FeliCa and NFC polling 91
12.7.1 Polling sequence functionality for initiator. . . . 91
12.7.2 Polling sequence functionality for target 91
12.7.3 Additional hardware support for FeliCa and NFC 92
12.7.4 CRC coprocessor 92
13 FIFO buffer 93
13.1 Accessing the FIFO buffer 93
13.2 Controlling the FIFO buffer 93
13.3 FIFO buffer status information 93
14 Interrupt request system. 94
14.1 Interrupt sources overview 94
15 Timer unit 95
16 Power reduction modes 97
16.1 Hard power-down 97
16.2 Soft power-down mode. 97
16.3 Transmitter power-down mode 97
17 Oscillator circuitry 98
18 Reset and oscillator start-up time 98
18.1 Reset timing requirements 98
18.2 Oscillator start-up time 98
19 PN512 command set 99
19.1 General description 99
19.2 General behavior 99
19.3 PN512 command overview 100
19.3.1 PN512 command descriptions 100
19.3.1.1 Idle 100
19.3.1.2 Config command 100
19.3.1.3 Generate RandomID 101
19.3.1.4 CalcCRC 101
19.3.1.5 Transmit 101
19.3.1.6 NoCmdChange 101
19.3.1.7 Receive 101
19.3.1.8 Transceive 102
19.3.1.9 AutoColl 102
19.3.1.10 MFAuthent 104
19.3.1.11 SoftReset 105
20 Testsignals. 106
20.1 Selftest 106
20.2 Testbus. 106
20.3 Testsignals at pin AUX 107
20.4 PRBS 108
21 Errata sheet 108
22 Application design-in information. 109
23 Limiting values 110
24 Recommended operating conditions 110
25 Thermal characteristics 111
26 Characteristics 111
26.1 Timing characteristics 115
26.2 8-bit parallel interface timing 118
26.2.1 AC symbols 118
26.2.2 AC operating specification 118
26.2.2.1 Bus timing for separated Read/Write strobe . 118
26.2.2.2 Bus timing for common Read/Write strobe . . 119
27 Package information. 121
28 Package outline. 122
29 Abbreviations 125
30 Glossary. 125
31 References. 125
32 Revision history 126
33 Legal information 127
33.1 Data sheet status 127
33.2 Definitions 127
33.3 Disclaimers 127
33.4 Licenses. 128
33.5 Trademarks 128

continued >>

All information provided in this document is subject to legal disclaimers.

© NXP B.V. 2013. All rights reserved.

34 Contact information 128
35 Tables 129
36 Figures 132
37 Contents 133

Please be aware that important notices concerning this document and the product(s) described herein, have been included in section 'Legal information'.

© NXP B.V. 2013. All rights reserved.

For more information, please visit: http://www.nxp.com
For sales office addresses, please send an email to: salesaddresses@nxp.com

Date of release: 7 May 2013
111343