- **Improved Speed and Package Replacement for the SN75LBC976**
- **Designed to Operate at up to 20 Million Data Transfers per Second (Fast-20 SCSI)**
- **Nine Differential Channels for the Data and Control Paths of the Small Computer Systems Interface (SCSI) and Intelligent Peripheral Interface (IPI)**
- **SN75976A Packaged in Shrink Small-Outline Package with 25-Mil Terminal Pitch (DL) and Thin Shrink Small-Outline Package with 20-Mil Terminal Pitch (DGG)**
- **SN55976A Packaged in a 56-Pin Ceramic Flat Pack (WD)**
- **Two Skew Limits Available**
- **ESD Protection on Bus Terminals Exceeds 12 kV**
- **Low Disabled Supply Current 8 mA Typ**
- **Thermal Shutdown Protection**
- **Positive- and Negative-Current Limiting**
- **Power-Up/Down Glitch Protection**

SN75976A DGG or DL
SN55976A WD
(TOP VIEW)

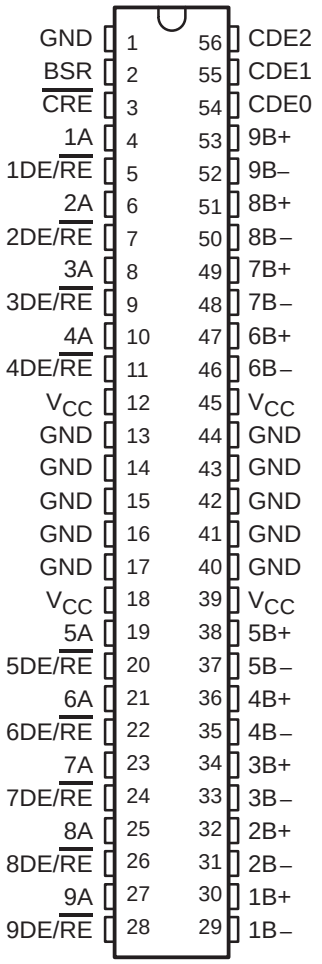

Terminals 13 through 17 and 40 through 44 are connected together to the package lead frame and signal ground.

description

The SN75976A is an improved replacement for the industry's first 9-channel RS-485 transceiver — the SN75LBC976. The A version offers improved switching performance, a smaller package, and higher ESD protection. The SN75976A is offered in two versions. The '976A2 skew limits of 4 ns for the differential drivers and 5 ns for the differential receivers complies with the recommended skew budget of the Fast-20 SCSI standard for data transfer rates up to 20 million transfers per second. The '976A1 supports the Fast SCSI skew budget for 10 million transfers per second. The skew limit ensures that the propagation delay times, not only from channel-to-channel but from device-to-device, are closely matched for the tight skew budgets associated with high-speed parallel data buses.

The patented thermal enhancements made to the 56-pin shrink small-outline package (SSOP) of the SN75976 have been applied to the new, thin shrink, small-outline package (TSSOP). The TSSOP package offers even less board area requirements than the SSOP while reducing the package height to 1 mm. This provides more board area and allows component mounting to both sides of the printed circuit boards for low-profile, space-restricted applications such as small form-factor hard disk drives.

Please be aware that an important notice concerning availability, standard warranty, and use in critical applications of Texas Instruments semiconductor products and disclaimers thereto appears at the end of this data sheet.

PRODUCTION DATA information is current as of publication date. Products conform to specifications per the terms of Texas Instruments standard warranty. Production processing does not necessarily include testing of all parameters.

Copyright © 1997, Texas Instruments Incorporated

description (continued)

In addition to speed improvements, the ’976A can withstand electrostatic discharges exceeding 12 kV using the human-body model, and 600 V using the machine model of MIL-PRF-38535, Method 3015.7 on the RS-485 I/O terminals. This is six times the industry standard and provides protection from the noise that can be coupled into external cables. The other terminals of the device can withstand discharges exceeding 4 kV and 400 V respectively.

Each of the nine channels of the ’976A typically meet or exceed the requirements of EIA RS-485 (1983) and ISO 8482-1987/TIA TR30.2 referenced by American National Standard of Information (ANSI) Systems, X3.131-1994 (SCSI-2) standard, X2.277-1996 (Fast-20 Parallel Interface), and the Intelligent Peripheral Interface Physical Layer-ANSI X3.129-1986 standard.

The SN75976A is characterized for operation over an ambient air temperature range of 0°C to 70°C. The SN55976A is characterized for operation over an ambient air temperature range of –55°C to 125°C.

AVAILABLE OPTIONS

T_A	Skew Limit (ns)		PACKAGE†		
	Driver	Receiver	TSSOP (DGG)	SSOP (DL)	CERAMIC FLAT PACK (WD)
0°C to 70°C	8	9	SN75976A1DGG SN75976A1DGGR	SN75976A1DL SN75976A1DLR	—
	4	5	SN75976A2DGG SN75976A2DGGR	SN75976A2DL SN75976A2DLR	—
–55°C to 125°C	8	9	—	—	SN55976A1WD
	4	5	—	—	SN55976A2WD

† The R suffix indicates taped and reeled packages.

Terminal Functions

TERMINAL NAME	TERMINAL NO.	Logic Level	I/O	Termination	DESCRIPTION
1A to 9A	4,6,8,10, 19,21,23, 25,27	TTL	I/O	Pullup	1A to 9A carry data to and from the communication controller.
1B– to 9B–	29,31,33, 35,37,.46, 48,50,52	RS-485	I/O	Pulldown	1B– to 9B– are the inverted data signals of the balanced pair to/from the bus.
1B+ to 9B+	30,32,34, 36,38,47, 49,51,53	RS-485	I/O	Pullup	1B+ to 9B+ are the noninverted data signals of the balanced pair to/from the bus.
BSR	2	TTL	Input	Pullup	BSR is the bit significant response. BSR disables receivers 1 through 8 and enables wired-OR drivers when BSR and DE/$\overline{\text{RE}}$ and CDE1 or CDE2 are high. Channel 9 is placed in a high-impedance state with BSR high.
CDE0	54	TTL	Input	Pulldown	CDE0 is the common driver enable 0. Its input signal enables all drivers when CDE0 and 1DE/$\overline{\text{RE}}$ – 9DE/$\overline{\text{RE}}$ are high.
CDE1	55	TTL	Input	Pulldown	CDE1 is the common driver enable 1. Its input signal enables drivers 1 to 4 when CDE1 is high and BSR is low.
CDE2	56	TTL	Input	Pulldown	CDE2 is the common driver enable 2. When CDE2 is high and BSR is low, drivers 5 to 8 are enabled.
$\overline{\text{CRE}}$	3	TTL	Input	Pullup	$\overline{\text{CRE}}$ is the common receiver enable. When high, $\overline{\text{CRE}}$ disables receiver channels 5 to 9.
1DE/$\overline{\text{RE}}$ to 9DE/$\overline{\text{RE}}$	5,7,9,11, 20,22,24, 26,28	TTL	Input	Pullup	1DE/$\overline{\text{RE}}$–9DE/$\overline{\text{RE}}$ are direction controls that transmit data to the bus when it and CDE0 are high. Data is received from the bus when 1DE/$\overline{\text{RE}}$–9DE/$\overline{\text{RE}}$ and $\overline{\text{CRE}}$ and BSR are low and CDE1 and CDE2 are low.
GND	1,13,14, 15,16,17, 40,41,42, 43,44	NA	Power	NA	GND is the circuit ground. All GND terminals except terminal 1 are physically tied to the die pad for improved thermal conductivity.†
V_{CC}	12,18,39, 45	NA	Power	NA	Supply voltage

† Terminal 1 must be connected to signal ground for proper operation.

logic diagram (positive logic)

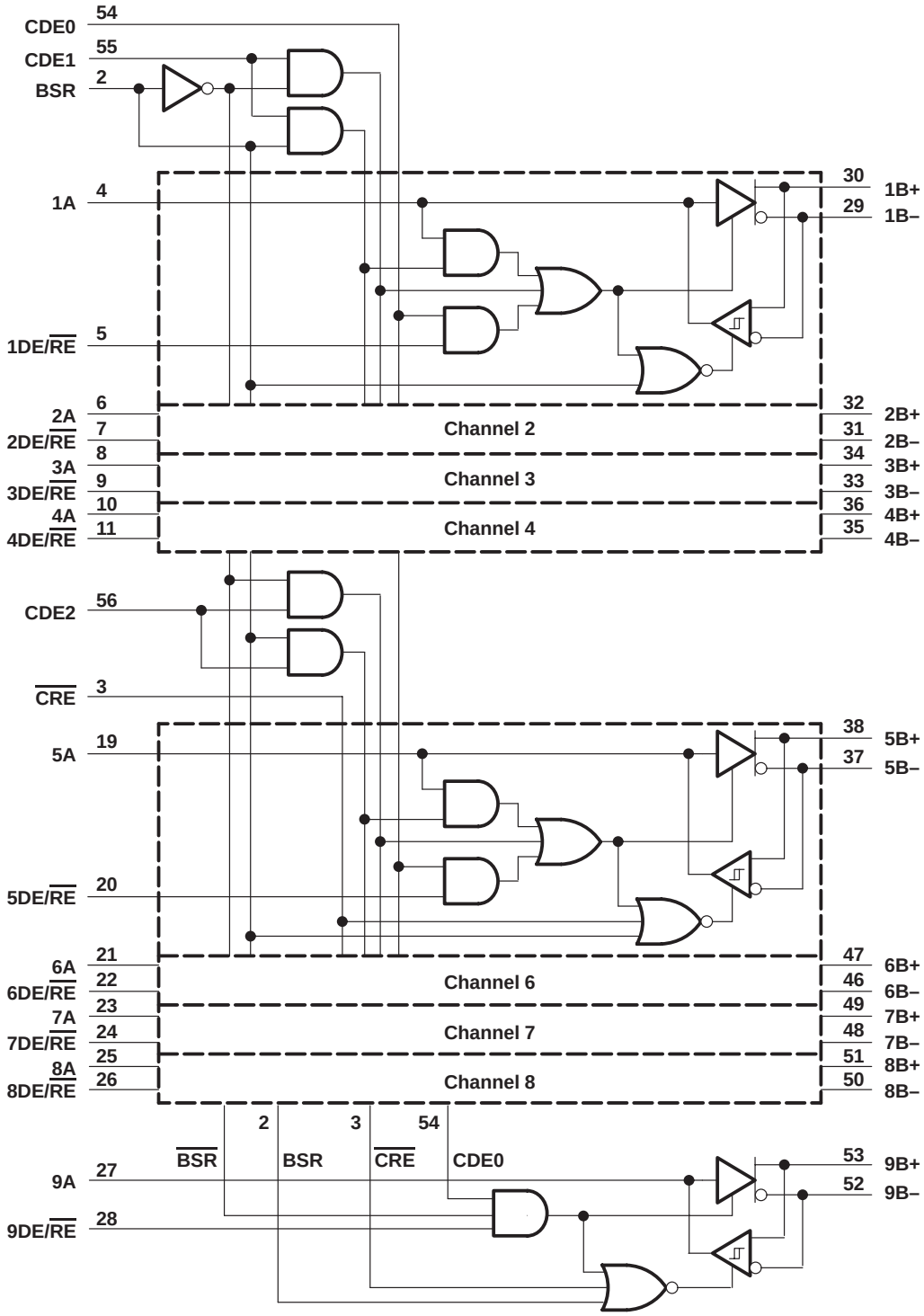

schematics of inputs and outputs

DE/$\overline{RE}$, $\overline{CRE}$, BSR, AND A Inputs

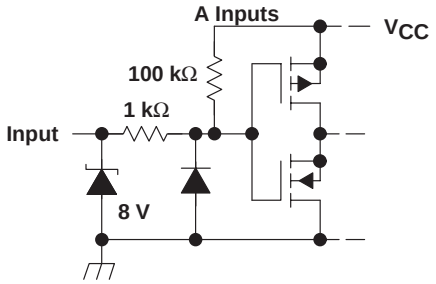

CDE0, CDE1, AND CDE2 Inputs

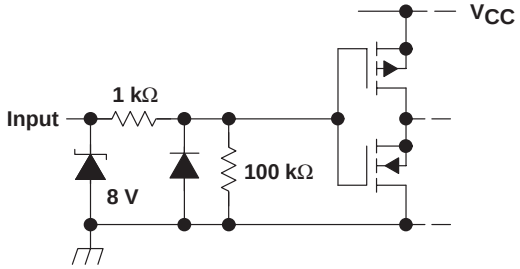

B+ Input

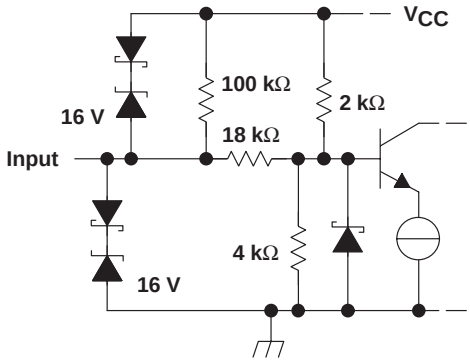

B– Input

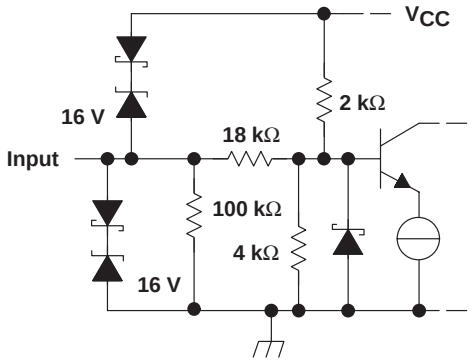

B+ AND B– Outputs

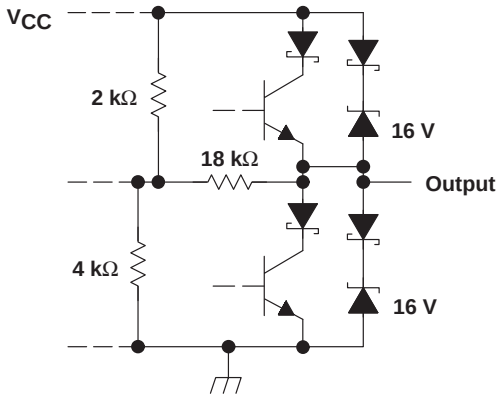

A Output

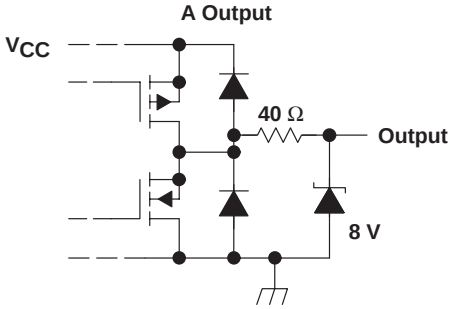

absolute maximum ratings over operating free-air temperature range (unless otherwise noted)†

Supply voltage range, V_{CC} (see Note 1) . . . . . –0.3 V to 6 V
Bus voltage range . . . . . –10 V to 15 V
Data I/O and control (A side) voltage range . . . . . –0.3 V to V_{CC} +0.5 V
Electrostatic discharge: B side and GND, Class 3, A: (see Note 2) . . . . . 12 kV
B side and GND, Class 3, B: (see Note 2) . . . . . 400 V
All terminals, Class 3, A: . . . . . 4 kV
All terminals, Class 3, B: . . . . . 400 V
Continuous total power dissipation (see Note 3) . . . . . internally limited
Storage temperature range, T_{stg} . . . . . –65°C to 150°C
Lead temperature 1,6 mm (1/16 inch) from case for 10 seconds . . . . . 260°C

† Stresses beyond those listed under “absolute maximum ratings” may cause permanent damage to the device. These are stress ratings only, and functional operation of the device at these or any other conditions beyond those indicated under “recommended operating conditions” is not implied. Exposure to absolute-maximum-rated conditions for extended periods may affect device reliability.

NOTES: 1. All voltage values are with respect to the GND terminals.
2. This absolute maximum rating is tested in accordance with MIL-PRF-38535, Method 3015.7.
3. The maximum operating junction temperature is internally limited. Use the Dissipation Rating Table to operate below this temperature.

DISSIPATION RATING TABLE

PACKAGE	$T_A \le 25°C$	OPERATING FACTOR‡ ABOVE $T_A = 25°C$	$T_A = 70°C$ POWER RATING	$T_A = 125°C$ POWER RATING
DGG	2500 mW	20 mW/°C	1600 mW	—
DL	2500 mW	20 mW/°C	1600 mW	—
WD	1300 mW	10.5 mW/°C	827 mW	250 mW

‡ This is the inverse of the junction-to-ambient thermal resistance when board-mounted and with no air flow.

package thermal characteristics

		MIN	NOM	MAX	UNIT
Junction-to-ambient thermal resistance, $R_{\theta JA}$	DGG, board-mounted, no air flow		50		°C/W
	DL, board-mounted, no air flow		50		°C/W
Junction-to-ambient thermal resistance, $R_{\theta JA}$	WD		95.4		°C/W
Junction-to-case thermal resistance, $R_{\theta JC}$	DGG		27		°C/W
	DL		12		°C/W
Junction-to-case thermal resistance, $R_{\theta JC}$	WD		5.67		°C/W
Thermal-shutdown junction temperature, T_{JS}			165		°C

recommended operating conditions

		MIN	NOM	MAX	UNIT
Supply voltage, V_{CC}		4.75	5	5.25	V
High-level input voltage, V_{IH}	Except nB+, nB–†	2			V
Low-level input voltage, V_{IL}	Except nB+, nB–†			0.8	V
Voltage at any bus terminal (separately or common-mode), V_O, V_I, or V_{IC}	nB+ or nB –			12	V
				–7	V
High-level output current, I_{OH}	Driver			–60	mA
	Receiver			–8	mA
Low-level output current, I_{OL}	Driver			60	mA
	Receiver			8	mA
Operating case temperature, T_C	SN75976A	0		125	°C
Operating free-air temperature, T_A	SN75976A	0		70	°C
	SN55976A	–55		125	°C

† n = 1 – 9

electrical characteristics over recommended operating free-air temperature range (unless otherwise noted)

PARAMETER		TEST CONDITIONS	SN55976A			SN75976A			UNIT
			MIN	TYP†	MAX	MIN	TYP†	MAX	
V_{ODH}	Driver differential high-level output voltage	S1 to A, V_T = 5 V, See Figure 1	0.7			1	1.8		V
		S1 to B, $T_C \geq 25°C$, V_T = 5 V, See Figure 1				1	1.4		V
		S1 to B, See Figure 1, V_T = 5 V,	0.7			0.8			V
V_{ODL}	Driver differential low-level output voltage	S1 to A, $T_C \geq 25°C$, V_T = 5 V, See Figure 1	0.7	–1.4		–1	–1.4		V
		S1 to B, V_T = 5 V, See Figure 1	0.7	–1.8		–1	–1.8		V
		S1 to A, See Figure 1, V_T = 5 V,	–0.8	–1.4		–0.8	–1.4		V
V_{OH}	High-level output voltage	A side, I_{OH} = –8 mA, V_{ID} = 200 mV, See Figure 3	4	4.5		4	4.5		V
		B side, V_T = 5 V, See Figure 1		3			3		V
V_{OL}	Low-level output voltage	A side, I_{OH} = 8 mA, V_{ID} = –200 mV, See Figure 3		0.6	0.8		0.6	0.8	V
		A side, V_T = 5 V, See Figure 1		1			1		V
V_{IT+}	Receiver positive-going differential input threshold voltage	I_{OH} = –8 mA, See Figure 3			0.2			0.2	V
$V_{IT–}$	Receiver negative-going differential input threshold voltage	I_{OL} = 8 mA, See Figure 3			–0.2			–0.2	V
V_{hys}	Receiver input hysteresis ($V_{IT+} – V_{IT–}$)	V_{CC} = 5 V, T_A = 25°C	24	45		24	45		mV
I_I	Bus input current	V_{IH} = 12 V, V_{CC} = 5 V, Other input at 0 V		0.4	1		0.4	1	mA
		V_{IH} = 12 V, V_{CC} = 0, Other input at 0 V		0.5	1		0.5	1	mA
		V_{IH} = –7 V, V_{CC} = 5 V, Other input at 0 V		–0.4	–0.8		–0.4	–0.8	mA
		V_{IH} = –7 V, V_{CC} = 0, Other input at 0 V		–0.3	–0.8		–0.3	–0.8	mA
I_{IH}	High-level input current	A, BSR, DE/$\overline{RE}$, and $\overline{CRE}$, V_{IH} = 2 V			–100			–100	µA
		CDE0, CDE1, and CDE2, V_{IH} = 2V			100			100	µA
I_{IL}	Low-level input current	A, BSR, DE/$\overline{RE}$, and $\overline{CRE}$, V_{IL} = 0.8 V			–100			–100	µA
		CDE1, CDE1, and CDE2, V_{IL} = 0.8 V			100			100	µA
I_{OS}	Short circuit output current	nB+ or nB–			±260			±260	mA
I_{OZ}	High-impedance-state output current	A	See I_{IH} and I_{IL}			See I_{IH} and I_{IL}			
		nB+ or nB–	See I_I			See I_I			
I_{CC}	Supply current	Disabled			10			10	mA
		All drivers enabled, no load			60			60	mA
		All receivers enabled, no load			45			45	mA
C_O	Output capacitance	nB+ or nB– to GND		18			18	25	pF
C_{pd}	Power dissipation capacitance (see Note 4)	Receiver		40			40		pF
		Driver		100			100		pF

† All typical values are at V_{CC} = 5 V, T_A = 25°C.

NOTE 4: C_{pd} determines the no-load dynamic supply current consumption, $I_S = C_{PD} \times V_{CC} \times f + I_{CC}$

driver switching characteristics over recommended operating conditions (unless otherwise noted)

PARAMETER			TEST CONDITIONS		SN75976A			UNIT
					MIN	TYP†	MAX	
t_{pd}	Propagation delay time, t_{PHL} or t_{PLH} (see Figures 1 and 2)	’976A1			2.5		13.5	ns
			V_{CC} = 5 V,	T_C = 25°C	3		11	ns
			V_{CC} = 5 V,	T_C = 100°C	5		13	ns
		’976A2			4.5		11.5	ns
			V_{CC} = 5 V,	T_C = 25°C	5		9	ns
			V_{CC} = 5 V,	T_C = 100°C	7		11	ns
$t_{sk(lim)}$	Skew limit, maximum t_{pd} – minimum t_{pd} (see Note 5)	’976A1					8	ns
		’976A2					4	ns
$t_{sk(p)}$	Pulse skew, $\|t_{PHL} - t_{PLH}\|$						4	ns
t_f	Fall time		S1 to B,	See Figure 2		4		ns
t_r	Rise time		See Figure 2			8		ns
t_{en}	Enable time, control inputs to active output						50	ns
t_{dis}	Disable time, control inputs to high-impedance output						100	ns
t_{PHZ}	Propagation delay time, high-level to high-impedance output		See Figures 5 and 6			17	100	ns
t_{PLZ}	Propagation delay time, low-level to high-impedance output					25	100	ns
t_{PZH}	Propagation delay time, high-impedance to high-level output					17	50	ns
t_{PZL}	Propagation delay time, high-impedance to low-level output					17	50	ns

† All typical values are at V_{CC} = 5 V, T_A = 25°C.

NOTE 5: This parameter is applicable at one V_{CC} and operating temperature within the recommended operating conditions and to any two devices.

driver switching characteristics over recommended operating conditions (unless otherwise noted)

PARAMETER			TEST CONDITIONS		SN55976A			UNIT
					MIN	TYP†	MAX	
t_{pd}	Propagation delay time, t_{PHL} or t_{PLH} (see Figures 1 and 2)	’976A1	V_{CC} = 5 V,	T_A = 25°C			15	ns
		’976A2	V_{CC} = 5 V,	T_A = 25°C			13.5	ns
$t_{sk(lim)}$	Skew limit, maximum t_{pd} – minimum t_{pd} (see Note 5)	’976A1					8	ns
		’976A2					4	ns
$t_{sk(p)}$	Pulse skew, $\|t_{PHL} - t_{PLH}\|$						4	ns
t_f	Fall time		S1 to B,	See Figure 2		4		ns
t_r	Rise time		See Figure 2			8		ns
t_{en}	Enable time, control inputs to active output						60	ns
t_{dis}	Disable time, control inputs to high-impedance output						140	ns
t_{PHZ}	Propagation delay time, high-level to high-impedance output		See Figures 5 and 6				120	ns
t_{PLZ}	Propagation delay time, low-level to high-impedance output						120	ns
t_{PZH}	Propagation delay time, high-impedance to high-level output						60	ns
t_{PZL}	Propagation delay time, high-impedance to low-level output						60	ns

† All typical values are at V_{CC} = 5 V, T_A = 25°C.

NOTE 5. This parameter is applicable at one V_{CC} and operating temperature within the recommended operating conditions and to any two devices.

receiver switching characteristics over recommended operating conditions (unless otherwise noted)

PARAMETER			TEST CONDITIONS	SN75976A			UNIT
				MIN	TYP†	MAX	
t_{pd}	Propagation delay time, t_{PHL} or t_{PLH} (see Figures 3 and 4)	’976A1		7.5		16.5	ns
		’976A2		8.5		14.5	ns
			V_{CC} = 5 V, T_C = 25°C	8.6		13.6	ns
			V_{CC} = 5 V, T_C = 100°C	9		14	ns
$t_{sk(lim)}$	Skew limit, maximum t_{pd} – minimum t_{pd} (see Note 5)	’976A1				9	ns
		’976A2				5	ns
$t_{sk(p)}$	Pulse skew, $\|t_{PHL} - t_{PLH}\|$				0.6	4	ns
t_t	Transition time (t_r or t_f)		See Figure 4		2		ns
t_{en}	Enable time, control inputs to active output					50	ns
t_{dis}	Disable time, control inputs to high-impedance output					60	ns
t_{PHZ}	Propagation delay time, high-level to high-impedance output		See Figures 7 and 8			60	ns
t_{PLZ}	Propagation delay time, low-level to high-impedance output					50	ns
t_{PZH}	Propagation delay time, high-impedance to high-level output					50	ns
t_{PZL}	Propagation delay time, high-impedance to low-level output					50	ns

† All typical values are at V_{CC} = 5 V, T_A = 25°C.

NOTE 5. This parameter is applicable at one V_{CC} and operating temperature within the recommended operating conditions and to any two devices.

receiver switching characteristics over recommended operating conditions (unless otherwise noted)

PARAMETER			TEST CONDITIONS	SN55976A			UNIT
				MIN	TYP†	MAX	
t_{pd}	Propagation delay time, t_{PHL} or t_{PLH} (see Figures 3 and 4)	’976A1	V_{CC} = 5 V, T_A = 25°C			19	ns
		’976A2	V_{CC} = 5 V, T_A = 25°C			16	ns
$t_{sk(lim)}$	Skew limit, maximum t_{pd} – minimum t_{pd} (see Note 5)	’976A1				9	ns
		’976A2				5	ns
$t_{sk(p)}$	Pulse skew, $\|t_{PHL} - t_{PLH}\|$				0.6	4	ns
t_t	Transition time (t_r or t_f)		See Figure 4		2		ns
t_{en}	Enable time, control inputs to active output					70	ns
t_{dis}	Disable time, control inputs to high-impedance output					80	ns
t_{PHZ}	Propagation delay time, high-level to high-impedance output		See Figures 7 and 8			80	ns
t_{PLZ}	Propagation delay time, low-level to high-impedance output					70	ns
t_{PZH}	Propagation delay time, high-impedance to high-level output					70	ns
t_{PZL}	Propagation delay time, high-impedance to low-level output					70	ns

† All typical values are at V_{CC} = 5 V, T_A = 25°C.

NOTE 5. This parameter is applicable at one V_{CC} and operating temperature within the recommended operating conditions and to any two devices.

PARAMETER MEASUREMENT INFORMATION

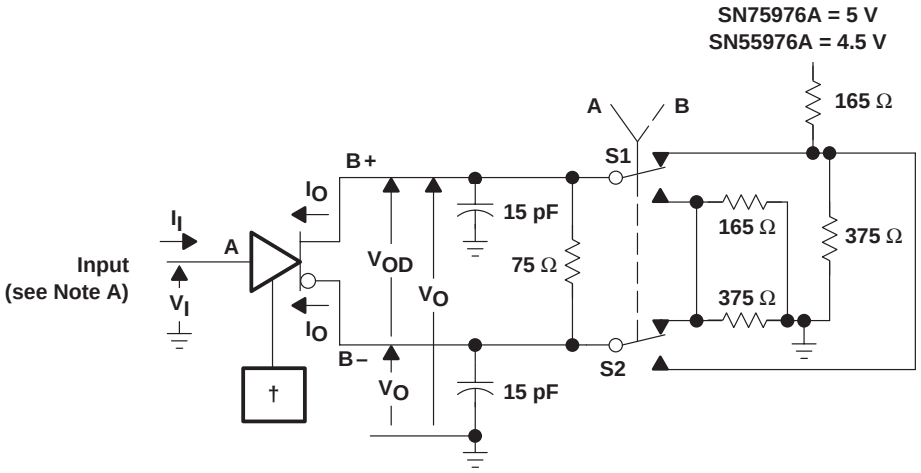

† CDE0 and DE/$\overline{RE}$ are at 2 V, BSR is at 0.8 V and, for the SN75976A only, all others are open.
‡ For the SN75976A only, all nine drivers are enabled, similarly loaded, and switching.

Figure 1. Driver Test Circuit, Currents, and Voltages‡

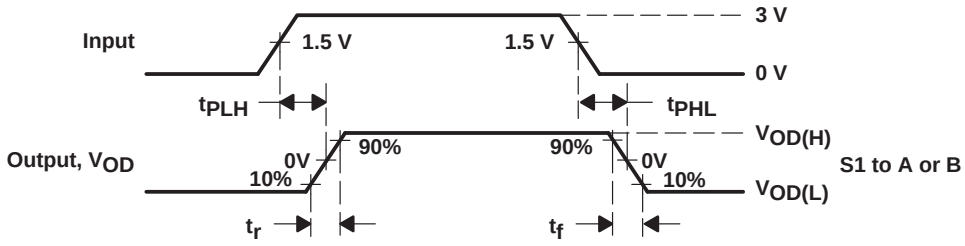

Figure 2. Driver Delay and Transition Time Test Waveforms

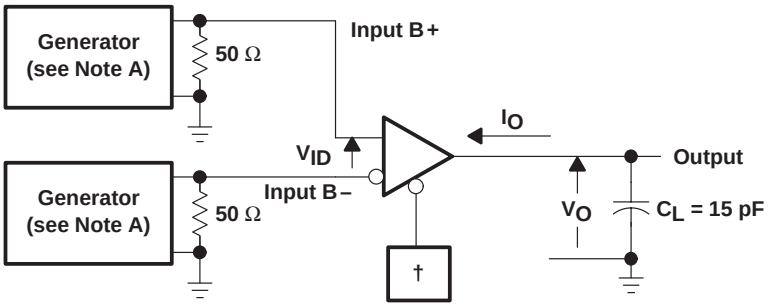

† CDE0, CDE1, CDE2, BSR, CRE, and DE/$\overline{RE}$ at 0.8 V
‡ For the SN75976A only, all nine receivers are enabled and switching.

Figure 3. Receiver Propagation Delay and Transition Time Test Circuit‡

NOTES: A. All input pulses are supplied by a generator having the following characteristics: $t_r \le 6$ ns, $t_f \le 6$ ns, PRR ≤ 1 MHz, duty cycle = 50%, Z_O = 50 Ω.
B. All resistances are in Ω and ± 5%, unless otherwise indicated.
C. All capacitances are in pF and ± 10%, unless otherwise indicated.
D. All indicated voltages are ± 10 mV.

PARAMETER MEASUREMENT INFORMATION

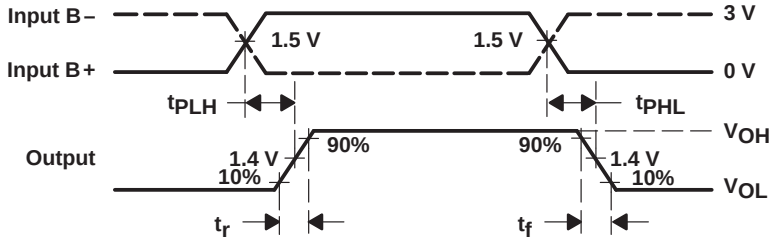

Figure 4. Receiver Delay and Transition Time Waveforms

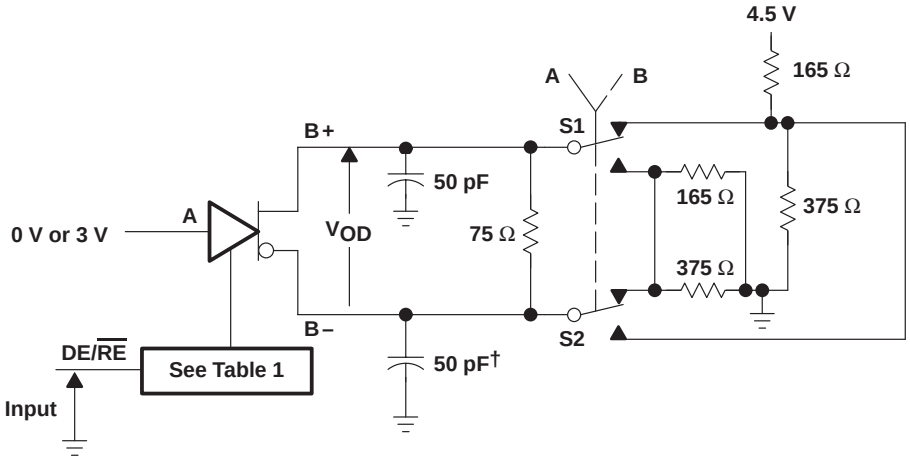

† Includes probe and jig capacitance in two places.

Figure 5. Driver Enable and Disable Time Test Circuit

Table 1. Enabling For Driver Enable And Disable Time

DRIVER	BSR	CDE0	CDE1	CDE2	$\overline{\text{CRE}}$
1 – 8	H	H	L	L	X
9	L	H	H	H	H

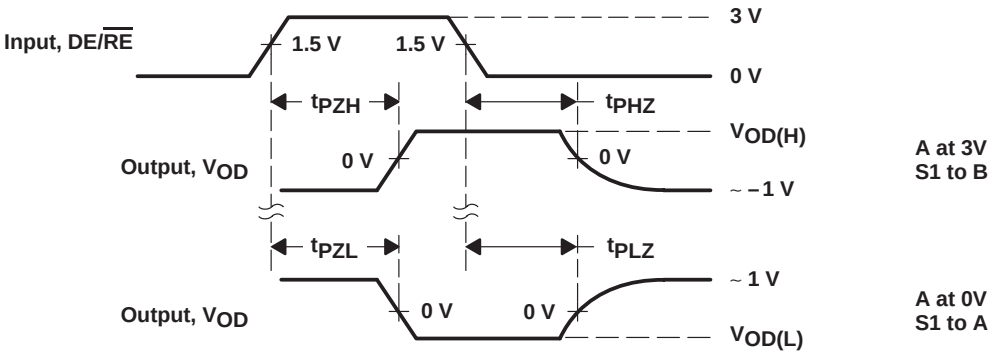

Figure 6. Driver Enable Time Waveforms

NOTES: A. All input pulses are supplied by a generator having the following characteristics: $t_r \le 6$ ns, $t_f \le 6$ ns, PRR ≤ 1 MHz, duty cycle = 50%, $Z_O = 50\ \Omega$.
B. All resistances are in Ω and ± 5%, unless otherwise indicated.
C. All capacitances are in pF and ± 10%, unless otherwise indicated.
D. All indicated voltages are ± 10 mV.

PARAMETER MEASUREMENT INFORMATION

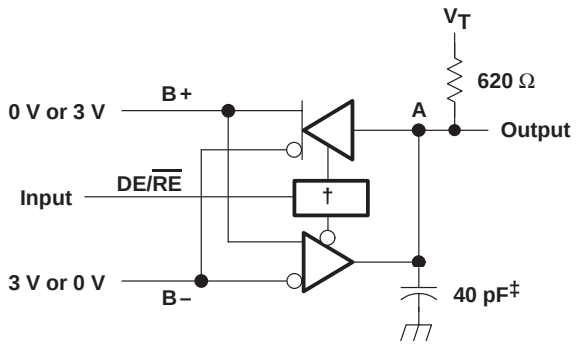

† CDE0 is high, CDE1, CDE2, BSR, and $\overline{CRE}$ are low and, for the SN75976A only, all others are open.

‡ Includes probe and jig capacitance.

Figure 7. Receiver Enable and Disable Time Test Circuit

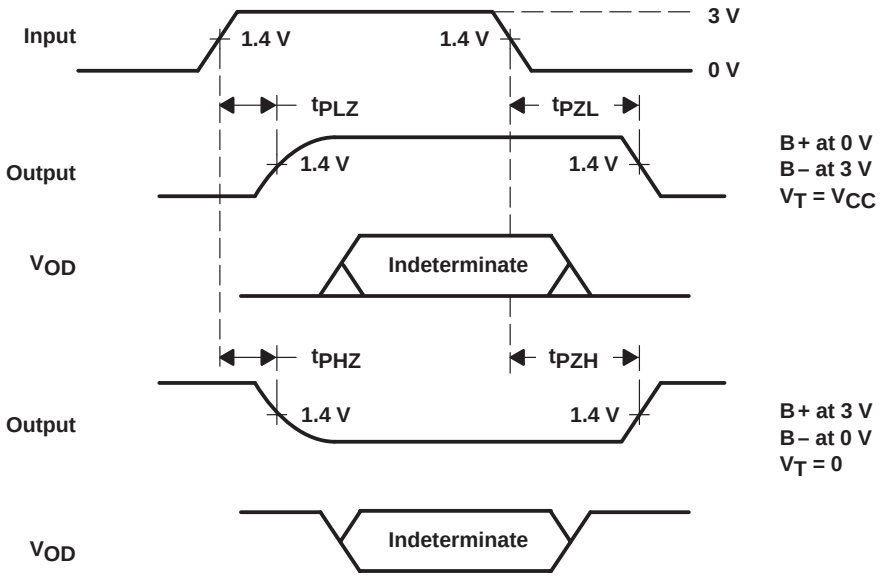

Figure 8. Receiver Enable and Disable Time Waveforms

NOTES: A. All input pulses are supplied by a generator having the following characteristics: $t_r \le 6$ ns, $t_f \le 6$ ns, PRR ≤ 1 MHz, duty cycle = 50%, $Z_O = 50\ \Omega$.
B. All resistances are in Ω and ± 5%, unless otherwise indicated.
C. All capacitances are in pF and ± 10%, unless otherwise indicated.
D. All indicated voltages are ± 10 mV.

TYPICAL CHARACTERISTICS

AVERAGE SUPPLY CURRENT vs FREQUENCY

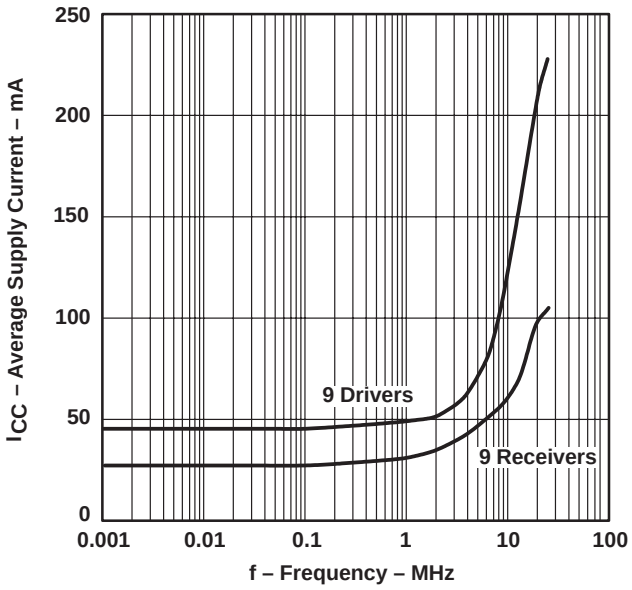

Figure 9

LOGIC INPUT CURRENT vs INPUT VOLTAGE

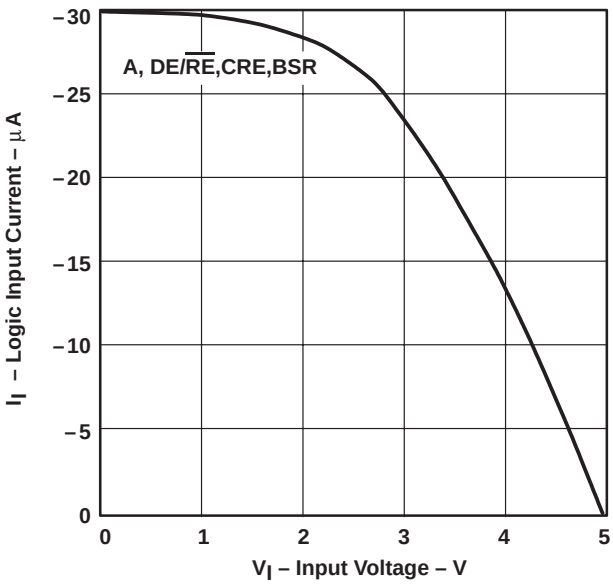

Figure 10

BUS INPUT CURRENT vs INPUT VOLTAGE

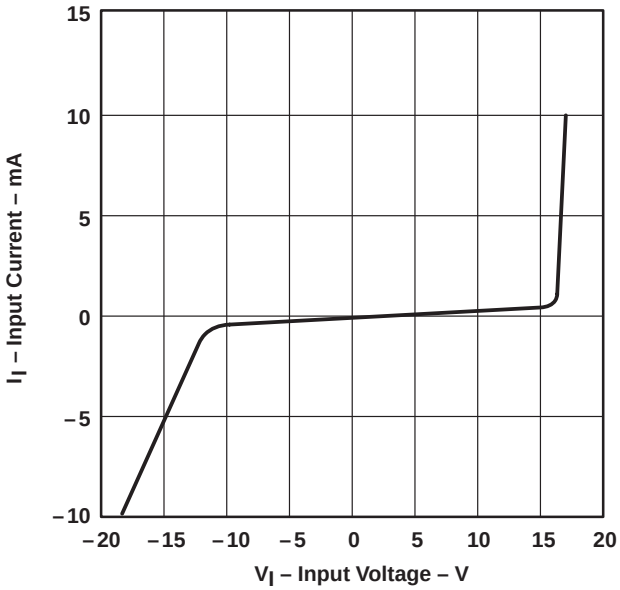

Figure 11

DRIVER LOW-LEVEL OUTPUT VOLTAGE vs LOW-LEVEL OUTPUT CURRENT

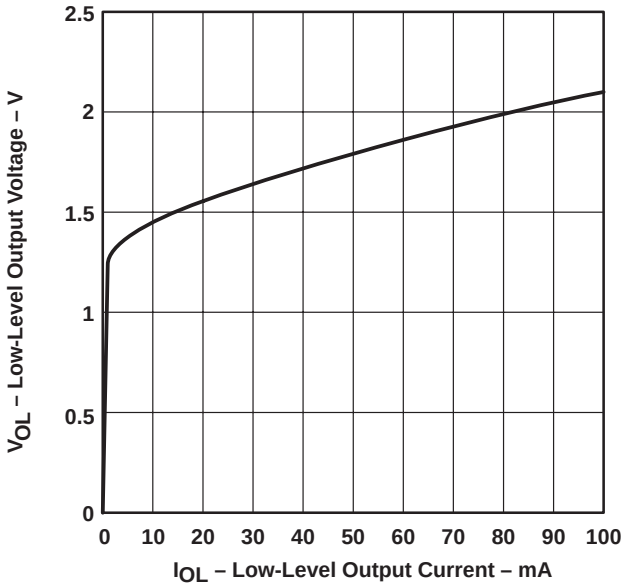

Figure 12

TYPICAL CHARACTERISTICS

DRIVER
HIGH-LEVEL OUTPUT VOLTAGE
vs
HIGH-LEVEL OUTPUT CURRENT

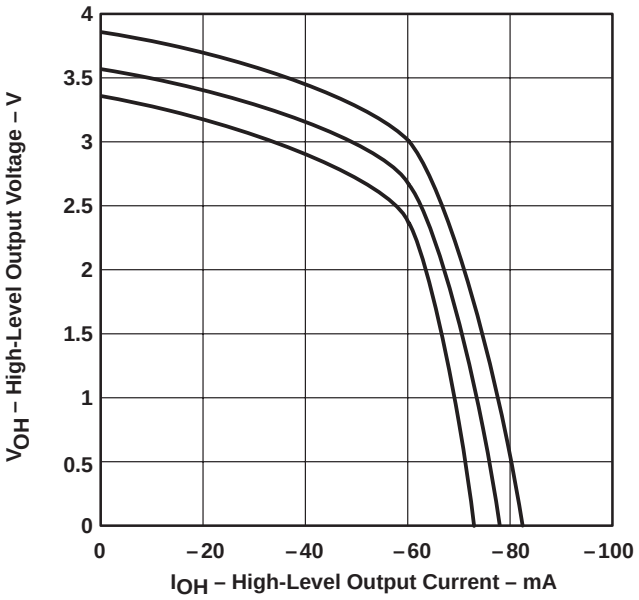

Figure 13

DRIVER
AVERAGE DIFFERENTIAL OUTPUT VOLTAGE
vs
AVERAGE CASE TEMPERATURE

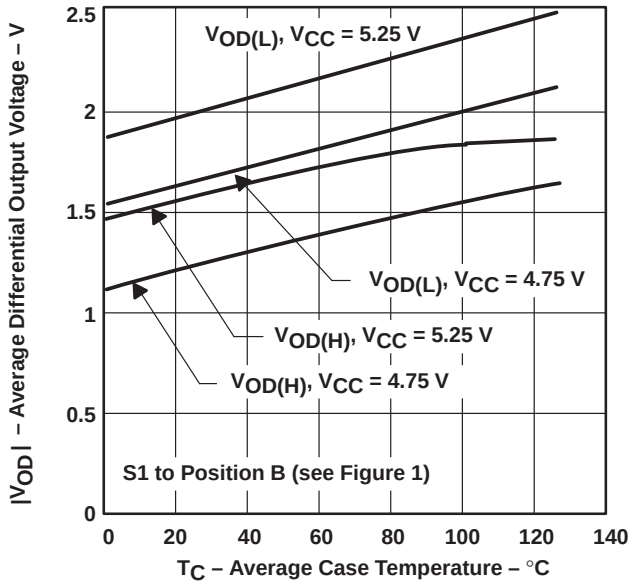

Figure 14

RECEIVER
PROPAGATION DELAY TIME
vs
CASE TEMPERATURE

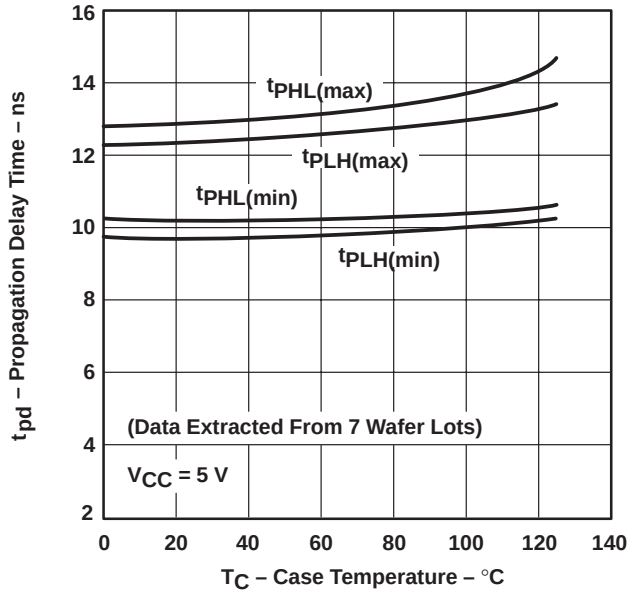

Figure 15

DRIVER
PROPAGATION DELAY TIME
vs
CASE TEMPERATURE

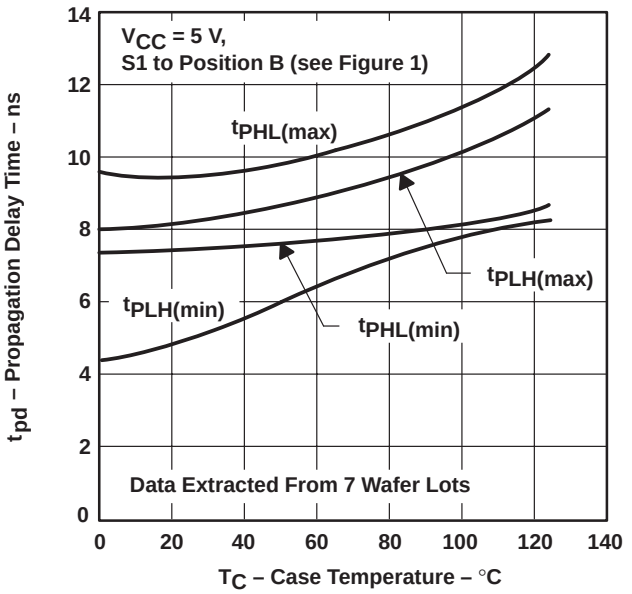

Figure 16

TYPICAL CHARACTERISTICS

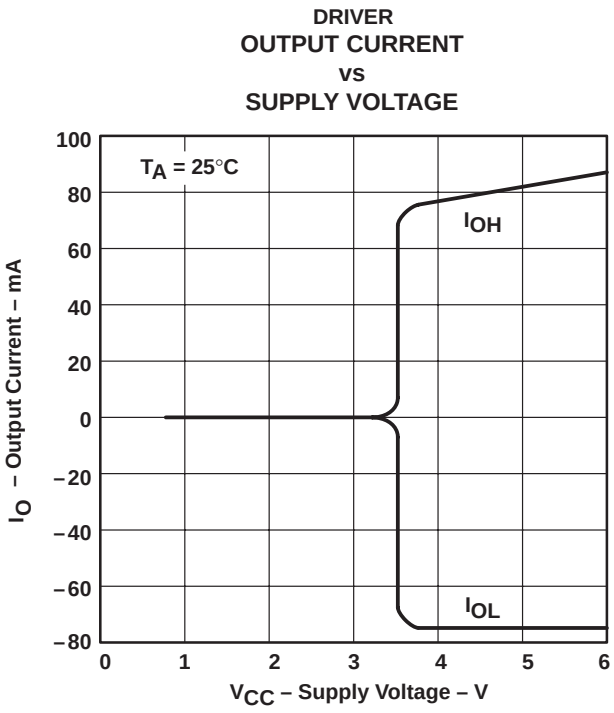

Figure 17

APPLICATION INFORMATION

Table 2. Typical Signal and Terminal Assignments

SIGNAL	TERMINAL	SCSI DATA	SCSI CONTROL	IPI DATA	IPI CONTROL
CDE0	54	DIFFSENSE	DIFFSENSE	V_{CC}	V_{CC}
CDE1	55	GND	GND	XMTA, XMTB	GND
CDE2	56	GND	GND	XMTA, XMTB	SLAVE/MASTER
BSR	2	GND	GND	GND, BSR	GND
$\overline{\text{CRE}}$	3	GND	GND	GND	V_{CC}
1A	4	DB0, DB8	ATN	AD7, BD7	NOT USED
1DE/$\overline{\text{RE}}$	5	DBE0, DBE8	INIT EN	GND	GND
2A	6	DB1, DB9	BSY	AD6, BD6	NOT USED
2DE/$\overline{\text{RE}}$	7	DBE1, DBE9	BSY EN	GND	GND
3A	8	DB2, DB10	ACK	AD5, BD5	SYNC IN
3DE/$\overline{\text{RE}}$	9	DBE2, DBE10	INIT EN	GND	GND
4A	10	DB3, DB11	RST	AD4, BD4	SLAVE IN
4DE/$\overline{\text{RE}}$	11	DBE3, DBE11	GND	GND	GND
5A	19	DB4, DB12	MSG	AD3, BD3	NOT USED
5DE/$\overline{\text{RE}}$	20	DBE4, DBE12	TARG EN	GND	GND
6A	21	DB5, DB13	SEL	AD2, BD2	SYNC OUT
6DE/$\overline{\text{RE}}$	22	DBE5, DBE13	SEL EN	GND	GND
7A	23	DB6, DB14	C/D	AD1, BD1	MASTER OUT
7DE/$\overline{\text{RE}}$	24	DBE6, DBE14	TARG EN	GND	GND
8A	25	DB7, DB15	REQ	AD0, BD0	SELECT OUT
8DE/$\overline{\text{RE}}$	26	DBE7, DBE15	TARG EN	GND	GND
9A	27	DBP0, DBP1	I/O	AP, BP	ATTENTION IN
9DE/$\overline{\text{RE}}$	28	DBPE0, DBPE1	TARG EN	XMTA, XMTB	V_{CC}

ABBREVIATIONS:

DBn = data bit n, where n = (0,1, . . . ,15)
DBEn = data bit n enable, where n = (0,1, . . . ,15)
DBP0 = parity bit for data bits 0 through 7 or IPI bus A
DBPE0 = parity bit enable for P0
DBP1 = parity bit for data bits 8 through 15 or IPI bus B
DBPE1 = parity bit enable for P1
ADn or BDn = IPI Bus A – Bit n (ADn) or Bus B – Bit n (BDn), where n = (0,1, . . . ,7)
AP or BP = IPI parity bit for bus A or bus B
XMTA or XMTB = transmit enable for IPI bus A or B
BSR = bit significant response
INIT EN = common enable for SCSI initiator mode
TARG EN = common enable for SCSI target mode

NOTE A: Signal inputs are shown as active high. When only active-low inputs are available, logic inversion is accomplished by reversing the B+ and B– connector terminal assignments.

APPLICATION INFORMATION

Function Tables

RECEIVER

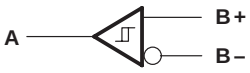

INPUTS		OUTPUT
B+†	B–†	A
L	H	L
H	L	H

DRIVER

INPUT	OUTPUTS	
A	B+	B–
L	L	H
H	H	L

TRANSCEIVER

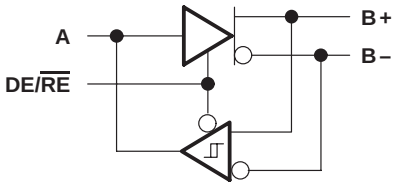

INPUTS				OUTPUTS		
DE/RE	A	B+†	B–†	A	B+	B–
L	–	L	H	L	–	–
L	–	H	L	H	–	–
H	L	–	–	–	L	H
H	H	–	–	–	H	L

DRIVER WITH ENABLE

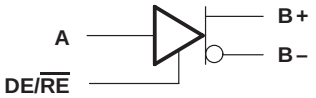

INPUTS		OUTPUTS	
DE/RE	A	B+	B–
L	L	Z	Z
L	H	Z	Z
H	L	L	H
H	H	H	L

WIRED-OR DRIVER

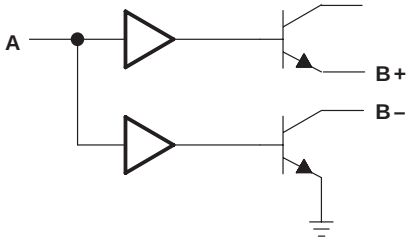

INPUT	OUTPUTS	
A	B+	B–
L	Z	Z
H	H	L

TWO-ENABLE INPUT DRIVER

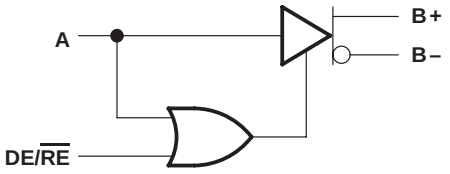

INPUTS		OUTPUTS	
DE/RE	A	B+	B–
L	L	Z	Z
L	H	H	L
H	L	L	H
H	H	H	L

H = high level, L = low level, X = irrelevant, Z = high impedance (off)

† An H in this column represents a voltage of 200 mV or higher than the other bus input. An L represents a voltage of 200 mV or lower than the other bus input. Any voltage less than 200 mV results in an indeterminate receiver output.

APPLICATION INFORMATION

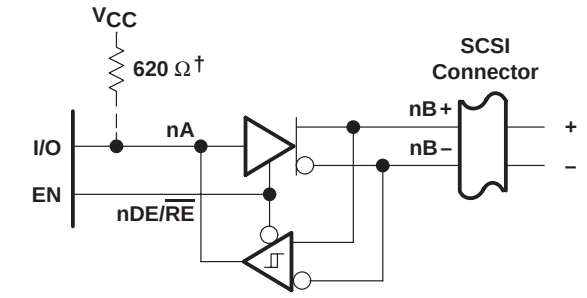

(a) ACTIVE-HIGH BIDIRECTIONAL I/O WITH SEPARATE ENABLE

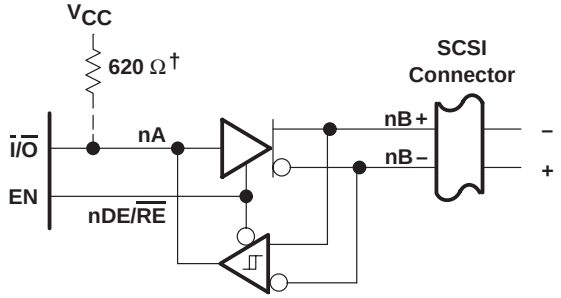

(b) ACTIVE-LOW BIDIRECTIONAL I/O WITH SEPARATE ENABLE

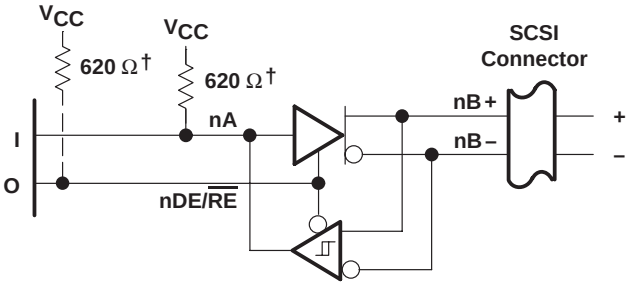

(c) WIRED-OR DRIVER AND ACTIVE-HIGH INPUT

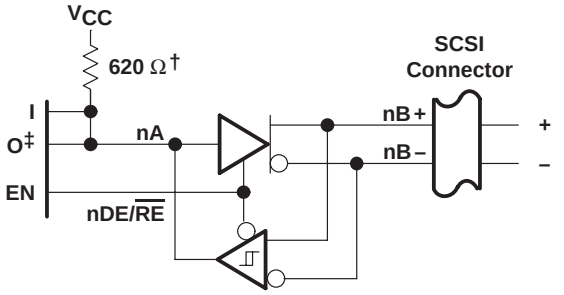

(d) SEPARATE ACTIVE-HIGH INPUT, OUTPUT, AND ENABLE

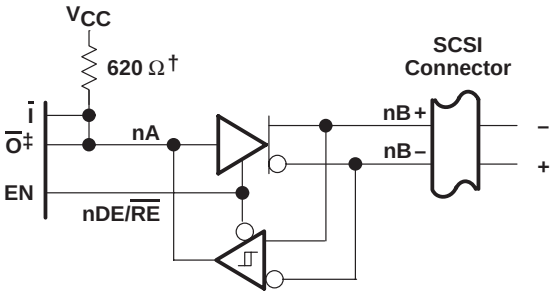

(e) SEPARATE ACTIVE-LOW INPUT AND OUTPUT AND ACTIVE-HIGH ENABLE

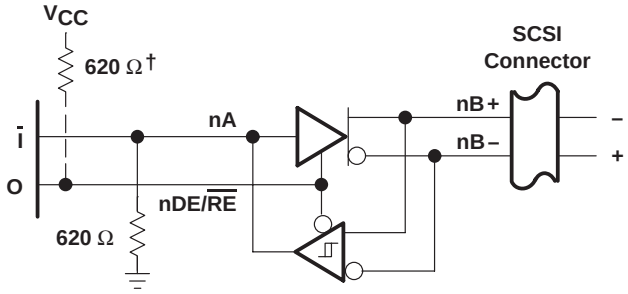

(f) WIRED-OR DRIVER AND ACTIVE-LOW INPUT

† When 0 is open drain
‡ Must be open-drain or 3-state output
NOTE A: The BSR, $\overline{\text{CRE}}$, A, and DE/$\overline{\text{RE}}$ inputs have internal pullup resistors. CDE0, CDE1, and CDE2 have internal pulldown resistors.

Figure 18. Typical SCSI Transceiver Connections

APPLICATION INFORMATION

channel logic configurations with control input logic

The following logic diagrams show the positive-logic representation for all combinations of control inputs. The control inputs are from MSB to LSB; the BSR, CDE0, CDE1, CDE2, and $\overline{\text{CRE}}$ bit values are shown below the diagrams. Channel 1 is at the top of the logic diagrams; channel 9 is at the bottom of the logic diagrams.

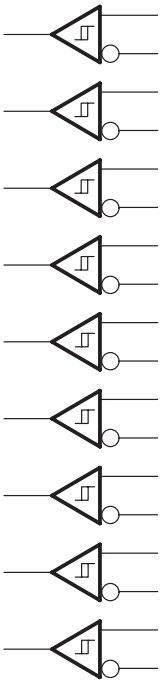

Figure 19. 00000

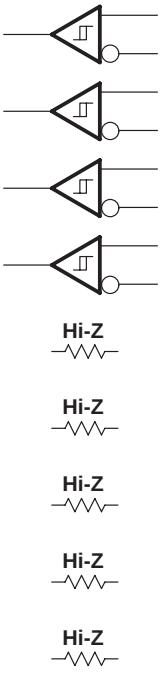

Figure 20. 00001

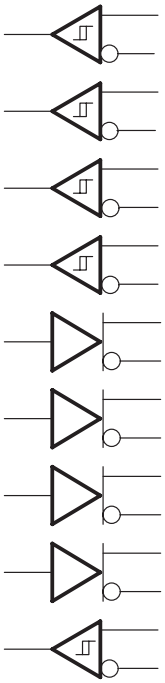

Figure 21. 00010

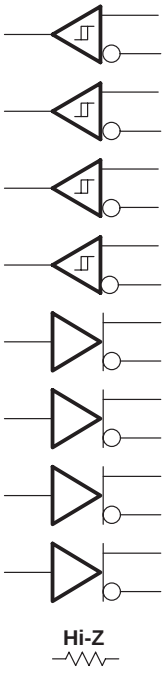

Figure 22. 00011

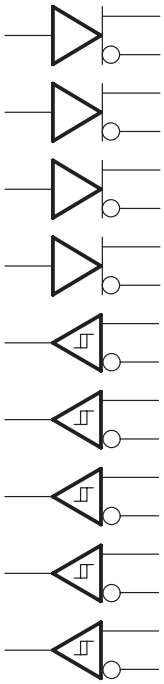

Figure 23. 00100

APPLICATION INFORMATION

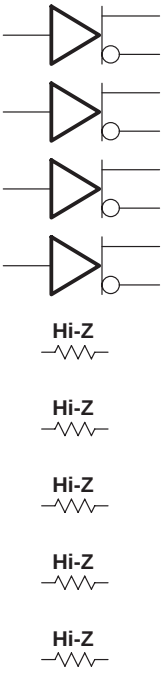

Figure 24. 00101

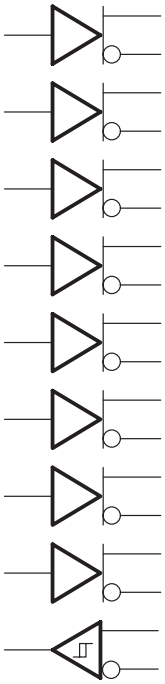

Figure 25. 00110

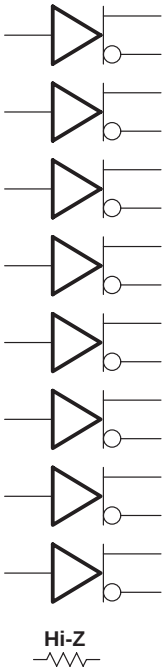

Figure 26. 00111

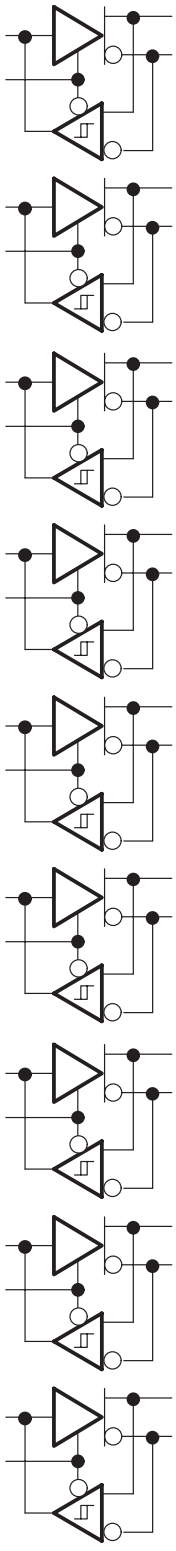

Figure 27. 01000

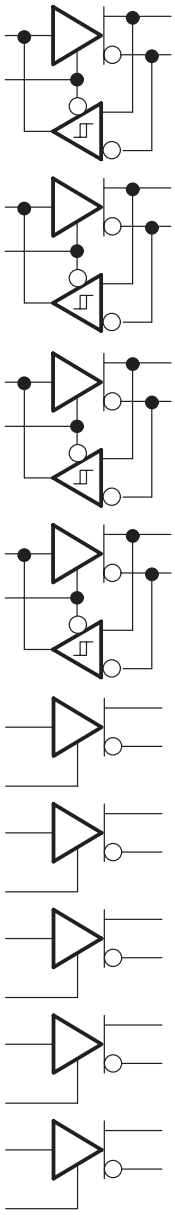

Figure 28. 01001

APPLICATION INFORMATION

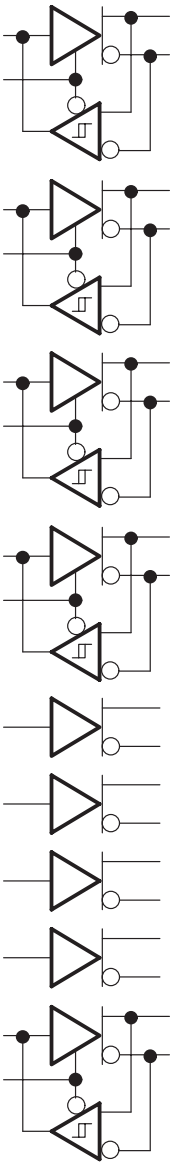

Figure 29. 01010

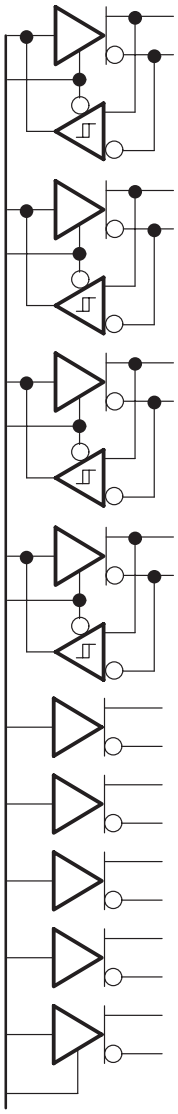

Figure 30. 01011

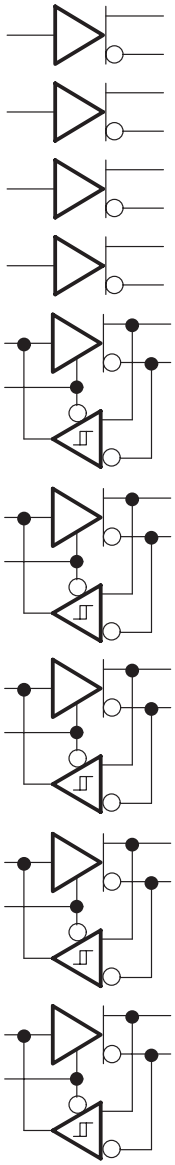

Figure 31. 01100

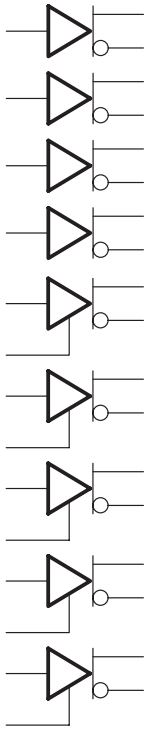

Figure 32. 01101

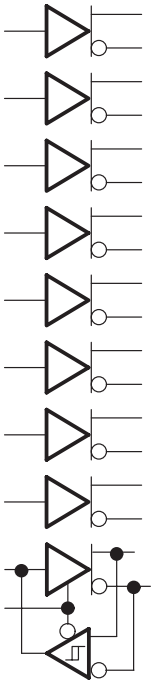

Figure 33. 01110

APPLICATION INFORMATION

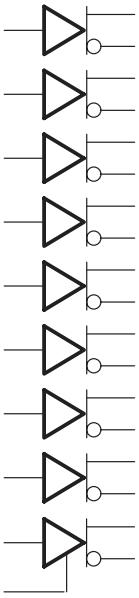

Figure 34. 01111

Figure 35. 10000 and 10001

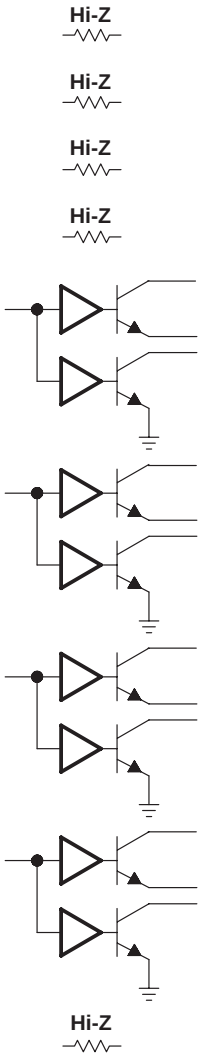

Figure 36. 10010 and 10011

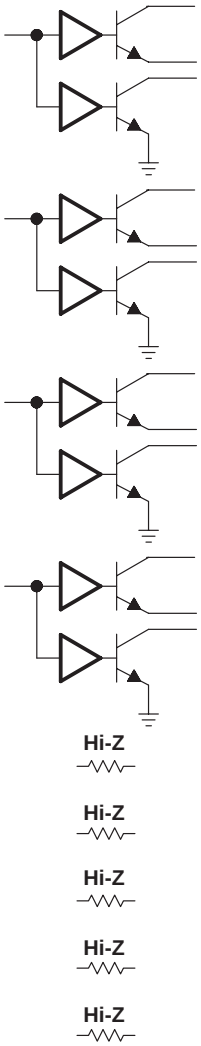

Figure 37. 10100 and 10101

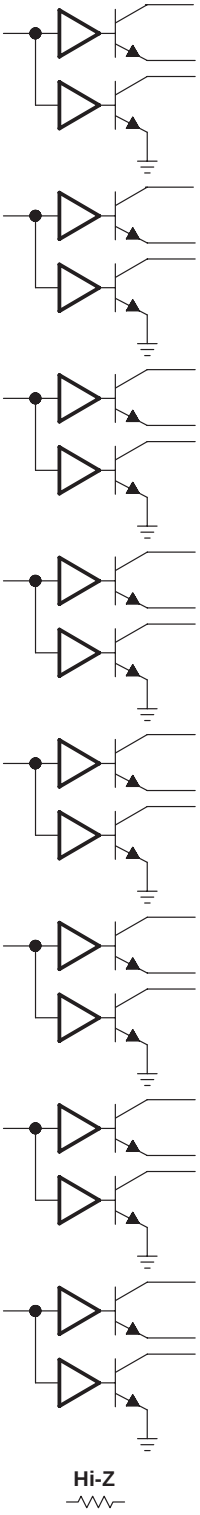

Figure 38. 10110 and 10111

APPLICATION INFORMATION

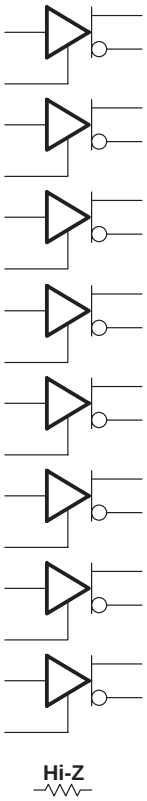

Figure 39. 11000 and 11001

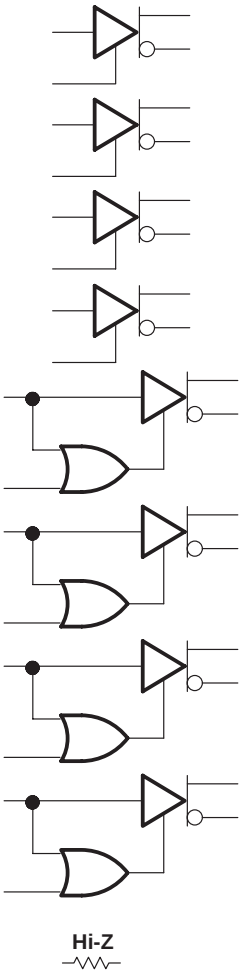

Figure 40. 11010 and 11011

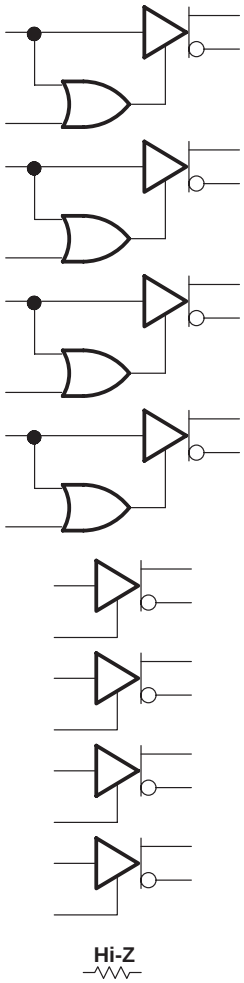

Figure 41. 11100 and 11101

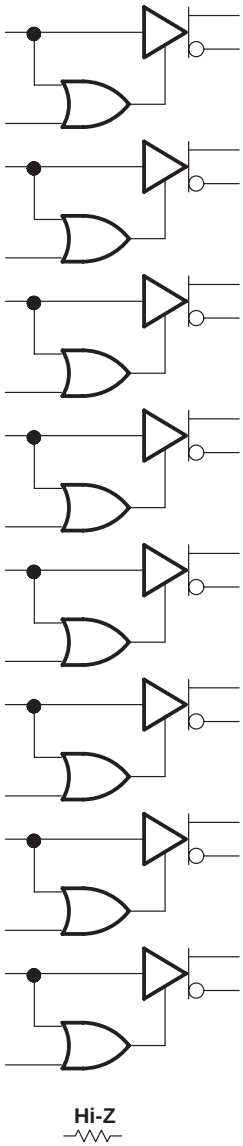

Figure 42. 11110 and 11111

MECHANICAL INFORMATION

DGG (R-PDSO-G)** **PLASTIC SMALL-OUTLINE PACKAGE**

48 PIN SHOWN

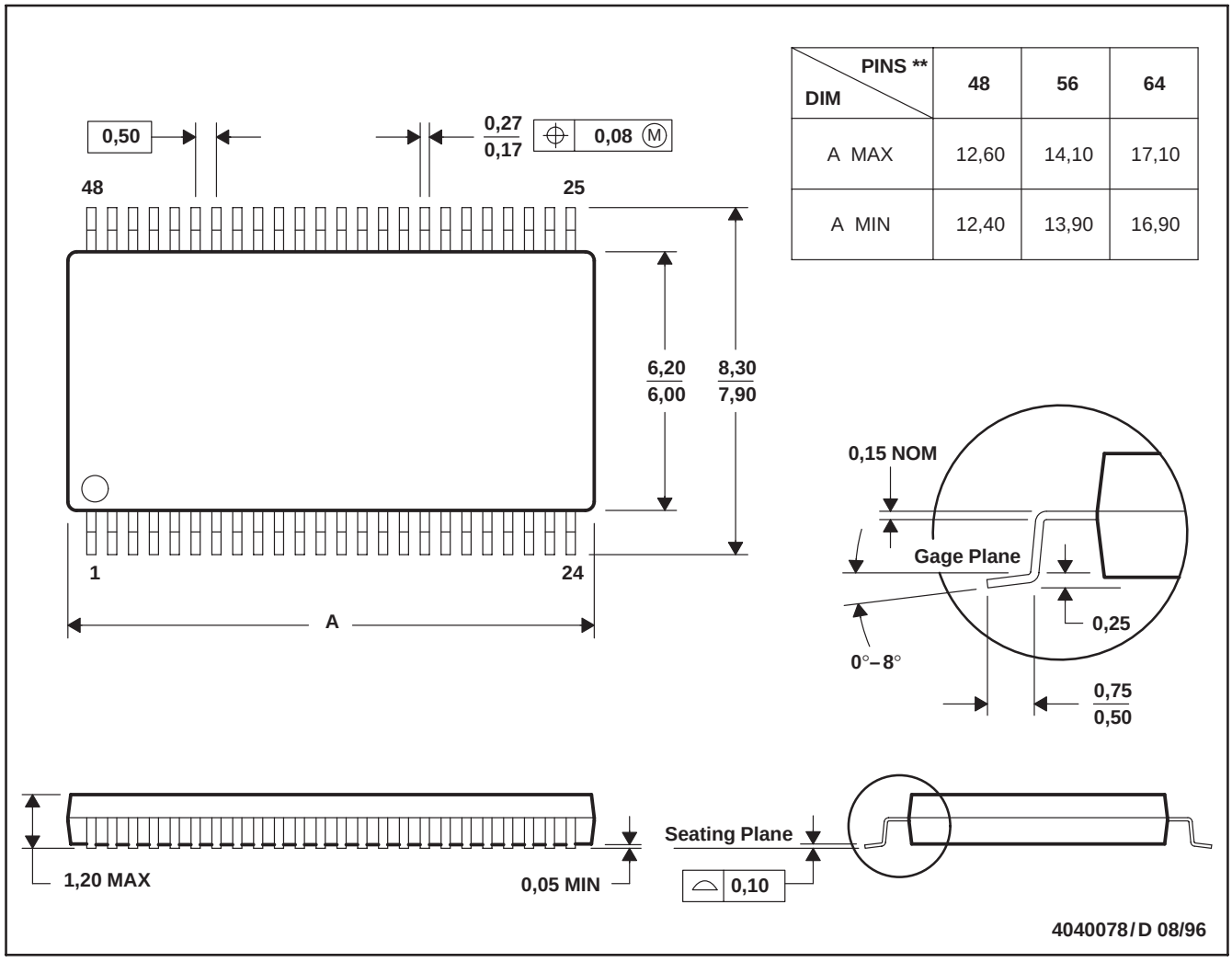

DIM \ PINS **	48	56	64
A MAX	12,60	14,10	17,10
A MIN	12,40	13,90	16,90

NOTES: B. All linear dimensions are in millimeters.
C. This drawing is subject to change without notice.
D. Falls within JEDEC MO-153

MECHANICAL INFORMATION

DL (R-PDSO-G)** **PLASTIC SMALL-OUTLINE PACKAGE**

48 PIN SHOWN

DIM \ PINS **	28	48	56
A MAX	0.380 (9,65)	0.630 (16,00)	0.730 (18,54)
A MIN	0.370 (9,40)	0.620 (15,75)	0.720 (18,29)

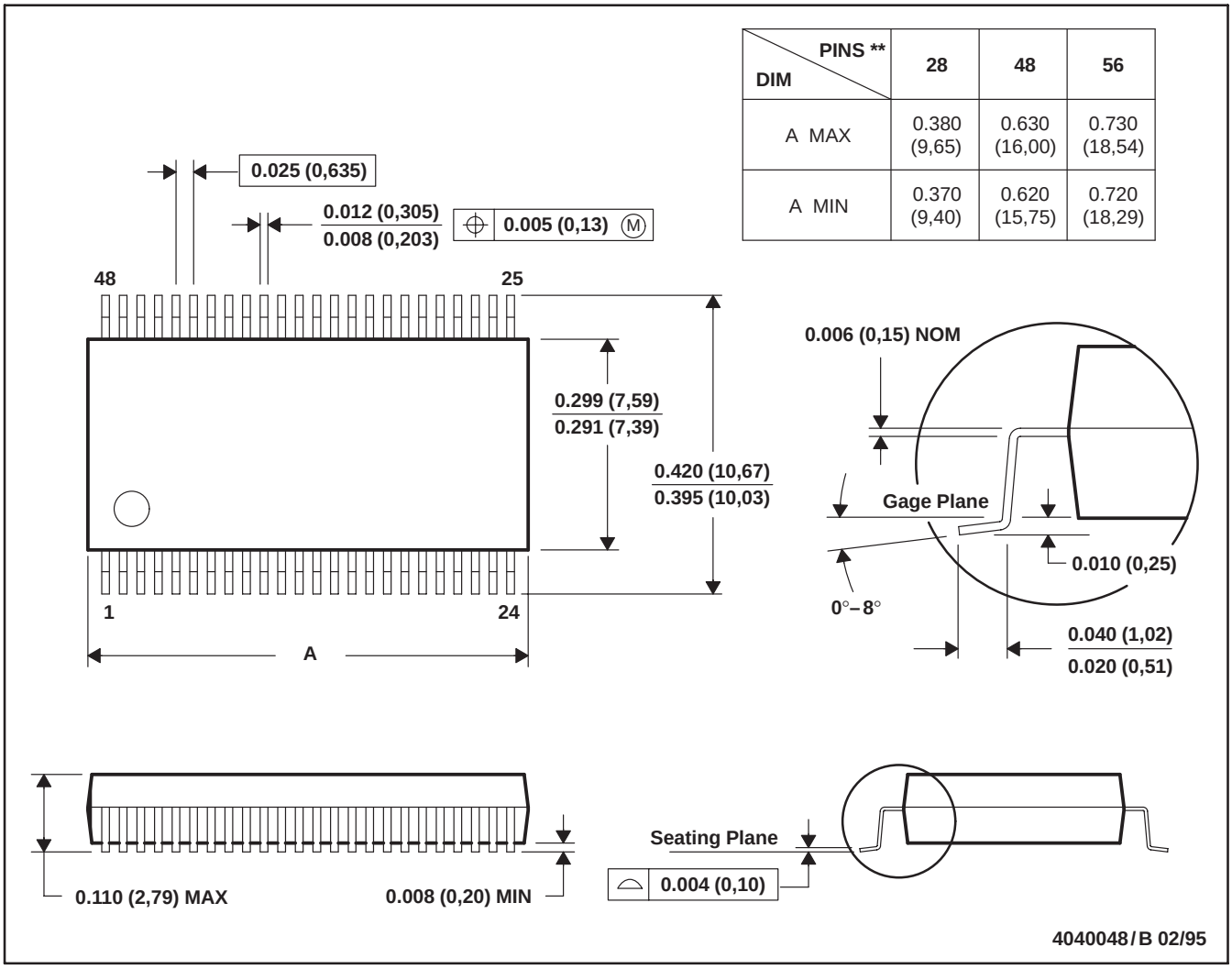

NOTES: A. All linear dimensions are in inches (millimeters).
B. This drawing is subject to change without notice.
C. Body dimensions do not include mold flash or protrusion not to exceed 0.006 (0,15).

MECHANICAL INFORMATION

WD (R-GDFP-F)** **CERAMIC DUAL FLATPACK**

48 PIN SHOWN

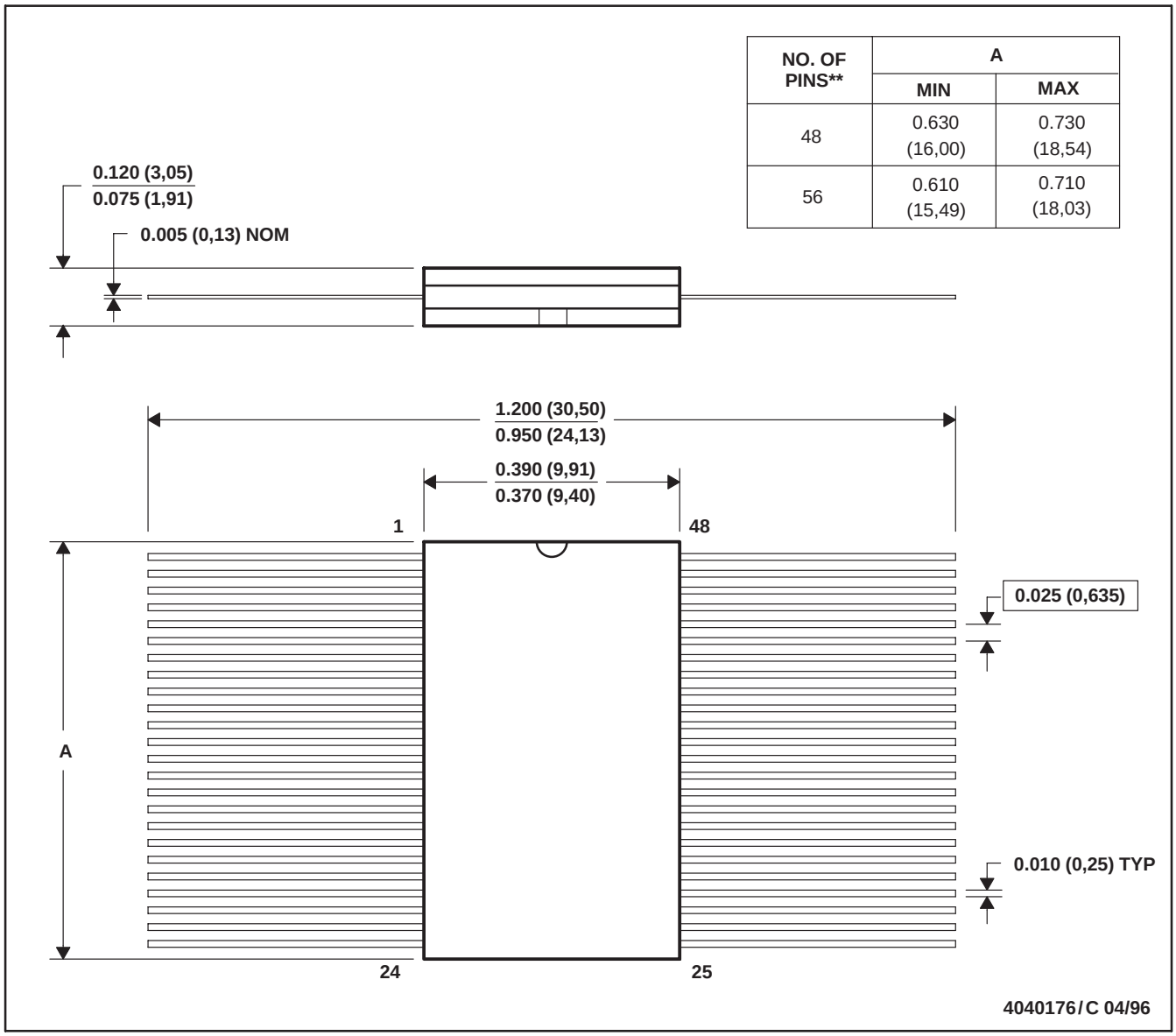

NOTES: A. All linear dimensions are in inches (millimeters).
B. This drawing is subject to change without notice.
C. This package can be hermetically sealed with a ceramic lid using glass frit.
D. Index point is provided on cap for pin identification only
E. Falls within MIL-STD-1835: GDFP1-F48 and JEDEC MO-146AA
GDFP1-F56 and JEDEC MO-146AB

PACKAGING INFORMATION

Orderable Device	Status (1)	Package Type	Package Drawing	Pins	Package Qty	Eco Plan (2)	Lead/Ball Finish	MSL Peak Temp (3)	Op Temp (°C)	Top-Side Markings (4)	Samples
5962-9689301QXA	ACTIVE	CFP	WD	56	1	TBD	Call TI	Call TI	-55 to 125	5962-9689301QX A SNJ55976A1WD	Samples
SN55976A1WD	ACTIVE	CFP	WD	56	1	TBD	A42	N / A for Pkg Type	-55 to 125	SN55976A1WD	Samples
SN75976A1DGG	ACTIVE	TSSOP	DGG	56	35	Green (RoHS & no Sb/Br)	CU NIPDAU	Level-2-260C-1 YEAR		SN75976A1	Samples
SN75976A1DGGG4	ACTIVE	TSSOP	DGG	56	35	Green (RoHS & no Sb/Br)	CU NIPDAU	Level-2-260C-1 YEAR		SN75976A1	Samples
SN75976A1DGGR	ACTIVE	TSSOP	DGG	56	2000	Green (RoHS & no Sb/Br)	CU NIPDAU	Level-2-260C-1 YEAR	0 to 70	SN75976A1	Samples
SN75976A1DGGRG4	ACTIVE	TSSOP	DGG	56	2000	Green (RoHS & no Sb/Br)	CU NIPDAU	Level-2-260C-1 YEAR	0 to 70	SN75976A1	Samples
SN75976A1DL	ACTIVE	SSOP	DL	56	20	Green (RoHS & no Sb/Br)	CU NIPDAU	Level-2-260C-1 YEAR		SN75976A1	Samples
SN75976A1DLG4	ACTIVE	SSOP	DL	56	20	Green (RoHS & no Sb/Br)	CU NIPDAU	Level-2-260C-1 YEAR		SN75976A1	Samples
SN75976A1DLR	ACTIVE	SSOP	DL	56	1000	Green (RoHS & no Sb/Br)	CU NIPDAU	Level-2-260C-1 YEAR		SN75976A1	Samples
SN75976A1DLRG4	ACTIVE	SSOP	DL	56	1000	Green (RoHS & no Sb/Br)	CU NIPDAU	Level-2-260C-1 YEAR		SN75976A1	Samples
SN75976A2DGG	ACTIVE	TSSOP	DGG	56	35	Green (RoHS & no Sb/Br)	CU NIPDAU	Level-2-260C-1 YEAR	0 to 70	SN75976A2	Samples
SN75976A2DGGG4	ACTIVE	TSSOP	DGG	56	35	Green (RoHS & no Sb/Br)	CU NIPDAU	Level-2-260C-1 YEAR	0 to 70	SN75976A2	Samples
SN75976A2DGGR	ACTIVE	TSSOP	DGG	56	2000	Green (RoHS & no Sb/Br)	CU NIPDAU	Level-2-260C-1 YEAR		SN75976A2	Samples
SN75976A2DGGRG4	ACTIVE	TSSOP	DGG	56	2000	Green (RoHS & no Sb/Br)	CU NIPDAU	Level-2-260C-1 YEAR		SN75976A2	Samples
SN75976A2DL	ACTIVE	SSOP	DL	56	20	Green (RoHS & no Sb/Br)	CU NIPDAU	Level-2-260C-1 YEAR		SN75976A2	Samples
SN75976A2DLG4	ACTIVE	SSOP	DL	56	20	Green (RoHS & no Sb/Br)	CU NIPDAU	Level-2-260C-1 YEAR		SN75976A2	Samples
SN75976A2DLR	ACTIVE	SSOP	DL	56	1000	Green (RoHS & no Sb/Br)	CU NIPDAU	Level-2-260C-1 YEAR		SN75976A2	Samples

Orderable Device	Status (1)	Package Type	Package Drawing	Pins	Package Qty	Eco Plan (2)	Lead/Ball Finish	MSL Peak Temp (3)	Op Temp (°C)	Top-Side Markings (4)	Samples
SN75976A2DLRG4	ACTIVE	SSOP	DL	56	1000	Green (RoHS & no Sb/Br)	CU NIPDAU	Level-2-260C-1 YEAR		SN75976A2	Samples
SNJ55976A1WD	ACTIVE	CFP	WD	56	1	TBD	A42	N / A for Pkg Type	-55 to 125	5962-9689301QX A SNJ55976A1WD	Samples

(1) The marketing status values are defined as follows:
ACTIVE: Product device recommended for new designs.
LIFEBUY: TI has announced that the device will be discontinued, and a lifetime-buy period is in effect.
NRND: Not recommended for new designs. Device is in production to support existing customers, but TI does not recommend using this part in a new design.
PREVIEW: Device has been announced but is not in production. Samples may or may not be available.
OBSOLETE: TI has discontinued the production of the device.

(2) Eco Plan - The planned eco-friendly classification: Pb-Free (RoHS), Pb-Free (RoHS Exempt), or Green (RoHS & no Sb/Br) - please check http://www.ti.com/productcontent for the latest availability information and additional product content details.
TBD: The Pb-Free/Green conversion plan has not been defined.
Pb-Free (RoHS): TI's terms "Lead-Free" or "Pb-Free" mean semiconductor products that are compatible with the current RoHS requirements for all 6 substances, including the requirement that lead not exceed 0.1% by weight in homogeneous materials. Where designed to be soldered at high temperatures, TI Pb-Free products are suitable for use in specified lead-free processes.
Pb-Free (RoHS Exempt): This component has a RoHS exemption for either 1) lead-based flip-chip solder bumps used between the die and package, or 2) lead-based die adhesive used between the die and leadframe. The component is otherwise considered Pb-Free (RoHS compatible) as defined above.
Green (RoHS & no Sb/Br): TI defines "Green" to mean Pb-Free (RoHS compatible), and free of Bromine (Br) and Antimony (Sb) based flame retardants (Br or Sb do not exceed 0.1% by weight in homogeneous material)

(3) MSL, Peak Temp. -- The Moisture Sensitivity Level rating according to the JEDEC industry standard classifications, and peak solder temperature.

(4) Multiple Top-Side Markings will be inside parentheses. Only one Top-Side Marking contained in parentheses and separated by a "~" will appear on a device. If a line is indented then it is a continuation of the previous line and the two combined represent the entire Top-Side Marking for that device.

Important Information and Disclaimer: The information provided on this page represents TI's knowledge and belief as of the date that it is provided. TI bases its knowledge and belief on information provided by third parties, and makes no representation or warranty as to the accuracy of such information. Efforts are underway to better integrate information from third parties. TI has taken and continues to take reasonable steps to provide representative and accurate information but may not have conducted destructive testing or chemical analysis on incoming materials and chemicals. TI and TI suppliers consider certain information to be proprietary, and thus CAS numbers and other limited information may not be available for release.

In no event shall TI's liability arising out of such information exceed the total purchase price of the TI part(s) at issue in this document sold by TI to Customer on an annual basis.

OTHER QUALIFIED VERSIONS OF SN55976A, SN75976A :

- Catalog: SN75976A

- Enhanced Product: SN75976A-EP, SN75976A-EP
- Military: SN55976A

NOTE: Qualified Version Definitions:

- Catalog - TI's standard catalog product
- Enhanced Product - Supports Defense, Aerospace and Medical Applications
- Military - QML certified for Military and Defense Applications

TAPE AND REEL INFORMATION

REEL DIMENSIONS

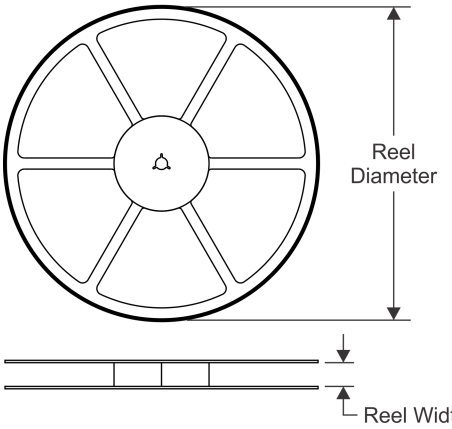

TAPE DIMENSIONS

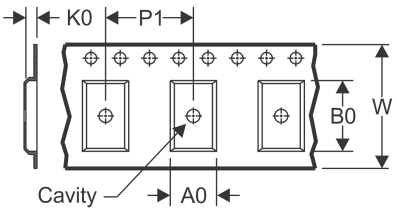

A0	Dimension designed to accommodate the component width
B0	Dimension designed to accommodate the component length
K0	Dimension designed to accommodate the component thickness
W	Overall width of the carrier tape
P1	Pitch between successive cavity centers

QUADRANT ASSIGNMENTS FOR PIN 1 ORIENTATION IN TAPE

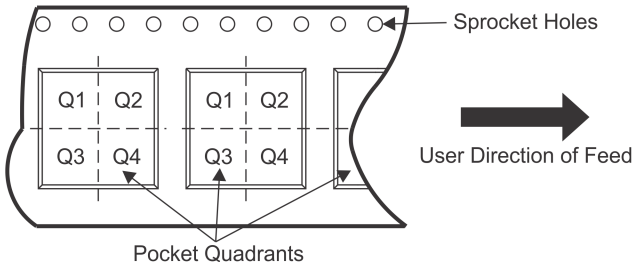

*All dimensions are nominal

Device	Package Type	Package Drawing	Pins	SPQ	Reel Diameter (mm)	Reel Width W1 (mm)	A0 (mm)	B0 (mm)	K0 (mm)	P1 (mm)	W (mm)	Pin1 Quadrant
SN75976A1DGGR	TSSOP	DGG	56	2000	330.0	24.4	8.6	15.6	1.8	12.0	24.0	Q1
SN75976A1DLR	SSOP	DL	56	1000	330.0	32.4	11.35	18.67	3.1	16.0	32.0	Q1
SN75976A2DGGR	TSSOP	DGG	56	2000	330.0	24.4	8.6	15.6	1.8	12.0	24.0	Q1
SN75976A2DLR	SSOP	DL	56	1000	330.0	32.4	11.35	18.67	3.1	16.0	32.0	Q1

TAPE AND REEL BOX DIMENSIONS

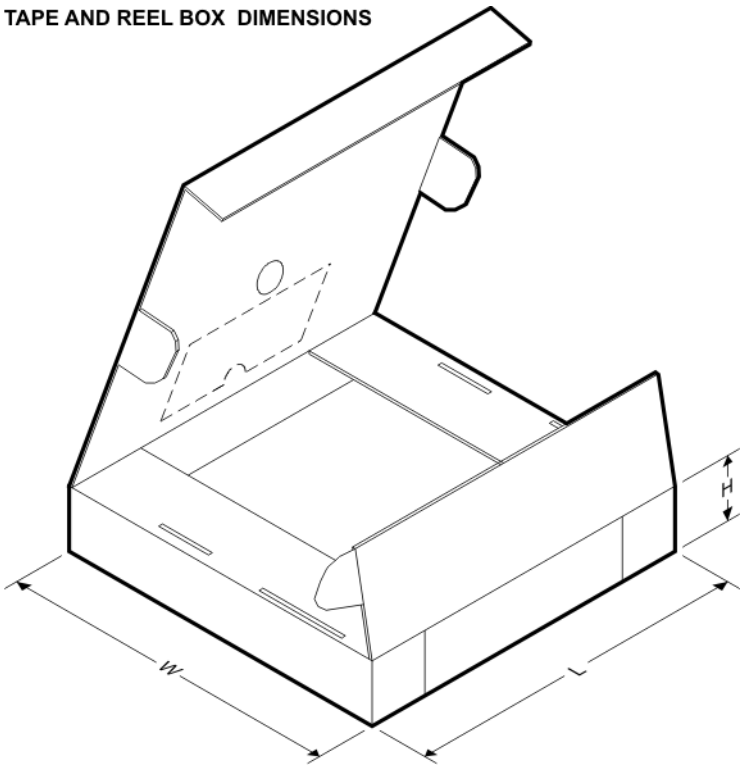

*All dimensions are nominal

Device	Package Type	Package Drawing	Pins	SPQ	Length (mm)	Width (mm)	Height (mm)
SN75976A1DGGR	TSSOP	DGG	56	2000	367.0	367.0	45.0
SN75976A1DLR	SSOP	DL	56	1000	367.0	367.0	55.0
SN75976A2DGGR	TSSOP	DGG	56	2000	367.0	367.0	45.0
SN75976A2DLR	SSOP	DL	56	1000	367.0	367.0	55.0

WD (R-GDFP-F)** **CERAMIC DUAL FLATPACK**

48 LEADS SHOWN

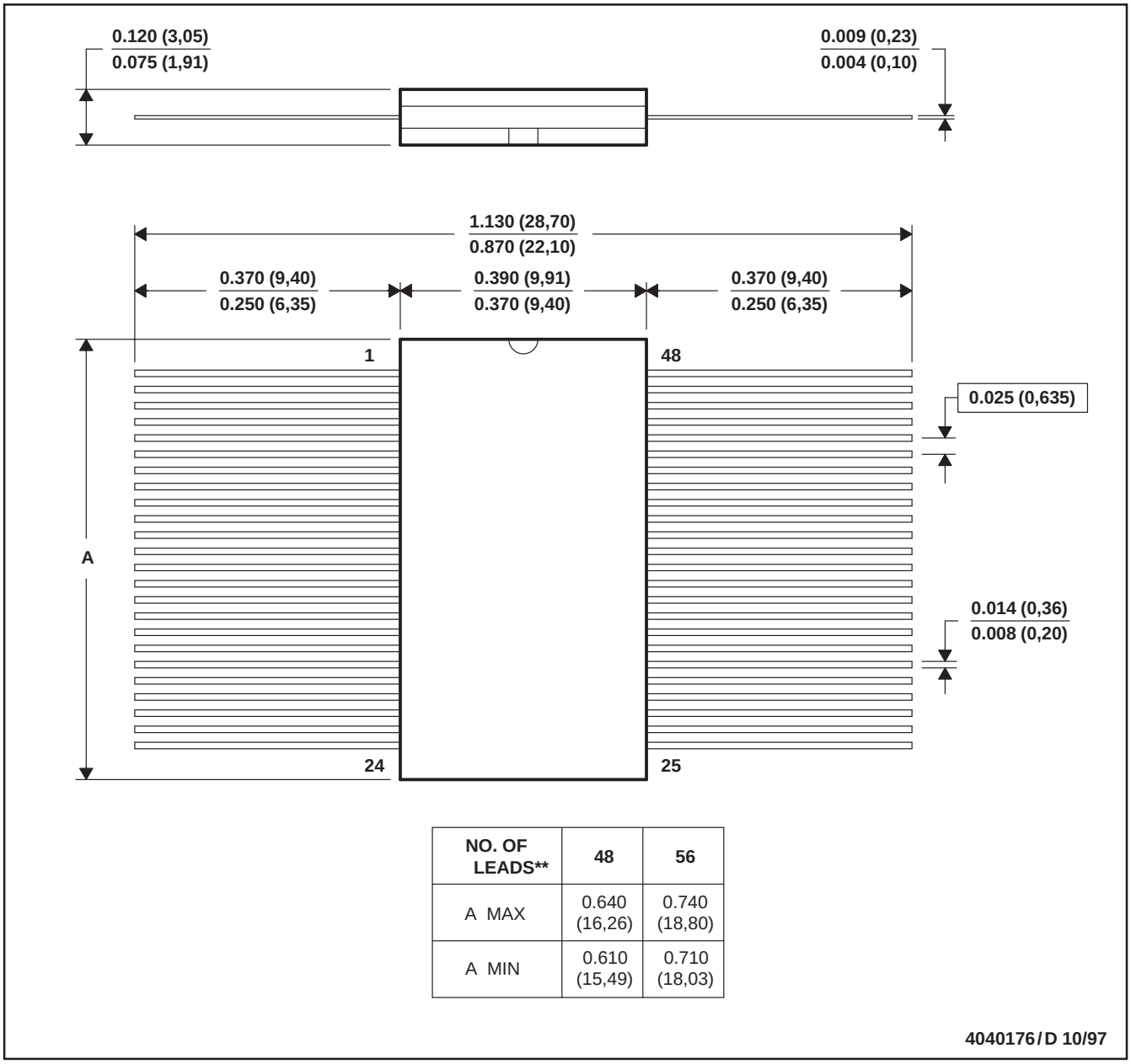

NO. OF LEADS**	48	56
A MAX	0.640 (16,26)	0.740 (18,80)
A MIN	0.610 (15,49)	0.710 (18,03)

4040176/D 10/97

NOTES: A. All linear dimensions are in inches (millimeters).
B. This drawing is subject to change without notice.
C. This package can be hermetically sealed with a ceramic lid using glass frit.
D. Index point is provided on cap for terminal identification only
E. Falls within MIL STD 1835: GDFP1-F48 and JEDEC MO-146AA
GDFP1-F56 and JEDEC MO-146AB

DL (R–PDSO–G56) PLASTIC SMALL–OUTLINE PACKAGE

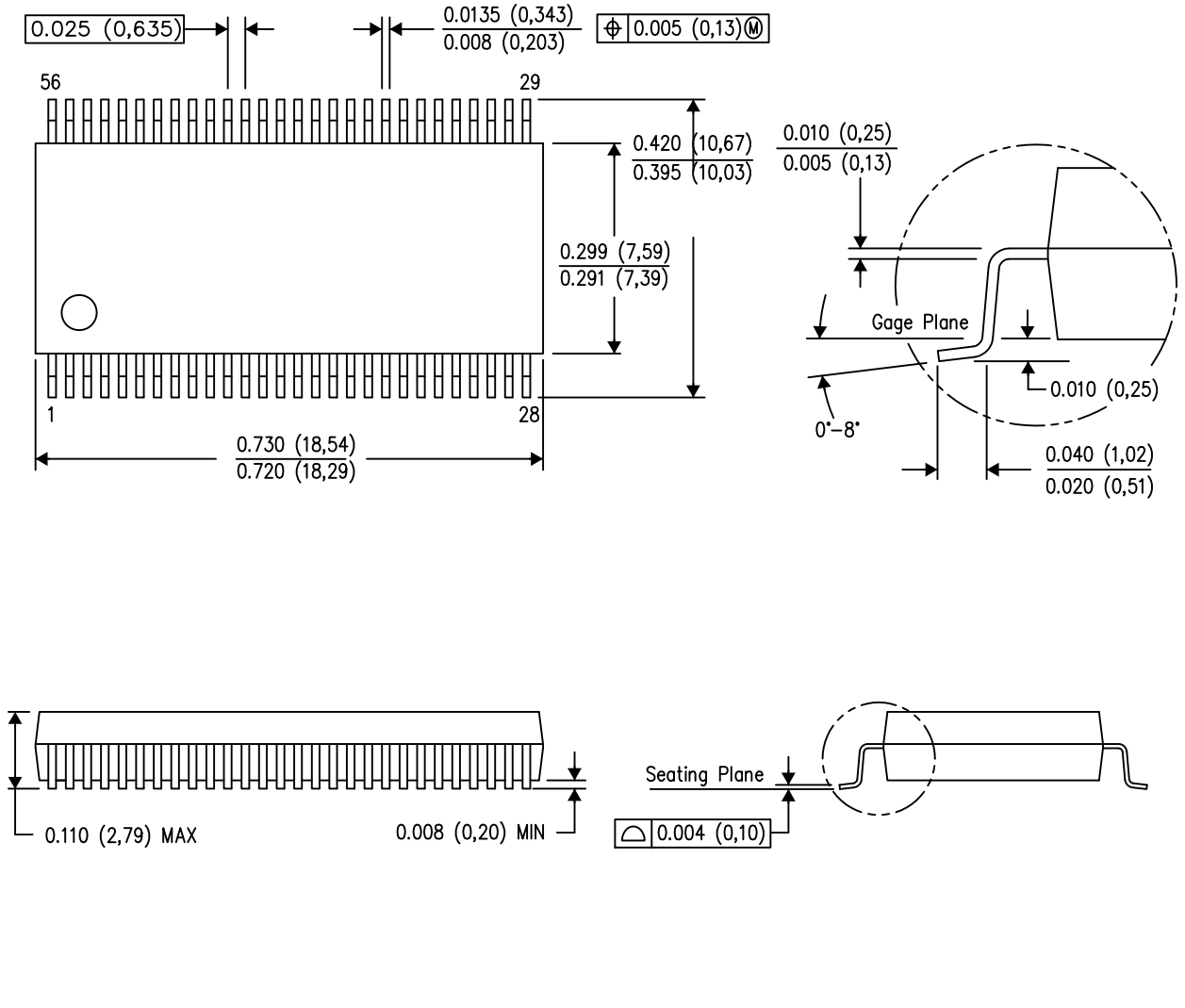

NOTES:
A. All linear dimensions are in inches (millimeters).
B. This drawing is subject to change without notice.
C. Body dimensions do not include mold flash or protrusion not to exceed 0.006 (0,15).
D. Falls within JEDEC MO–118

PowerPAD is a trademark of Texas Instruments.

DGG (R-PDSO-G)** **PLASTIC SMALL-OUTLINE PACKAGE**

48 PINS SHOWN

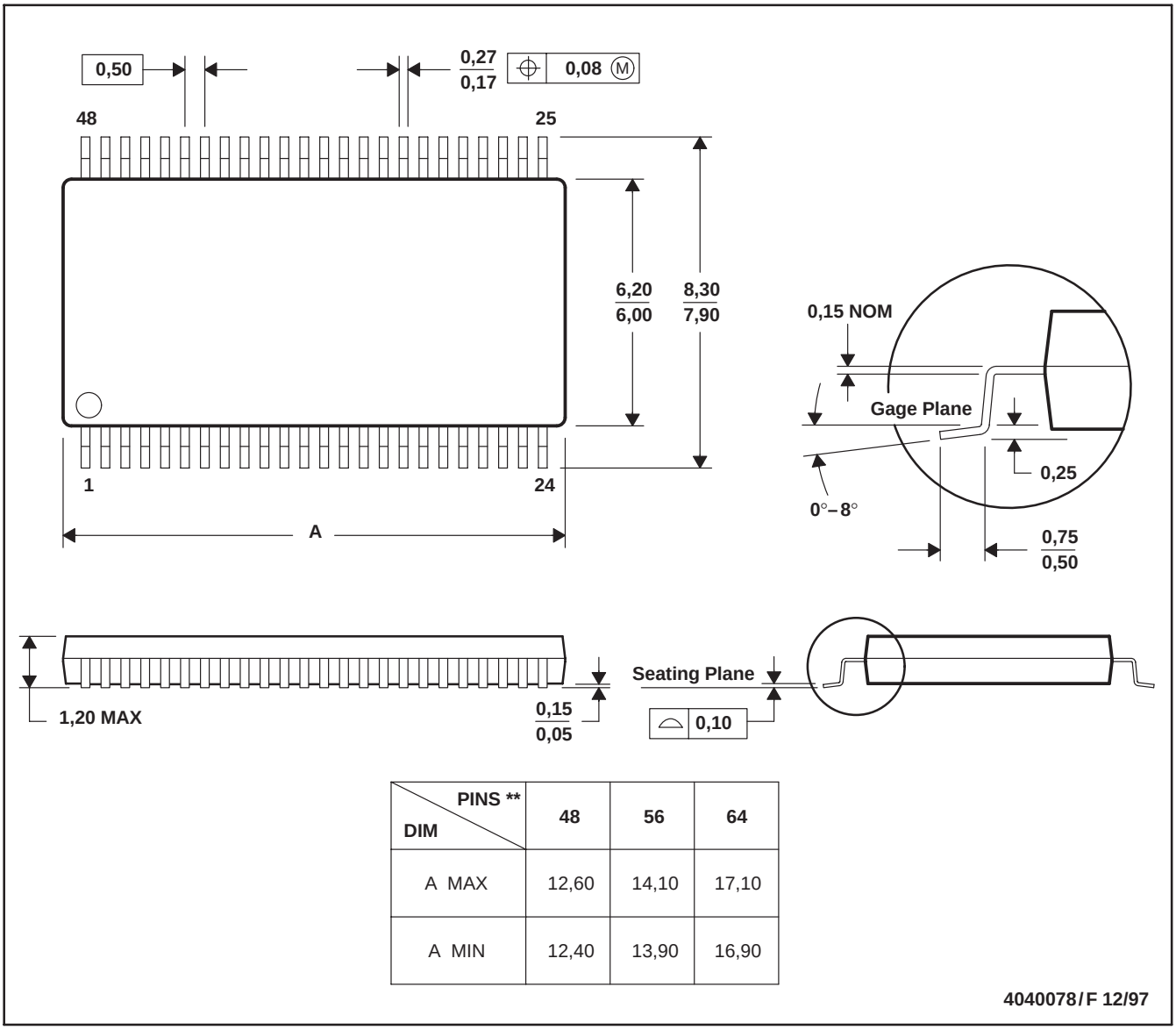

DIM \ PINS **	48	56	64
A MAX	12,60	14,10	17,10
A MIN	12,40	13,90	16,90

NOTES: A. All linear dimensions are in millimeters.
B. This drawing is subject to change without notice.
C. Body dimensions do not include mold protrusion not to exceed 0,15.
D. Falls within JEDEC MO-153

IMPORTANT NOTICE

Texas Instruments Incorporated and its subsidiaries (TI) reserve the right to make corrections, enhancements, improvements and other changes to its semiconductor products and services per JESD46, latest issue, and to discontinue any product or service per JESD48, latest issue. Buyers should obtain the latest relevant information before placing orders and should verify that such information is current and complete. All semiconductor products (also referred to herein as “components”) are sold subject to TI’s terms and conditions of sale supplied at the time of order acknowledgment.

TI warrants performance of its components to the specifications applicable at the time of sale, in accordance with the warranty in TI’s terms and conditions of sale of semiconductor products. Testing and other quality control techniques are used to the extent TI deems necessary to support this warranty. Except where mandated by applicable law, testing of all parameters of each component is not necessarily performed.

TI assumes no liability for applications assistance or the design of Buyers’ products. Buyers are responsible for their products and applications using TI components. To minimize the risks associated with Buyers’ products and applications, Buyers should provide adequate design and operating safeguards.

TI does not warrant or represent that any license, either express or implied, is granted under any patent right, copyright, mask work right, or other intellectual property right relating to any combination, machine, or process in which TI components or services are used. Information published by TI regarding third-party products or services does not constitute a license to use such products or services or a warranty or endorsement thereof. Use of such information may require a license from a third party under the patents or other intellectual property of the third party, or a license from TI under the patents or other intellectual property of TI.

Reproduction of significant portions of TI information in TI data books or data sheets is permissible only if reproduction is without alteration and is accompanied by all associated warranties, conditions, limitations, and notices. TI is not responsible or liable for such altered documentation. Information of third parties may be subject to additional restrictions.

Resale of TI components or services with statements different from or beyond the parameters stated by TI for that component or service voids all express and any implied warranties for the associated TI component or service and is an unfair and deceptive business practice. TI is not responsible or liable for any such statements.

Buyer acknowledges and agrees that it is solely responsible for compliance with all legal, regulatory and safety-related requirements concerning its products, and any use of TI components in its applications, notwithstanding any applications-related information or support that may be provided by TI. Buyer represents and agrees that it has all the necessary expertise to create and implement safeguards which anticipate dangerous consequences of failures, monitor failures and their consequences, lessen the likelihood of failures that might cause harm and take appropriate remedial actions. Buyer will fully indemnify TI and its representatives against any damages arising out of the use of any TI components in safety-critical applications.

In some cases, TI components may be promoted specifically to facilitate safety-related applications. With such components, TI’s goal is to help enable customers to design and create their own end-product solutions that meet applicable functional safety standards and requirements. Nonetheless, such components are subject to these terms.

No TI components are authorized for use in FDA Class III (or similar life-critical medical equipment) unless authorized officers of the parties have executed a special agreement specifically governing such use.

Only those TI components which TI has specifically designated as military grade or “enhanced plastic” are designed and intended for use in military/aerospace applications or environments. Buyer acknowledges and agrees that any military or aerospace use of TI components which have ***not*** been so designated is solely at the Buyer's risk, and that Buyer is solely responsible for compliance with all legal and regulatory requirements in connection with such use.

TI has specifically designated certain components as meeting ISO/TS16949 requirements, mainly for automotive use. In any case of use of non-designated products, TI will not be responsible for any failure to meet ISO/TS16949.

Products		**Applications**	
Audio	www.ti.com/audio	Automotive and Transportation	www.ti.com/automotive
Amplifiers	amplifier.ti.com	Communications and Telecom	www.ti.com/communications
Data Converters	dataconverter.ti.com	Computers and Peripherals	www.ti.com/computers
DLP® Products	www.dlp.com	Consumer Electronics	www.ti.com/consumer-apps
DSP	dsp.ti.com	Energy and Lighting	www.ti.com/energy
Clocks and Timers	www.ti.com/clocks	Industrial	www.ti.com/industrial
Interface	interface.ti.com	Medical	www.ti.com/medical
Logic	logic.ti.com	Security	www.ti.com/security
Power Mgmt	power.ti.com	Space, Avionics and Defense	www.ti.com/space-avionics-defense
Microcontrollers	microcontroller.ti.com	Video and Imaging	www.ti.com/video
RFID	www.ti-rfid.com		
OMAP Applications Processors	www.ti.com/omap	**TI E2E Community**	e2e.ti.com
Wireless Connectivity	www.ti.com/wirelessconnectivity		

Mailing Address: Texas Instruments, Post Office Box 655303, Dallas, Texas 75265
Copyright © 2013, Texas Instruments Incorporated