- **A-Suffix Versions Offer 5-mV V_{IO}**
- **B-Suffix Versions Offer 2-mV V_{IO}**
- **Wide Range of Supply Voltages 1.4 V to 16 V**
- **True Single-Supply Operation**
- **Common-Mode Input Voltage Includes the Negative Rail**
- **Low Noise . . . 25 nV/√Hz Typ at f = 1 kHz (High-Bias Version)**

D, N, OR PW PACKAGE (TOP VIEW)

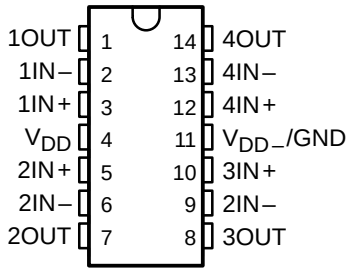

description

The TLC254, TLC254A, TLC254B, TLC25L4, TLC254L4A, TLC254L4B, TLC25M4, TLC25M4A and TL25M4B are low-cost, low-power quad operational amplifiers designed to operate with single or dual supplies. These devices utilize the Texas Instruments silicon gate LinCMOS™ process, giving them stable input-offset voltages that are available in selected grades of 2, 5, or 10 mV maximum, very high input impedances, and extremely low input offset and bias currents. Because the input common-mode range extends to the negative rail and the power consumption is extremely low, this series is ideally suited for battery-powered or energy-conserving applications. The series offers operation down to a 1.4-V supply, is stable at unity gain, and has excellent noise characteristics.

symbol (each amplifier)

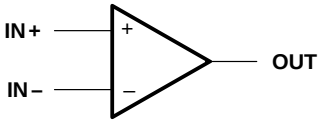

These devices have internal electrostatic-discharge (ESD) protection circuits that prevent catastrophic failures at voltages up to 2000 V as tested under MIL-STD-883C, Method 3015.1. However, care should be exercised in handling these devices as exposure to ESD may result in degradation of the device parametric performance.

Because of the extremely high input impedance and low input bias and offset currents, applications for these devices include many areas that have previously been limited to BIFET and NFET product types. Any circuit using high-impedance elements and requiring small offset errors is a good candidate for cost-effective use of these devices. Many features associated with bipolar technology are available with LinCMOS operational amplifiers without the power penalties of traditional bipolar devices.

Available options

T_A	V_{IO}max AT 25°C	PACKAGED DEVICES			CHIP FORM (Y)
		SMALL OUTLINE (D)	PLASTIC DIP (N)	TSSOP (PW)	
0°C to 70°C	10 mV	TLC254CD	TLC254CN	TLC254CPW	TLC254Y
	5 mV	TLC254ACD	TLC254ACN	—	—
	2 mV	TLC254BCD	TLC254BCN	—	—
	10 mV	TLC25L4CD	TLC25L4CN	TLC25L4CPW	TLC25L4Y
	5 mV	TLC25L4ACD	TLC25L4ACN	—	—
	2 mV	TLC25L2BCD	TLC25L4BCN	—	—
	10 mV	TLC25M4CD	TLC25M4CN	TLC25M4CPW	TLC25M4Y
	5 mV	TLC25M4ACD	TLC25M4ACN	—	—
	2 mV	TLC25M4BCD	TLC25M4BCN	—	—

The D package is available taped and reeled. Add the suffix R to the device type (e.g., TLC254CDR). Chips are tested at 25°C.

LinCMOS is a trademark of Texas Instruments.

PRODUCTION DATA information is current as of publication date. Products conform to specifications per the terms of Texas Instruments standard warranty. Production processing does not necessarily include testing of all parameters.

Copyright © 2001, Texas Instruments Incorporated

description (continued)

General applications such as transducer interfacing, analog calculations, amplifier blocks, active filters, and signal buffering are all easily designed with these devices. Remote and inaccessible equipment applications are possible using their low-voltage and low-power capabilities. These devices are well suited to solve the difficult problems associated with single-battery and solar-cell-powered applications. This series includes devices that are characterized for the commercial temperature range and are available in 14-pin plastic dip and the small-outline packages. The device is also available in chip form.

These devices are characterized for operation from 0°C to 70°C.

DEVICE FEATURES

PARAMETER	TLC25L4_C (LOW BIAS)	TLC25M4_C (MEDIUM BIAS)	TLC254_C (HIGH BIAS)
Supply current (Typ)	40 μA	600 μA	4000 μA
Slew rate (Typ)	0.04 V/μA	0.6 V/μA	4.5 V/μA
Input offset voltage (Max)			
TLC254C, TLC25L4C, TLC25M4C	10 mV	10 mV	10 mV
TLC254AC, TLC25L4AC, TLC25M4AC	5 mV	5 mV	5 mV
TLC254BC, TLC25L4BC, TLC25M4BC	2 mV	2 mV	2 mV
Offset voltage drift (Typ)	0.1 μV/month†	0.1 μV/month†	0.1 μV/month†
Offset voltage temperature coefficient (Typ)	0.7 μV/°C	2 μV/°C	5 μV/°C
Input bias current (Typ)	1 pA	1 pA	1 pA
Input offset current (Typ)	1 pA	1 pA	1 pA

† The long-term drift value applies after the first month.

equivalent schematic (each amplifier)

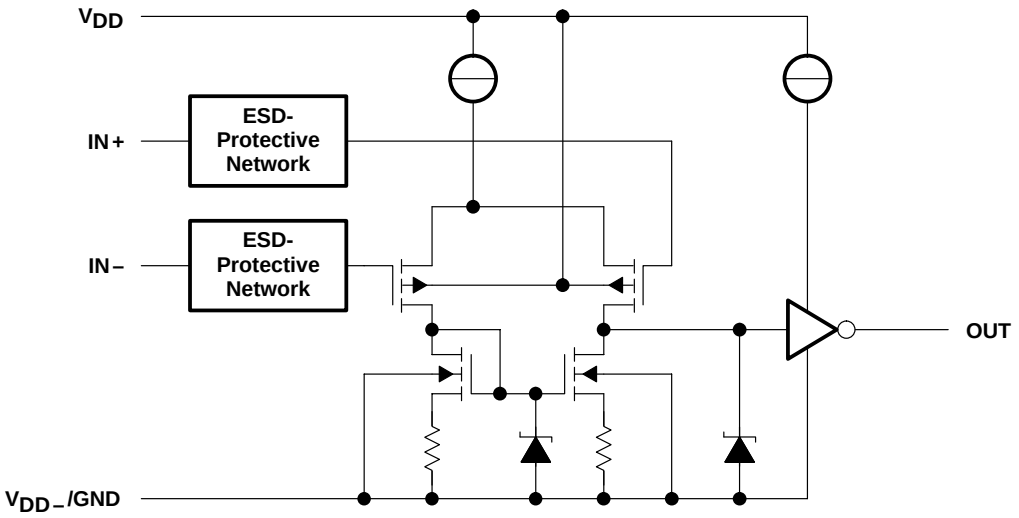

chip information

These chips, when properly assembled, display characteristics similar to the TLC25_4C. Thermal compression or ultrasonic bonding may be used on the doped-aluminum bonding pads. Chips may be mounted with conductive epoxy or a gold-silicon preform.

BONDING PAD ASSIGNMENTS

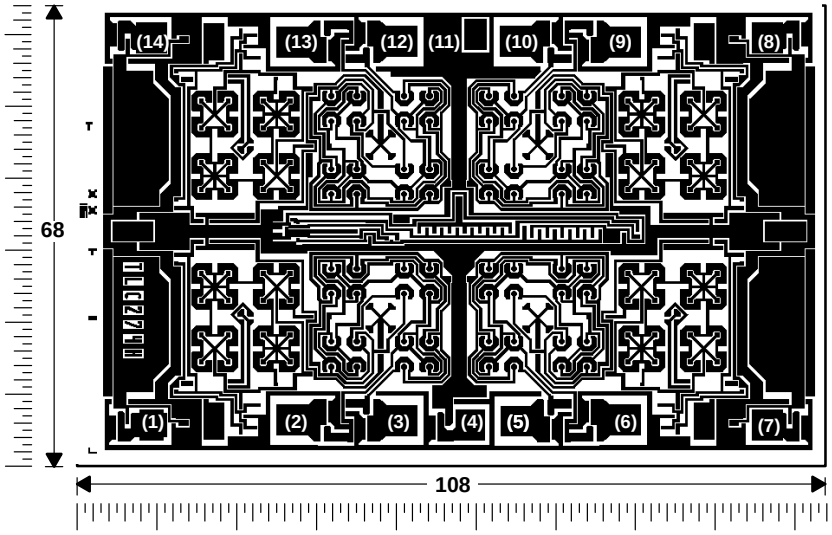

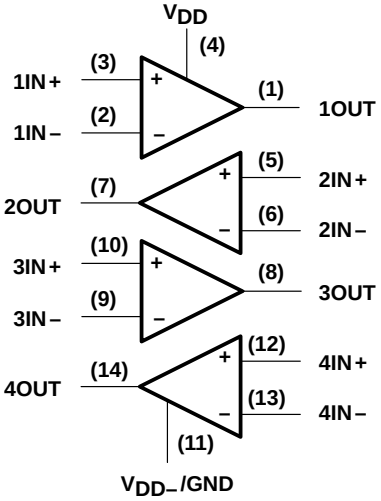

CHIP THICKNESS: 15 TYPICAL

BONDING PADS: 4 × 4 MINIMUM

$T_J$max = 150°C

TOLERANCES ARE ±10%.

ALL DIMENSIONS ARE IN MILS.

PIN (11) IS INTERNALLY CONNECTED TO BACKSIDE OF CHIP.

absolute maximum ratings over operating free-air temperature range (unless otherwise noted)†

Supply voltage, V_{DD} (see Note 1) . . . . . 18 V
Differential input voltage (see Note 2) . . . . . ±18 V
Input voltage range (any input) . . . . . –0.3 V to 18 V
Duration of short-circuit at (or below) 25°C free-air temperature (see Note 3) . . . . . unlimited
Continuous total dissipation . . . . . See Dissipation Rating Table
Operating free-air temperature range . . . . . 0°C to 70°C
Storage temperature range . . . . . –65°C to 150°C
Lead temperature 1,6 mm (1/16 inch) from case for 10 seconds . . . . . 260°C

† Stresses beyond those listed under "absolute maximum ratings" may cause permanent damage to the device. These are stress ratings only, and functional operation of the device at these or any other conditions beyond those indicated under "recommended operating conditions" is not implied. Exposure to absolute-maximum-rated conditions for extended periods may affect device reliability.

NOTES:
1. All voltage values, except differential voltages, are with respect to V_{DD-}/GND.
2. Differential voltages are at IN+, with respect to IN–.
3. The output may be shorted to either supply. Temperature and/or supply voltages must be limited to ensure the maximum dissipation rating is not exceeded.

DISSIPATION RATING TABLE

PACKAGE	$T_A \le 25°C$ POWER RATING	DERATING FACTOR ABOVE $T_A = 25°C$	$T_A = 70°C$ POWER RATING
D	725 mW	5.8 mW/°C	464 mW
N	1050 mW	9.2 mW/°C	736 mW
PW	700 mW	5.6 mW/°C	448 mW

recommended operating conditions

		MIN	MAX	UNIT
Supply voltage, V_{DD}		1.4	16	V
Common-mode input voltage, V_{IC}	V_{DD} = 1.4 V	0	0.2	V
	V_{DD} = 5 V	–0.2	4	
	V_{DD} = 10 V	–0.2	9	
	V_{DD} = 16 V	–0.2	14	
Operating free-air temperature, T_A		0	70	°C

electrical characteristics at specified free-air temperature, V_{DD} = 1.4 V (unless otherwise noted)

PARAMETER			TEST CONDITIONS†	T_A	TLC254_C			TLC25L4_C			TLC25M4_C			UNIT
					MIN	TYP	MAX	MIN	TYP	MAX	MIN	TYP	MAX	
V_{IO}	Input offset voltage	TLC25_4C	V_O = 0.2 V, R_S = 50 Ω	25°C			10			10			10	mV
				0°C to 70°C			12			12			12	
		TLC25_4AC		25°C			5			5			5	
				0°C to 70°C			6.5			6.5			6.5	
		TLC25_4BC		25°C			2			2			2	
				0°C to 70°C			3			3			3	
a_{VIO}	Average temperature coefficient of input offset voltage			25°C to 70°C		1			1			1		µV/°C
I_{IO}	Input offset current		V_O = 0.2 V	25°C		1	60		1	60		1	60	pA
				0°C to 70°C			300			300			300	
I_{IB}	Input bias current		V_O = 0.2 V	25°C		1	60		1	60		1	60	pA
				0°C to 70°C			600			600			600	
V_{ICR}	Common-mode input voltage range			25°C	0 to 0.2			0 to 0.2			0 to 0.2			V
V_{OM}	Peak output voltage swing‡		V_{ID} = 100 mV	25°C	450	700		450	700		450	700		mV
A_{VD}	Large-signal differential voltage amplification		V_O = 100 to 300 mV, R_S = 50 Ω	25°C		10			20			20		V/mV
CMRR	Common-mode rejection ratio		V_O = 0.2 V, V_{IC} = V_{ICR}min	25°C	60	77		60	77		60	77		dB
I_{DD}	Supply current		V_O = 0.2 V, No load	25°C		600	750		50	68		400	500	µA

† All characteristics are measured under open-loop conditions with zero common-mode input voltage unless otherwise specified. Unless otherwise noted, an output load resistor is connected from the output to ground and has the following value: for low bias, R_L = 1 MΩ, for medium bias R_L = 100 kΩ, and for high bias R_L = 10 kΩ.

‡ The output swings to the potential of V_{DD-}/GND.

operating characteristics, V_{DD} = 1.4 V, T_A = 25°C

PARAMETER		TEST CONDITIONS	TLC254_C			TLC25L4_C			TLC25M4_C			UNIT
			MIN	TYP	MAX	MIN	TYP	MAX	MIN	TYP	MAX	
SR	Slew rate at unity gain	See Figure 1		0.1			0.001			0.01		V/µs
B_1	Unity-gain bandwidth	A_V = 40 dB, R_S = 50 Ω, C_L = 10 pF, See Figure 1		12			12			12		kHz
	Overshoot factor	See Figure 1		30%			35%			35%		

electrical characteristics at specified free-air temperature, V_{DD} = 5 V (unless otherwise noted)

PARAMETER			TEST CONDITIONS		T_A†	TLC254, TLC254AC, TLC254BC			UNIT
						MIN	TYP	MAX	
V_{IO}	Input offset voltage	TLC254C	V_O = 1.4 V, R_S = 50 Ω,	V_{IC} = 0, R_L = 10 kΩ	25°C		1.1	10	mV
					Full range			12	
		TLC254AC	V_O = 1.4 V, R_S = 50 Ω,	V_{IC} = 0, R_L = 10 kΩ	25°C		0.9	5	
					Full range			6.5	
		TLC254BC	V_O = 1.4 V, R_S = 50 Ω,	V_{IC} = 0, R_L = 10 kΩ	25°C		0.34	2	
					Full range			3	
α_{VIO}	Average temperature coefficient of input offset voltage				25°C to 70°C		1.8		µV/°C
I_{IO}	Input offset current (see Note 4)		V_O = 2.5 V,	V_{IC} = 2.5 V	25°C		0.1	60	pA
					70°C		7	300	
I_{IB}	Input bias current (see Note 4)		V_O = 2.5 V,	V_{IC} = 2.5 V	25°C		0.6	60	pA
					70°C		40	600	
V_{ICR}	Common-mode input voltage range (see Note 5)				25°C	−0.2 to 4	−0.3 to 4.2		V
					Full range	−0.2 to 3.5			
V_{OH}	High-level output voltage		V_{ID} = 100 mV,	R_L = 10 kΩ	0°C	3	3.8		V
					25°C	3.2	3.8		
					70°C	3	3.8		
V_{OL}	Low-level output voltage		V_{ID} = −100 mV,	I_{OL} = 0	0°C		0	50	mV
					25°C		0	50	
					70°C		0	50	
A_{VD}	Large-signal differential voltage amplification		V_O = 0.25 V to 2 V,	R_L = 10 kΩ	0°C	4	27		V/mV
					25°C	5	23		
					70°C	4	20		
CMRR	Common-mode rejection ratio		V_{IC} = V_{ICR}min		0°C	60	84		dB
					25°C	65	80		
					70°C	60	85		
k_{SVR}	Supply-voltage rejection ratio ($\Delta V_{DD}/\Delta V_{IO}$)		V_{DD} = 5 V to 10 V,	V_O = 1.4 V	0°C	60	94		dB
					25°C	65	95		
					70°C	60	96		
I_{DD}	Supply current (four amplifiers)		V_O = 2.5 V, No load	V_{IC} = 2.5 V,	0°C		3.1	7.2	mA
					25°C		2.7	6.4	
					70°C		2.3	5.2	

† Full range is 0°C to 70°C.

NOTES: 4. The typical values of input bias current and input offset current below 5 pA were determined mathematically.
5. This range also applies to each input individually.

electrical characteristics at specified free-air temperature, V_{DD} = 10 V (unless otherwise noted)

PARAMETER			TEST CONDITIONS		T_A†	TLC254C, TLC254AC, TLC254BC MIN	TYP	MAX	UNIT
V_{IO}	Input offset voltage	TLC254C	V_O = 1.4 V, R_S = 50 Ω,	V_{IC} = 0, R_L = 10 kΩ	25°C		1.1	10	mV
					Full range			12	
		TLC254AC	V_O = 1.4 V, R_S = 50 Ω,	V_{IC} = 0, R_L = 10 kΩ	25°C		0.9	5	
					Full range			6.5	
		TLC254BC	V_O = 1.4 V, R_S = 50 Ω,	V_{IC} = 0, R_L = 10 kΩ	25°C		0.39	2	
					Full range			3	
α_{VIO}	Average temperature coefficient of input offset voltage				25°C to 70°C		2		µV/°C
I_{IO}	Input offset current (see Note 4)		V_O = 5 V,	V_{IC} = 5 V	25°C		0.1	60	pA
					70°C		7	300	
I_{IB}	Input bias current (see Note 4)		V_O = 5 V,	V_{IC} = 5 V	25°C		0.7	60	pA
					70°C		50	600	
V_{ICR}	Common-mode input voltage range (see Note 5)				25°C	–0.2 to 9	–0.3 to 9.2		V
					Full range	–0.2 to 8.5			
V_{OH}	High-level output voltage		V_{ID} = 100 mV,	R_L = 10 kΩ	0°C	7.8	8.5		V
					25°C	8	8.5		
					70°C	7.8	8.4		
V_{OL}	Low-level output voltage		V_{ID} = –100 mV,	I_{OL} = 0	0°C		0	50	mV
					25°C		0	50	
					70°C		0	50	
A_{VD}	Large-signal differential voltage amplification		V_O = 1 V to 6 V,	R_L = 10 kΩ	0°C	7.5	42		V/mV
					25°C	10	36		
					70°C	7.5	32		
CMRR	Common-mode rejection ratio		V_{IC} = V_{ICR}min		0°C	60	88		dB
					25°C	65	85		
					70°C	60	88		
k_{SVR}	Supply-voltage rejection ratio ($\Delta V_{DD}/\Delta V_{IO}$)		V_{DD} = 5 V to 10 V,	V_O = 1.4 V	0°C	60	94		dB
					25°C	65	95		
					70°C	60	96		
I_{DD}	Supply current (four amplifiers)		V_O = 5 V, No load	V_{IC} = 5 V,	0°C		4.5	8.8	mA
					25°C		3.8	8	
					70°C		3.2	6.8	

† Full range is 0°C to 70°C.

NOTES: 4. The typical values of input bias current and input offset current below 5 pA were determined mathematically.
5. This range also applies to each input individually.

operating characteristics, V_{DD} = 5 V

PARAMETER		TEST CONDITIONS			T_A	TLC254C, TLC254AC, TLC254BC MIN	TYP	MAX	UNIT
SR	Slew rate at unity gain	R_L = 10 kΩ, See Figure 1	C_L = 20 pF,	$V_{I(PP)}$ = 1 V	0°C		4		V/µs
					25°C		3.6		
				$V_{I(PP)}$ = 1 V	70°C		3		
				$V_{I(PP)}$ = 2.5 V	0°C		3.1		
					25°C		2.9		
					70°C		2.5		
V_n	Equivalent input noise voltage	f = 1 kHz,	R_S = 20 Ω,	See Figure 2	25°C		25		nV/√Hz
B_{OM}	Maximum output-swing bandwidth	$V_O = V_{OH}$, See Figure 1	C_L = 20 pF,	R_L = 10 kΩ,	0°C		340		kHz
					25°C		320		
					70°C		260		
B_1	Unity-gain bandwidth	V_I = 10 mV,	C_L = 20 pF,	See Figure 1	0°C		2		MHz
					25°C		1.7		
					70°C		1.3		
ϕ_m	Phase margin	V_I = 10 mV, See Figure 3	f = B_1,	C_L = 20 pF,	0°C		47°		
					25°C		46°		
					70°C		43°		

operating characteristics, V_{DD} = 10 V

PARAMETER		TEST CONDITIONS			T_A	TLC254C, TLC254AC, TLC254BC MIN	TYP	MAX	UNIT
SR	Slew rate at unity gain	R_L = 10 kΩ, See Figure 1	C_L = 20 pF,	$V_{I(PP)}$ = 1 V	0°C		5.9		V/µs
					25°C		5.3		
					70°C		4.3		
				$V_{I(PP)}$ = 5.5 V	0°C		5.1		
					25°C		4.6		
					70°C		3.8		
V_n	Equivalent input noise voltage	f = 1 kHz,	R_S = 20 Ω,	See Figure 2	25°C		25		nV/√Hz
B_{OM}	Maximum output-swing bandwidth	$V_O = V_{OH}$, See Figure 1	C_L = 20 pF,	R_L = 10 kΩ,	0°C		220		kHz
					25°C		200		
					70°C		140		
B_1	Unity-gain bandwidth	V_I = 10 mV,	C_L = 20 pF,	See Figure 1	0°C		2.5		MHz
					25°C		2.2		
					70°C		1.8		
ϕ_m	Phase margin	V_I = 10 mV, See Figure 3	f = B_1,	C_L = 20 pF,	0°C		50°		
					25°C		49°		
					70°C		46°		

electrical characteristics at specified free-air temperature, V_{DD} = 5 V (unless otherwise noted)

PARAMETER			TEST CONDITIONS		T_A†	TLC25L4C TLC25L4AC TLC25L4BC MIN	TYP	MAX	UNIT
V_{IO}	Input offset voltage	TLC25L4C	V_O = 1.4 V, R_S = 50 Ω,	V_{IC} = 0, R_L = 1 MΩ	25°C		1.1	10	mV
					Full range			12	
		TLC25L4AC	V_O = 1.4 V, R_S = 50 Ω,	V_{IC} = 0, R_L = 1 MΩ	25°C		0.9	5	
					Full range			6.5	
		TLC25L4BC	V_O = 1.4 V, R_S = 50 Ω,	V_{IC} = 0, R_L = 1 MΩ	25°C		0.24	2	
					Full range			3	
α_{VIO}	Average temperature coefficient of input offset voltage				25°C to 70°C		1.1		µV/°C
I_{IO}	Input offset current (see Note 4)		V_O = 2.5 V,	V_{IC} = 2.5 V	25°C		0.1	60	pA
					70°C		7	300	
I_{IB}	Input bias current (see Note 4)		V_O = 2.5 V,	V_{IC} = 2.5 V	25°C		0.6	60	pA
					70°C		40	600	
V_{ICR}	Common-mode input voltage range (see Note 5)				25°C	–0.2 to 4	–0.3 to 4.2		V
					Full range	–0.2 to 3.5			V
V_{OH}	High-level output voltage		V_{ID} = 100 mV,	R_L = 1 MΩ	0°C	3	4.1		V
					25°C	3.2	4.1		
					70°C	3	4.2		
V_{OL}	Low-level output voltage		V_{ID} = –100 mV,	I_{OL} = 0	0°C		0	50	mV
					25°C		0	50	
					70°C		0	50	
A_{VD}	Large-signal differential voltage amplification		V_O = 0.25 V to 2 V,	R_L = 1 MΩ	0°C	50	680		V/mV
					25°C	50	520		
					70°C	50	380		
CMRR	Common-mode rejection ratio		V_{IC} = V_{ICR}min		0°C	60	95		dB
					25°C	65	94		
					70°C	60	95		
k_{SVR}	Supply-voltage rejection ratio ($\Delta V_{DD}/\Delta V_{IO}$)		V_{DD} = 5 V to 10 V,	V_O = 1.4 V	0°C	60	97		dB
					25°C	70	98		
					70°C	60	97		
I_{DD}	Supply current (four amplifiers)		V_O = 2.5 V, No load	V_{IC} = 2.5 V,	0°C		48	84	µA
					25°C		40	68	
					70°C		31	56	

† Full range is 0°C to 70°C.

NOTES: 4. The typical values of input bias current and input offset current below 5 pA were determined mathematically.
5. This range also applies to each input individually.

electrical characteristics at specified free-air temperature, V_{DD} = 10 V (unless otherwise noted)

PARAMETER			TEST CONDITIONS		T_A†	TLC25L4C TLC25L4AC TLC25L4BC MIN	TYP	MAX	UNIT
V_{IO}	Input offset voltage	TLC25L4C	V_O = 1.4 V, R_S = 50 Ω,	V_{IC} = 0, R_L = 1 MΩ	25°C		1.1	10	mV
					Full range			12	
		TLC25L4AC	V_O = 1.4 V, R_S = 50 Ω,	V_{IC} = 0, R_L = 1 MΩ	25°C		0.9	5	
					Full range			6.5	
		TLC25L4BC	V_O = 1.4 V, R_S = 50 Ω,	V_{IC} = 0, R_L = 1 MΩ	25°C		0.26	2	
					Full range			3	
α_{VIO}	Average temperature coefficient of input offset voltage				25°C to 70°C		1		µV/°C
I_{IO}	Input offset current (see Note 4)		V_O = 5 V,	V_{IC} = 5 V	25°C		0.1	60	pA
					70°C		7	300	
I_{IB}	Input bias current (see Note 4)		V_O = 5 V,	V_{IC} =.5 V	25°C		0.7	60	pA
					70°C		50	600	
V_{ICR}	Common-mode input voltage range (see Note 5)				25°C	−0.2 to 9	−0.3 to 9.2		V
					Full range	−0.2 to 8.5			V
V_{OH}	High-level output voltage		V_{ID} = 100 mV,	R_L = 1 MΩ	0°C	7.8	8.9		V
					25°C	8	8.9		
					70°C	7.8	8.9		
V_{OL}	Low-level output voltage		V_{ID} = −100 mV,	I_{OL} = 0	0°C		0	50	mV
					25°C		0	50	
					70°C		0	50	
A_{VD}	Large-signal differential voltage amplification		V_O = 1 V to 6 V,	R_L = 1 MΩ	0°C	50	1025		V/mV
					25°C	50	870		
					70°C	50	660		
CMRR	Common-mode rejection ratio		V_{IC} = V_{ICR}min		0°C	60	97		dB
					25°C	65	97		
					70°C	60	97		
k_{SVR}	Supply-voltage rejection ratio ($\Delta V_{DD}/\Delta V_{IO}$)		V_{DD} = 5 V to 10 V,	V_O = 1.4 V	0°C	60	97		dB
					25°C	70	97		
					70°C	60	98		
I_{DD}	Supply current (four amplifiers)		V_O = 5 V, No load	V_{IC} = 5 V,	0°C		72	132	µA
					25°C		57	92	
					70°C		44	80	

† Full range is 0°C to 70°C.

NOTES: 4. The typical values of input bias current and input offset current below 5 pA were determined mathematically.
5. This range also applies to each input individually.

operating characteristics, V_{DD} = 5 V

PARAMETER		TEST CONDITIONS			T_A	TLC25L4C TLC25L4AC TLC25L4BC MIN	TYP	MAX	UNIT
SR	Slew rate at unity gain	R_L = 1 MΩ, See Figure 1	C_L = 20 pF,	$V_{I(PP)}$ = 1 V	0°C		0.04		V/µs
					25°C		0.03		
					70°C		0.03		
				$V_{I(PP)}$ = 2.5 V	0°C		0.03		
					25°C		0.03		
					70°C		0.02		
V_n	Equivalent input noise voltage	f = 1 kHz,	R_S = 20 Ω,	See Figure 2	25°C		70		nV/√Hz
B_{OM}	Maximum output-swing bandwidth	$V_O = V_{OH}$, See Figure 1	C_L = 20 pF,	R_L = 1 MΩ,	0°C		6		kHz
					25°C		5		
					70°C		4.5		
B_1	Unity-gain bandwidth	V_I = 10 mV,	C_L = 20 pF,	See Figure 1	0°C		100		kHz
					25°C		85		
					70°C		65		
ϕ_m	Phase margin	V_I = 10 mV, See Figure 3	f = B_1,	C_L = 20 pF,	0°C		36°		
					25°C		34°		
					70°C		30°		

operating characteristics, V_{DD} = 10 V

PARAMETER		TEST CONDITIONS			T_A	TLC25L4C TLC25L4AC TLC25L4BC MIN	TYP	MAX	UNIT
SR	Slew rate at unity gain	R_L = 1 MΩ, See Figure 1	C_L = 20 pF,	$V_{I(PP)}$ = 1 V	0°C		0.05		V/µs
					25°C		0.05		
					70°C		0.04		
				$V_{I(PP)}$ = 5.5 V	0°C		0.05		
					25°C		0.04		
					70°C		0.04		
V_n	Equivalent input noise voltage	f = 1 kHz,	R_S = 20 Ω,	See Figure 2	25°C		70		nV/√Hz
B_{OM}	Maximum output-swing bandwidth	$V_O = V_{OH}$, See Figure 1	C_L = 20 pF,	R_L = 1 MΩ,	0°C		1.3		kHz
					25°C		1		
					70°C		0.9		
B_1	Unity-gain bandwidth	V_I = 10 mV,	C_L = 20 pF,	See Figure 1	0°C		125		kHz
					25°C		110		
					70°C		90		
ϕ_m	Phase margin	V_I = 10 mV, See Figure 3	f = B_1,	C_L = 20 pF,	0°C		40°		
					25°C		38°		
					70°C		34°		

electrical characteristics at specified free-air temperature, V_{DD} = 5 V (unless otherwise noted)

PARAMETER			TEST CONDITIONS		T_A†	TLC25M4C TLC25M4AC TLC25M4BC MIN	TYP	MAX	UNIT
V_{IO}	Input offset voltage	TLC25M4C	V_O = 1.4 V, R_S = 50 Ω,	V_{IC} = 0, R_L = 100 kΩ	25°C		1.1	10	mV
					Full range			12	
		TLC25M4AC	V_O = 1.4 V, R_S = 50 Ω,	V_{IC} = 0, R_L = 100 kΩ	25°C		0.9	5	
					Full range			6.5	
		TLC25M4BC	V_O = 1.4 V, R_S = 50 Ω,	V_{IC} = 0, R_L = 100 kΩ	25°C		0.25	2	
					Full range			3	
α_{VIO}	Average temperature coefficient of input offset voltage				25°C to 70°C		1.7		μV/°C
I_{IO}	Input offset current (see Note 4)		V_O = 2.5 V,	V_{IC} = 2.5 V	25°C		0.1	60	pA
					70°C		7	300	
I_{IB}	Input bias current (see Note 4)		V_O = 2.5 V,	V_{IC} = 2.5 V	25°C		0.6	60	pA
					70°C		40	600	
V_{ICR}	Common-mode input voltage range (see Note 5)				25°C	−0.2 t0 4	−0.3 to 4.2		V
					Full range	−0.2 to 3.5			V
V_{OH}	High-level output voltage		V_{ID} = 100 mV,	R_L = 100 kΩ	0°C	3	3.9		V
					25°C	3.2	3.9		
					70°C	3	4		
V_{OL}	Low-level output voltage		V_{ID} = −100 mV,	I_{OL} = 0	0°C		0	50	mV
					25°C		0	50	
					70°C		0	50	
A_{VD}	Large-signal differential voltage amplification		V_O = 0.25 V to 2 V,	R_L = 100 kΩ	0°C	15	200		V/mV
					25°C	25	170		
					70°C	15	140		
CMRR	Common-mode rejection ratio		V_{IC} = V_{ICR}min		0°C	60	91		dB
					25°C	65	91		
					70°C	60	92		
k_{SVR}	Supply-voltage rejection ratio ($\Delta V_{DD}/\Delta V_{IO}$)		V_{DD} = 5 V to 10 V,	V_O = 1.4 V	0°C	60	92		dB
					25°C	70	93		
					70°C	60	94		
I_{DD}	Supply current (four amplifiers)		V_O = 2.5 V, No load	V_{IC} = 2.5 V,	0°C		500	1280	μA
					25°C		420	1120	
					70°C		340	880	

† Full range is 0°C to 70°C.

NOTES: 4. The typical values of input bias current and input offset current below 5 pA were determined mathematically.
5. This range also applies to each input individually.

electrical characteristics at specified free-air temperature, V_{DD} = 10 V (unless otherwise noted)

PARAMETER			TEST CONDITIONS		T_A†	TLC25M4C TLC25M4AC TLC25M4BC MIN	TYP	MAX	UNIT
V_{IO}	Input offset voltage	TLC25M4C	V_O = 1.4 V, R_S = 50 Ω,	V_{IC} = 0, R_L = 100 kΩ	25°C		1.1	10	mV
					Full range			12	
		TLC25M4AC	V_O = 1.4 V, R_S = 50 Ω,	V_{IC} = 0, R_L = 100 kΩ	25°C		0.9	5	
					Full range			6.5	
		TLC25M4BC	V_O = 1.4 V, R_S = 50 Ω,	V_{IC} = 0, R_L = 100 kΩ	25°C		0.26	2	
					Full range			3	
α_{VIO}	Average temperature coefficient of input offset voltage				25°C to 70°C		2.1		μV/°C
I_{IO}	Input offset current (see Note 4)		V_O = 5 V,	V_{IC} = 5 V	25°C		0.1	60	pA
					70°C		7	300	
I_{IB}	Input bias current (see Note 4)		V_O = 5 V,	V_{IC} = 5 V	25°C		0.7	60	pA
					70°C		50	600	
V_{ICR}	Common-mode input voltage range (see Note 5)				25°C	−0.2 to 9	−0.3 to 9.2		V
					Full range	−0.2 to 8.5			V
V_{OH}	High-level output voltage		V_{ID} = 100 mV,	R_L = 100 kΩ	0°C	7.8	8.7		V
					25°C	8	8.7		
					70°C	7.8	8.7		
V_{OL}	Low-level output voltage		V_{ID} = −100 mV,	I_{OL} = 0	0°C		0	50	mV
					25°C		0	50	
					70°C		0	50	
A_{VD}	Large-signal differential voltage amplification		V_O = 1 V to 6 V,	R_L = 100 kΩ	0°C	15	320		V/mV
					25°C	25	275		
					70°C	15	230		
CMRR	Common-mode rejection ratio		V_{IC} = V_{ICR}min		0°C	60	94		dB
					25°C	65	94		
					70°C	60	94		
k_{SVR}	Supply-voltage rejection ratio ($\Delta V_{DD}/\Delta V_{IO}$)		V_{DD} = 5 V to 10 V,	V_O = 1.4 V	0°C	60	92		dB
					25°C	70	93		
					70°C	60	94		
I_{DD}	Supply current (four amplifiers)		V_O = 5 V, No load	V_{IC} = 5 V,	0°C		690	1600	μA
					25°C		570	1200	
					70°C		440	1120	

† Full range is 0°C to 70°C.

NOTES: 4. The typical values of input bias current and input offset current below 5 pA were determined mathematically.
5. This range also applies to each input individually.

operating characteristics, V_{DD} = 5 V

PARAMETER		TEST CONDITIONS			T_A	TLC25M4C TLC25M4AC TLC25M4BC MIN	TYP	MAX	UNIT
SR	Slew rate at unity gain	R_L = 100 kΩ, See Figure 1	C_L = 20 pF,	$V_{I(PP)}$ = 1 V	0°C		0.46		V/µs
					25°C		0.43		V/µs
					70°C		0.36		V/µs
				$V_{I(PP)}$ = 2.5 V	0°C		0.43		
					25°C		0.40		
					70°C		0.34		
V_n	Equivalent input noise voltage	f = 1 kHz,	R_S = 20 Ω,	See Figure 2	25°C		32		nV/√Hz
B_{OM}	Maximum output-swing bandwidth	$V_O = V_{OH}$, See Figure 1	C_L = 20 pF,	R_L = 100 kΩ,	0°C		60		kHz
					25°C		55		
					70°C		50		
B_1	Unity-gain bandwidth	V_I = 10 mV,	C_L = 20 pF,	See Figure 1	0°C		610		kHz
					25°C		525		
					70°C		400		
ϕ_m	Phase margin	V_I = 10 mV, See Figure 3	f = B_1,	C_L = 20 pF,	0°C		41°		
					25°C		40°		
					70°C		39°		

operating characteristics, V_{DD} = 10 V

PARAMETER		TEST CONDITIONS			T_A	TLC25M4C TLC25M4AC TLC25M4BC MIN	TYP	MAX	UNIT
SR	Slew rate at unity gain	R_L = 100 kΩ, See Figure 1	C_L = 20 pF,	$V_{I(PP)}$ = 1 V	0°C		0.67		V/µs
					25°C		0.62		
					70°C		0.51		
				$V_{I(PP)}$ = 5.5 V	0°C		0.61		
					25°C		0.56		
					70°C		0.46		
V_n	Equivalent input noise voltage	f = 1 kHz,	R_S = 20 Ω,	See Figure 2	25°C		32		nV/√Hz
B_{OM}	Maximum output-swing bandwidth	$V_O = V_{OH}$, See Figure 1	C_L = 20 pF,	R_L = 100 kΩ,	0°C		40		kHz
					25°C		35		
					70°C		30		
B_1	Unity-gain bandwidth	V_I = 10 mV,	C_L = 20 pF,	See Figure 1	0°C		710		kHz
					25°C		635		
					70°C		510		
ϕ_m	Phase margin	V_I = 10 mV, See Figure 3	f = B_1,	C_L = 20 pF,	0°C		44°		
					25°C		43°		
					70°C		42°		

electrical characteristics, V_{DD} = 5 V, T_A = 25°C (unless otherwise noted)

PARAMETER		TEST CONDITIONS	TLC254Y			TLC25L4Y			TLC25M4Y			UNIT
			MIN	TYP	MAX	MIN	TYP	MAX	MIN	TYP	MAX	
V_{IO}	Input offset voltage	V_O = 1.4 V, V_{IC} = 0 V, R_S = 50 Ω, See Note 6		1.1	10		1.1	10		1.1	10	mV
α_{VIO}	Average temperature coefficient of input offset voltage			1.8			1.1			1.7		µV/°C
I_{IO}	Input offset current (see Note 4)	$V_O = V_{DD}/2$, $V_{IC} = V_{DD}/2$		0.1	60		0.1	60		0.1	60	pA
I_{IB}	Input bias current (see Note 4)	$V_O = V_{DD}/2$, $V_{IC} = V_{DD}/2$		0.6	60		0.6	60		0.6	60	pA
V_{ICR}	Common-mode input voltage range (see Note 5)		−0.2 to 4	−0.3 to 4.2		−0.2 to 4	−0.3 to 4.2		−0.2 to 4	−0.3 to 4.2		V
V_{OH}	High-level output voltage	V_{ID} = 100 mV, R_L = 100 kΩ	3.2	3.8		3.2	4.1		3.2	3.9		V
V_{OL}	Low-level output voltage	V_{ID} = −100 mV, I_{OL} = 0		0	50		0	50		0	50	mV
A_{VD}	Large-signal differential voltage amplification	V_O = 0.25 V, See Note 6	5	23		50	520		25	170		V/mV
CMRR	Common-mode rejection ratio	$V_{IC} = V_{ICR}$min	65	80		65	94		65	91		dB
k_{SVR}	Supply-voltage rejection ratio ($\Delta V_{DD}/\Delta V_{IO}$)	V_{DD} = 5 V to 10 V, V_O = 1.4 V	65	95		70	97		70	93		dB
I_{DD}	Supply current	$V_O = V_{DD}/2$, $V_{IC} = V_{DD}/2$, No load		2.7	6.4		0.04	0.068		0.42	1.12	mA

NOTES: 4. The typical values of input bias current and input offset current below 5 pA were determined mathematically.
5. This range also applies to each input individually.
6. For low-bias mode, R_L = 1 MΩ, for medium-bias mode, R_L = 100 kΩ, and for high-bias mode, R_L = 10 kΩ.

operating characteristics, V_{DD} = 5 V, T_A = 25°C

PARAMETER		TEST CONDITIONS		TLC254Y			TLC25L4Y			TLC25M4Y			UNIT
				MIN	TYP	MAX	MIN	TYP	MAX	MIN	TYP	MAX	
SR	Slew rate at unity gain	C_L = 20 pF, See Note 6	$V_{I(PP)}$ = 1 V		3.6			0.03			0.43		V/µs
			$V_{I(PP)}$ = 2.5 V		2.9			0.03			0.40		
V_n	Equivalent input noise voltage	f = 1 kHz,	R_S = 20 Ω		2.5			70			32		nV/√Hz
B_{OM}	Maximum output-swing bandwidth	$V_O = V_{OH}$, R_L = 10 kΩ	C_L = 20 pF,		320			5			55		kHz
B_1	Unity-gain bandwidth	V_I = 10 mV,	C_L = 20 pF		1.7			0.085			0.525		MHz
ϕ_m	Phase margin	f = B_1, C_L = 20 pF	V_I = 10 mV,		46°			34°			40°		

NOTE 6: For low-bias mode, R_L = 1 MΩ, for medium-bias mode, R_L = 100 kΩ, and for high-bias mode, R_L = 10 kΩ.

PARAMETER MEASUREMENT INFORMATION

single-supply versus split-supply test circuits

Because the TLC25_4, TLC25_4A, and TLC25_4B are optimized for single-supply operation, circuit configurations used for the various tests often present some inconvenience since the input signal, in many cases, must be offset from ground. This inconvenience can be avoided by testing the device with split supplies and the output load tied to the negative rail. A comparison of single-supply versus split-supply test circuits is shown below. The use of either circuit gives the same result.

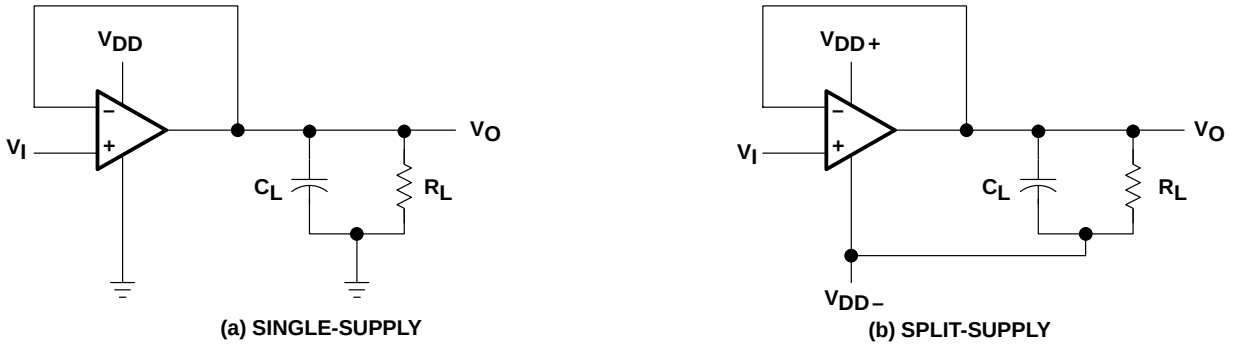

Figure 1. Unity-Gain Amplifier

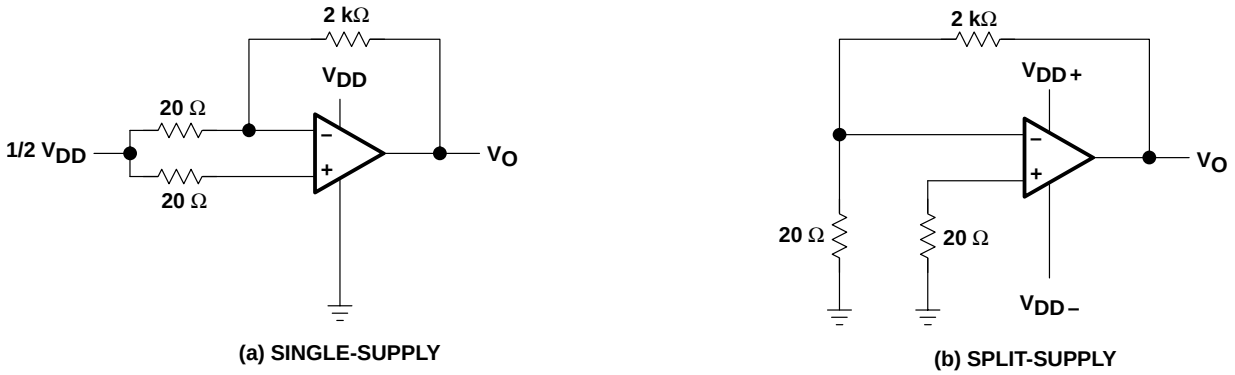

Figure 2. Noise-Test Circuit

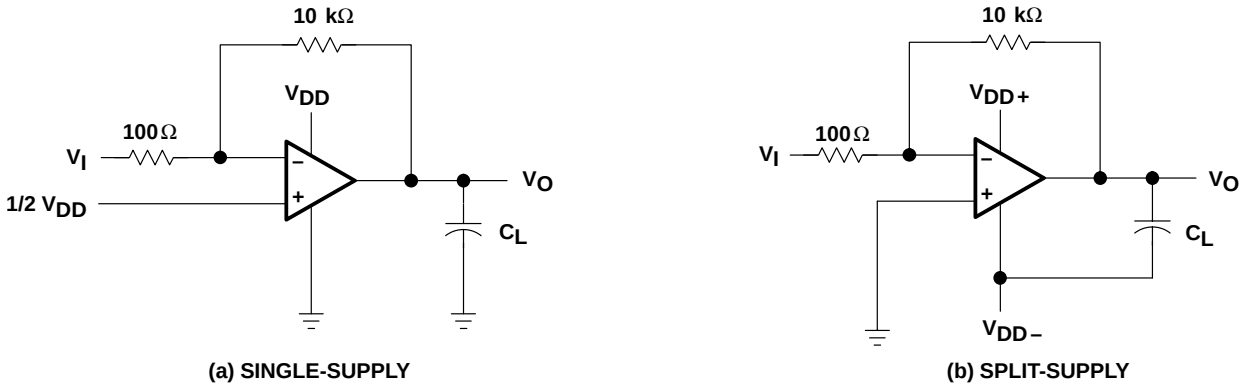

Figure 3. Gain-of-100 Inverting Amplifier

TYPICAL CHARACTERISTICS

Table of Graphs

				FIGURE
I_{DD}	Supply current		vs Supply voltage vs Free-air temperature	4 5
A_{VD}	Large-signal differential voltage amplification	Low bias	vs Frequency	6
		Medium bias	vs Frequency	7
		High bias	vs Frequency	8
	Phase shift	Low bias	vs Frequency	6
		Medium bias	vs Frequency	7
		High bias	vs Frequency	8

SUPPLY CURRENT vs SUPPLY VOLTAGE

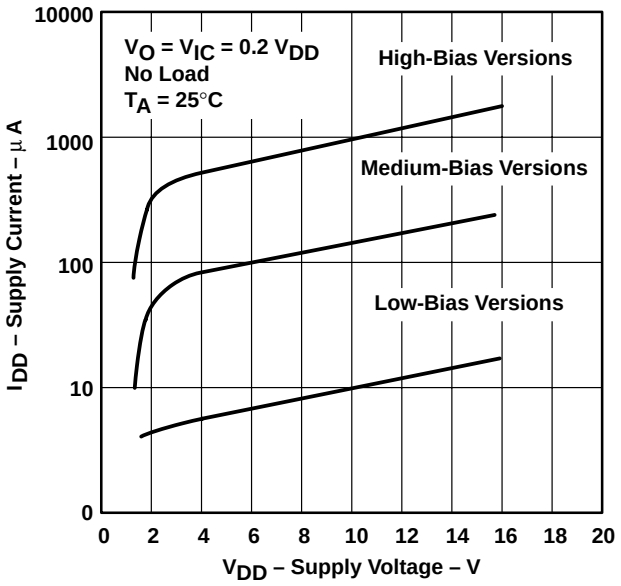

Figure 4

SUPPLY CURRENT vs FREE-AIR TEMPERATURE

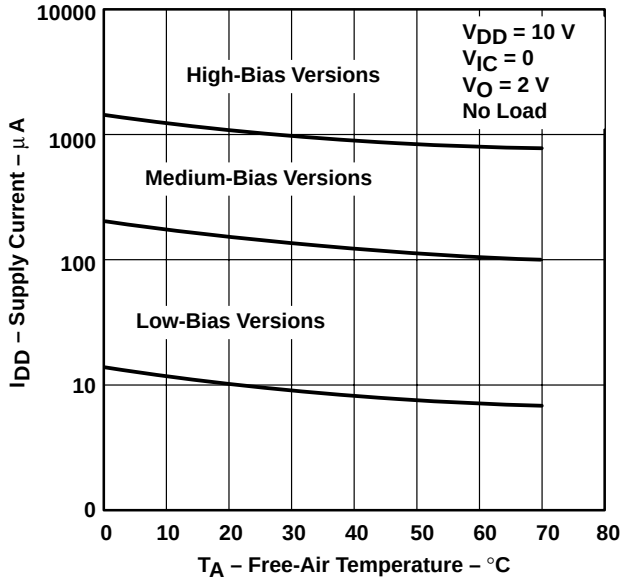

Figure 5

TYPICAL CHARACTERISTICS

LOW-BIAS LARGE-SIGNAL DIFFERENTIAL VOLTAGE AMPLIFICATION AND PHASE SHIFT vs FREQUENCY

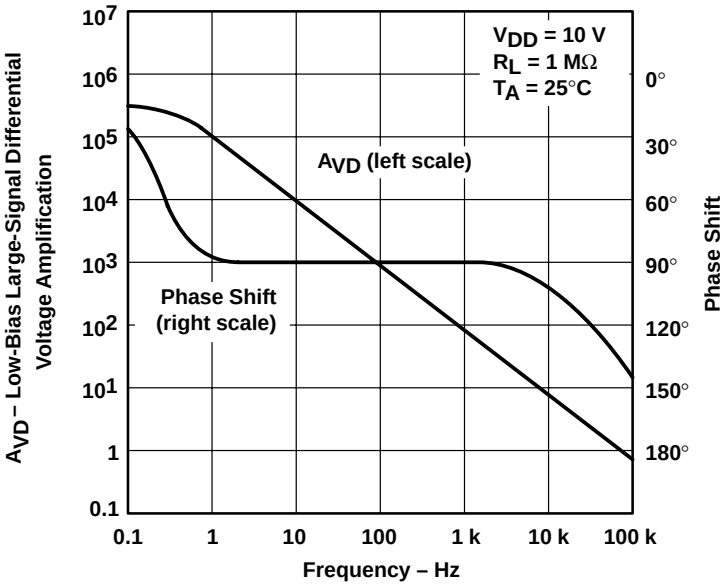

Figure 6

MEDIUM-BIAS LARGE-SIGNAL DIFFERENTIAL VOLTAGE AMPLIFICATION AND PHASE SHIFT vs FREQUENCY

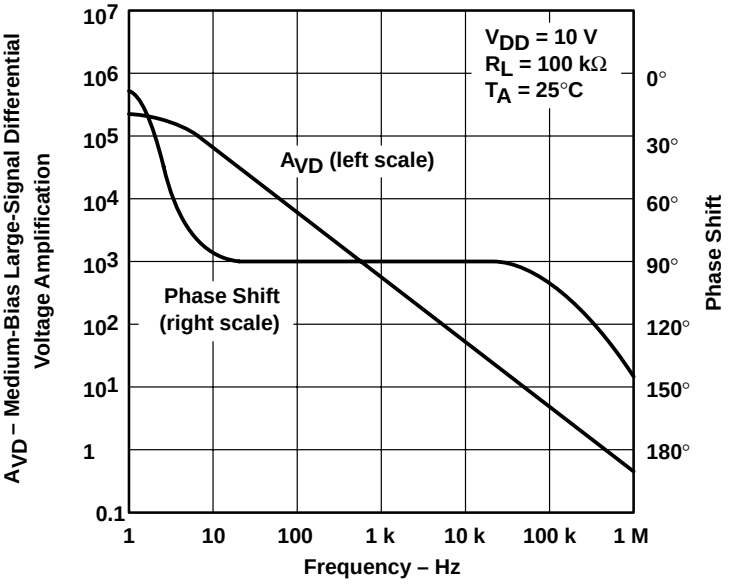

Figure 7

TYPICAL CHARACTERISTICS

HIGH-BIAS LARGE-SIGNAL DIFFERENTIAL VOLTAGE AMPLIFICATION AND PHASE SHIFT vs FREQUENCY

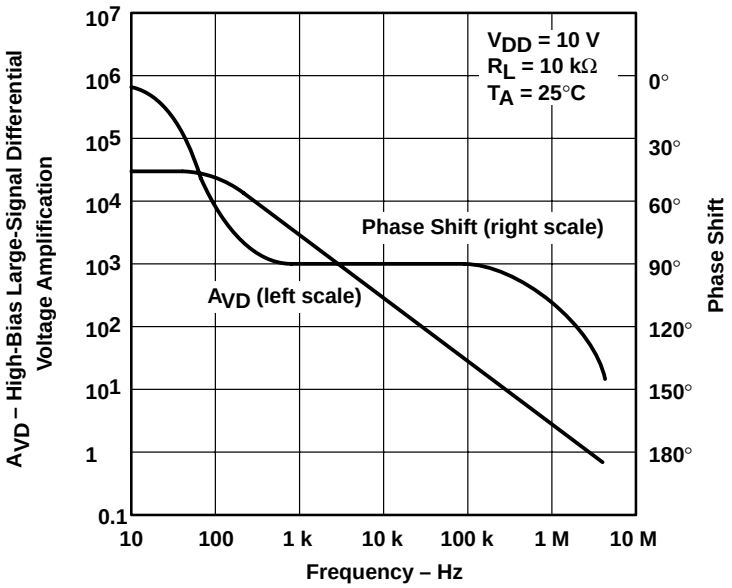

Figure 8

APPLICATION INFORMATION

latch-up avoidance

Junction-isolated CMOS circuits have an inherent parasitic PNPN structure that can function as an SCR. Under certain conditions, this SCR may be triggered into a low-impedance state, resulting in excessive supply current. To avoid such conditions, no voltage greater than 0.3 V beyond the supply rails should be applied to any pin. In general, the operational amplifiers supplies should be established simultaneously with, or before, application of any input signals.

output stage considerations

The amplifier's output stage consists of a source-follower-connected pullup transistor and an open-drain pulldown transistor. The high-level output voltage (V_{OH}) is virtually independent of the I_{DD} selection and increases with higher values of V_{DD} and reduced output loading. The low-level output voltage (V_{OL}) decreases with reduced output current and higher input common-mode voltage. With no load, V_{OL} is essentially equal to the potential of V_{DD-}/GND.

supply configurations

Even though the TLC25_4C series is are characterized for single-supply operation, they can be used effectively in a split-supply configuration if the input common-mode voltage (V_{ICR}), output swing (V_{OL} and V_{OH}), and supply voltage limits are not exceeded.

circuit layout precautions

Whenever extremely high circuit impedances are used, care must be exercised in layout, construction, board cleanliness, and supply filtering to avoid hum and noise pickup as well as excessive dc leakages.

PACKAGING INFORMATION

Orderable Device	Status (1)	Package Type	Package Drawing	Pins	Package Qty	Eco Plan (2)	Lead/ Ball Finish	MSL Peak Temp (3)	Samples (Requires Login)
TLC254ACD	ACTIVE	SOIC	D	14	50	Green (RoHS & no Sb/Br)	CU NIPDAU	Level-1-260C-UNLIM	
TLC254ACDG4	ACTIVE	SOIC	D	14	50	Green (RoHS & no Sb/Br)	CU NIPDAU	Level-1-260C-UNLIM	
TLC254ACN	ACTIVE	PDIP	N	14	25	Pb-Free (RoHS)	CU NIPDAU	N / A for Pkg Type	
TLC254ACNE4	ACTIVE	PDIP	N	14	25	Pb-Free (RoHS)	CU NIPDAU	N / A for Pkg Type	
TLC254BCD	ACTIVE	SOIC	D	14	50	Green (RoHS & no Sb/Br)	CU NIPDAU	Level-1-260C-UNLIM	
TLC254BCDG4	ACTIVE	SOIC	D	14	50	Green (RoHS & no Sb/Br)	CU NIPDAU	Level-1-260C-UNLIM	
TLC254BCN	ACTIVE	PDIP	N	14	25	Pb-Free (RoHS)	CU NIPDAU	N / A for Pkg Type	
TLC254BCNE4	ACTIVE	PDIP	N	14	25	Pb-Free (RoHS)	CU NIPDAU	N / A for Pkg Type	
TLC254CD	ACTIVE	SOIC	D	14	50	Green (RoHS & no Sb/Br)	CU NIPDAU	Level-1-260C-UNLIM	
TLC254CDG4	ACTIVE	SOIC	D	14	50	Green (RoHS & no Sb/Br)	CU NIPDAU	Level-1-260C-UNLIM	
TLC254CN	ACTIVE	PDIP	N	14	25	Pb-Free (RoHS)	CU NIPDAU	N / A for Pkg Type	
TLC254CNE4	ACTIVE	PDIP	N	14	25	Pb-Free (RoHS)	CU NIPDAU	N / A for Pkg Type	
TLC25L4ACN	ACTIVE	PDIP	N	14	25	Pb-Free (RoHS)	CU NIPDAU	N / A for Pkg Type	
TLC25L4ACNE4	ACTIVE	PDIP	N	14	25	Pb-Free (RoHS)	CU NIPDAU	N / A for Pkg Type	
TLC25L4BCD	ACTIVE	SOIC	D	14	50	Green (RoHS & no Sb/Br)	CU NIPDAU	Level-1-260C-UNLIM	
TLC25L4BCDG4	ACTIVE	SOIC	D	14	50	Green (RoHS & no Sb/Br)	CU NIPDAU	Level-1-260C-UNLIM	
TLC25L4BCN	ACTIVE	PDIP	N	14	25	Pb-Free (RoHS)	CU NIPDAU	N / A for Pkg Type	
TLC25L4BCNE4	ACTIVE	PDIP	N	14	25	Pb-Free (RoHS)	CU NIPDAU	N / A for Pkg Type	
TLC25L4CD	ACTIVE	SOIC	D	14	50	Green (RoHS & no Sb/Br)	CU NIPDAU	Level-1-260C-UNLIM	
TLC25L4CDB	OBSOLETE	SSOP	DB	14		TBD	Call TI	Call TI	
TLC25L4CDG4	ACTIVE	SOIC	D	14	50	Green (RoHS & no Sb/Br)	CU NIPDAU	Level-1-260C-UNLIM	
TLC25L4CN	ACTIVE	PDIP	N	14	25	Pb-Free (RoHS)	CU NIPDAU	N / A for Pkg Type	

Orderable Device	Status [1]	Package Type	Package Drawing	Pins	Package Qty	Eco Plan [2]	Lead/ Ball Finish	MSL Peak Temp [3]	Samples (Requires Login)
TLC25L4CNE4	ACTIVE	PDIP	N	14	25	Pb-Free (RoHS)	CU NIPDAU	N / A for Pkg Type	
TLC25M4ACDR	PREVIEW	SOIC	D	14		TBD	Call TI	Call TI	
TLC25M4ACN	OBSOLETE	PDIP	N	14		TBD	Call TI	Call TI	
TLC25M4BCD	OBSOLETE	SOIC	D	14		TBD	Call TI	Call TI	
TLC25M4BCN	ACTIVE	PDIP	N	14	25	Pb-Free (RoHS)	CU NIPDAU	N / A for Pkg Type	
TLC25M4BCNE4	ACTIVE	PDIP	N	14	25	Pb-Free (RoHS)	CU NIPDAU	N / A for Pkg Type	
TLC25M4CD	ACTIVE	SOIC	D	14	50	Green (RoHS & no Sb/Br)	CU NIPDAU	Level-1-260C-UNLIM	
TLC25M4CDG4	ACTIVE	SOIC	D	14	50	Green (RoHS & no Sb/Br)	CU NIPDAU	Level-1-260C-UNLIM	
TLC25M4CN	ACTIVE	PDIP	N	14	25	Pb-Free (RoHS)	CU NIPDAU	N / A for Pkg Type	
TLC25M4CNE4	ACTIVE	PDIP	N	14	25	Pb-Free (RoHS)	CU NIPDAU	N / A for Pkg Type	

[1] The marketing status values are defined as follows:
ACTIVE: Product device recommended for new designs.
LIFEBUY: TI has announced that the device will be discontinued, and a lifetime-buy period is in effect.
NRND: Not recommended for new designs. Device is in production to support existing customers, but TI does not recommend using this part in a new design.
PREVIEW: Device has been announced but is not in production. Samples may or may not be available.
OBSOLETE: TI has discontinued the production of the device.

[2] Eco Plan - The planned eco-friendly classification: Pb-Free (RoHS), Pb-Free (RoHS Exempt), or Green (RoHS & no Sb/Br) - please check http://www.ti.com/productcontent for the latest availability information and additional product content details.
TBD: The Pb-Free/Green conversion plan has not been defined.
Pb-Free (RoHS): TI's terms "Lead-Free" or "Pb-Free" mean semiconductor products that are compatible with the current RoHS requirements for all 6 substances, including the requirement that lead not exceed 0.1% by weight in homogeneous materials. Where designed to be soldered at high temperatures, TI Pb-Free products are suitable for use in specified lead-free processes.
Pb-Free (RoHS Exempt): This component has a RoHS exemption for either 1) lead-based flip-chip solder bumps used between the die and package, or 2) lead-based die adhesive used between the die and leadframe. The component is otherwise considered Pb-Free (RoHS compatible) as defined above.
Green (RoHS & no Sb/Br): TI defines "Green" to mean Pb-Free (RoHS compatible), and free of Bromine (Br) and Antimony (Sb) based flame retardants (Br or Sb do not exceed 0.1% by weight in homogeneous material)

[3] MSL, Peak Temp. -- The Moisture Sensitivity Level rating according to the JEDEC industry standard classifications, and peak solder temperature.

Important Information and Disclaimer: The information provided on this page represents TI's knowledge and belief as of the date that it is provided. TI bases its knowledge and belief on information provided by third parties, and makes no representation or warranty as to the accuracy of such information. Efforts are underway to better integrate information from third parties. TI has taken and continues to take reasonable steps to provide representative and accurate information but may not have conducted destructive testing or chemical analysis on incoming materials and chemicals. TI and TI suppliers consider certain information to be proprietary, and thus CAS numbers and other limited information may not be available for release.

In no event shall TI's liability arising out of such information exceed the total purchase price of the TI part(s) at issue in this document sold by TI to Customer on an annual basis.

D (R–PDSO–G14) PLASTIC SMALL OUTLINE

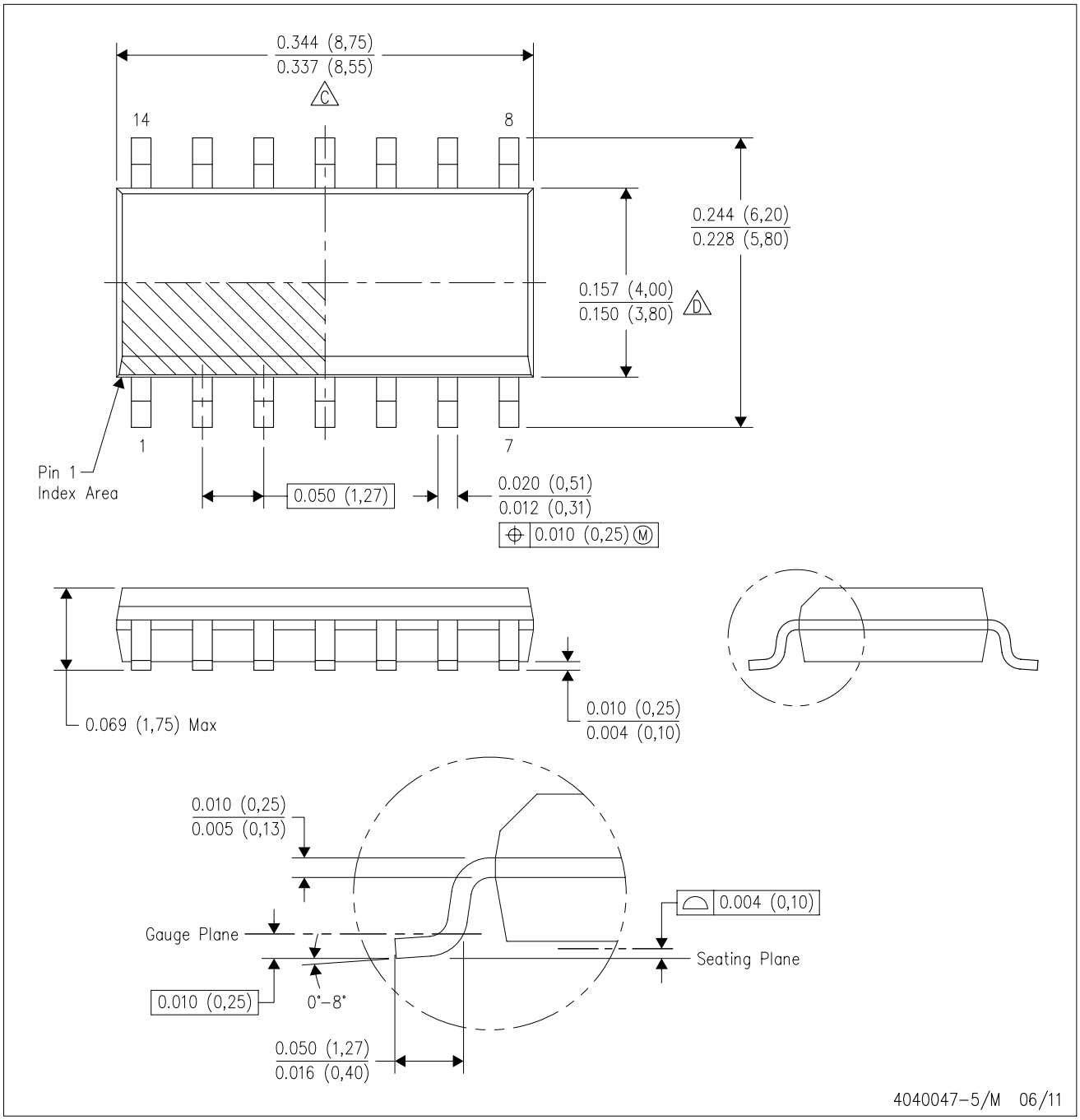

NOTES:
A. All linear dimensions are in inches (millimeters).
B. This drawing is subject to change without notice.
C. Body length does not include mold flash, protrusions, or gate burrs. Mold flash, protrusions, or gate burrs shall not exceed 0.006 (0,15) each side.
D. Body width does not include interlead flash. Interlead flash shall not exceed 0.017 (0,43) each side.
E. Reference JEDEC MS–012 variation AB.

DB (R-PDSO-G)** **PLASTIC SMALL-OUTLINE**

28 PINS SHOWN

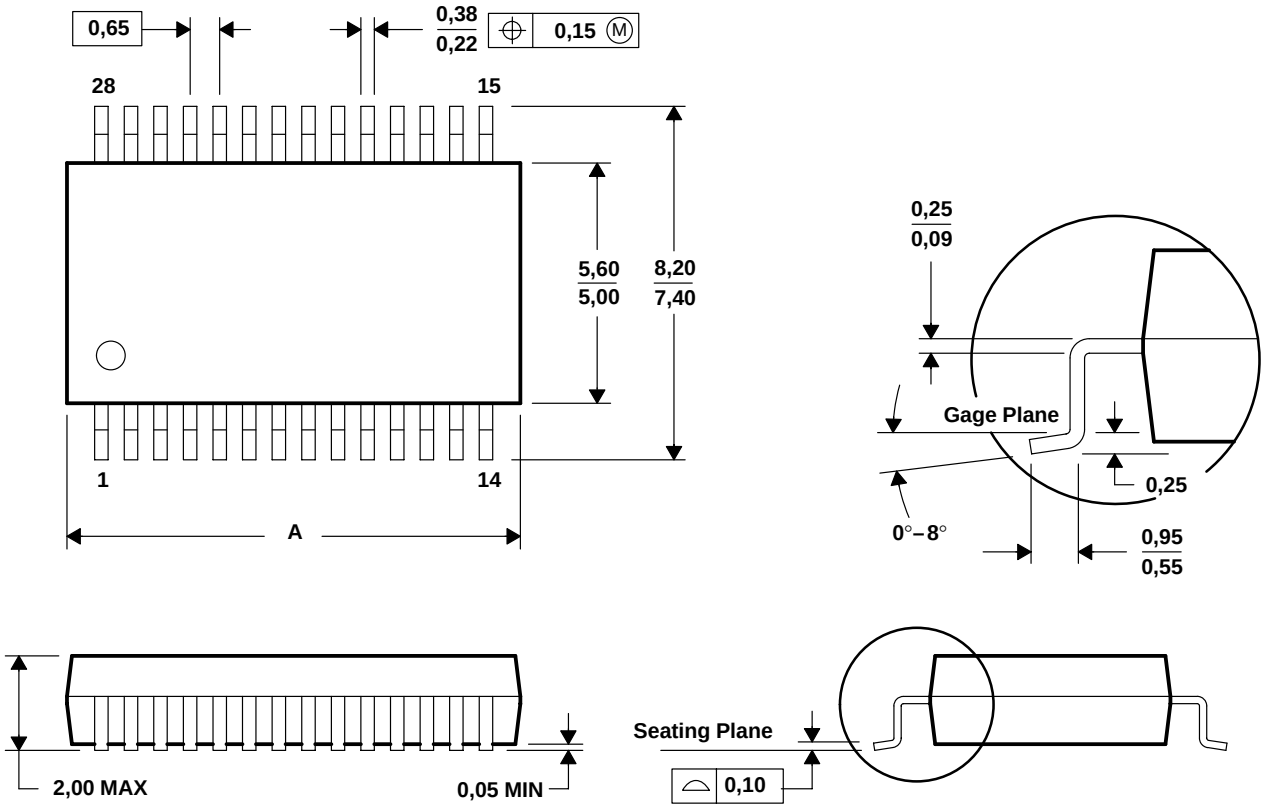

DIM \ PINS **	14	16	20	24	28	30	38
A MAX	6,50	6,50	7,50	8,50	10,50	10,50	12,90
A MIN	5,90	5,90	6,90	7,90	9,90	9,90	12,30

4040065 /E 12/01

NOTES: A. All linear dimensions are in millimeters.
B. This drawing is subject to change without notice.
C. Body dimensions do not include mold flash or protrusion not to exceed 0,15.
D. Falls within JEDEC MO-150

IMPORTANT NOTICE

Texas Instruments Incorporated and its subsidiaries (TI) reserve the right to make corrections, enhancements, improvements and other changes to its semiconductor products and services per JESD46, latest issue, and to discontinue any product or service per JESD48, latest issue. Buyers should obtain the latest relevant information before placing orders and should verify that such information is current and complete. All semiconductor products (also referred to herein as “components”) are sold subject to TI’s terms and conditions of sale supplied at the time of order acknowledgment.

TI warrants performance of its components to the specifications applicable at the time of sale, in accordance with the warranty in TI’s terms and conditions of sale of semiconductor products. Testing and other quality control techniques are used to the extent TI deems necessary to support this warranty. Except where mandated by applicable law, testing of all parameters of each component is not necessarily performed.

TI assumes no liability for applications assistance or the design of Buyers’ products. Buyers are responsible for their products and applications using TI components. To minimize the risks associated with Buyers’ products and applications, Buyers should provide adequate design and operating safeguards.

TI does not warrant or represent that any license, either express or implied, is granted under any patent right, copyright, mask work right, or other intellectual property right relating to any combination, machine, or process in which TI components or services are used. Information published by TI regarding third-party products or services does not constitute a license to use such products or services or a warranty or endorsement thereof. Use of such information may require a license from a third party under the patents or other intellectual property of the third party, or a license from TI under the patents or other intellectual property of TI.

Reproduction of significant portions of TI information in TI data books or data sheets is permissible only if reproduction is without alteration and is accompanied by all associated warranties, conditions, limitations, and notices. TI is not responsible or liable for such altered documentation. Information of third parties may be subject to additional restrictions.

Resale of TI components or services with statements different from or beyond the parameters stated by TI for that component or service voids all express and any implied warranties for the associated TI component or service and is an unfair and deceptive business practice. TI is not responsible or liable for any such statements.

Buyer acknowledges and agrees that it is solely responsible for compliance with all legal, regulatory and safety-related requirements concerning its products, and any use of TI components in its applications, notwithstanding any applications-related information or support that may be provided by TI. Buyer represents and agrees that it has all the necessary expertise to create and implement safeguards which anticipate dangerous consequences of failures, monitor failures and their consequences, lessen the likelihood of failures that might cause harm and take appropriate remedial actions. Buyer will fully indemnify TI and its representatives against any damages arising out of the use of any TI components in safety-critical applications.

In some cases, TI components may be promoted specifically to facilitate safety-related applications. With such components, TI’s goal is to help enable customers to design and create their own end-product solutions that meet applicable functional safety standards and requirements. Nonetheless, such components are subject to these terms.

No TI components are authorized for use in FDA Class III (or similar life-critical medical equipment) unless authorized officers of the parties have executed a special agreement specifically governing such use.

Only those TI components which TI has specifically designated as military grade or “enhanced plastic” are designed and intended for use in military/aerospace applications or environments. Buyer acknowledges and agrees that any military or aerospace use of TI components which have ***not*** been so designated is solely at the Buyer's risk, and that Buyer is solely responsible for compliance with all legal and regulatory requirements in connection with such use.

TI has specifically designated certain components as meeting ISO/TS16949 requirements, mainly for automotive use. In any case of use of non-designated products, TI will not be responsible for any failure to meet ISO/TS16949.

Products		**Applications**	
Audio	www.ti.com/audio	Automotive and Transportation	www.ti.com/automotive
Amplifiers	amplifier.ti.com	Communications and Telecom	www.ti.com/communications
Data Converters	dataconverter.ti.com	Computers and Peripherals	www.ti.com/computers
DLP® Products	www.dlp.com	Consumer Electronics	www.ti.com/consumer-apps
DSP	dsp.ti.com	Energy and Lighting	www.ti.com/energy
Clocks and Timers	www.ti.com/clocks	Industrial	www.ti.com/industrial
Interface	interface.ti.com	Medical	www.ti.com/medical
Logic	logic.ti.com	Security	www.ti.com/security
Power Mgmt	power.ti.com	Space, Avionics and Defense	www.ti.com/space-avionics-defense
Microcontrollers	microcontroller.ti.com	Video and Imaging	www.ti.com/video
RFID	www.ti-rfid.com		
OMAP Applications Processors	www.ti.com/omap	**TI E2E Community**	e2e.ti.com
Wireless Connectivity	www.ti.com/wirelessconnectivity		

Mailing Address: Texas Instruments, Post Office Box 655303, Dallas, Texas 75265
Copyright © 2012, Texas Instruments Incorporated