# Universal Serial Bus Hot Swap Power Controller

## FEATURES

- Support Four 5V Peripherals and One USB 3.3V Controller
- Separate Power Enables
- 650mA Current Limiting per Channel
- Separate Open Drain Fault Indicator for Each Channel
- 3.3V Output for USB Controller
- Available in 20 Pin DIP

## DESCRIPTION

The UCC39811 Hot Swap Power Controller is designed to provide a self powered USB hub with a local 3.3V regulated voltage and four 5V regulated voltages for USB ports. Each of the 5V output ports is individually enabled for optimal port control. Each port also provides an overcurrent fault signal indicating that the port has exceeded a 650mA current limit. The 3.3V linear regulator is used to power the local USB microcontroller. This regulator is protected with a 100mA current limit and has a logic level enable input.

The UCC39811 can be configured to provide USB port power from a loosely regulated voltage such as a Filament voltage internal to a monitor. Pre-regulation is provided by an internal linear regulator controller and one external logic level N-channel MOSFET. The UCC39811 can also be configured without using the pre-regulator stage by connecting the VREG pins to a regulated 5.5V 2A source.

The UCC39811 comes in a 20-pin DIP package and is protected by internal over-temperature shutdown mechanism, which disables the outputs should the internal junction temperature exceed 150°C.

## APPLICATION AND BLOCK DIAGRAM

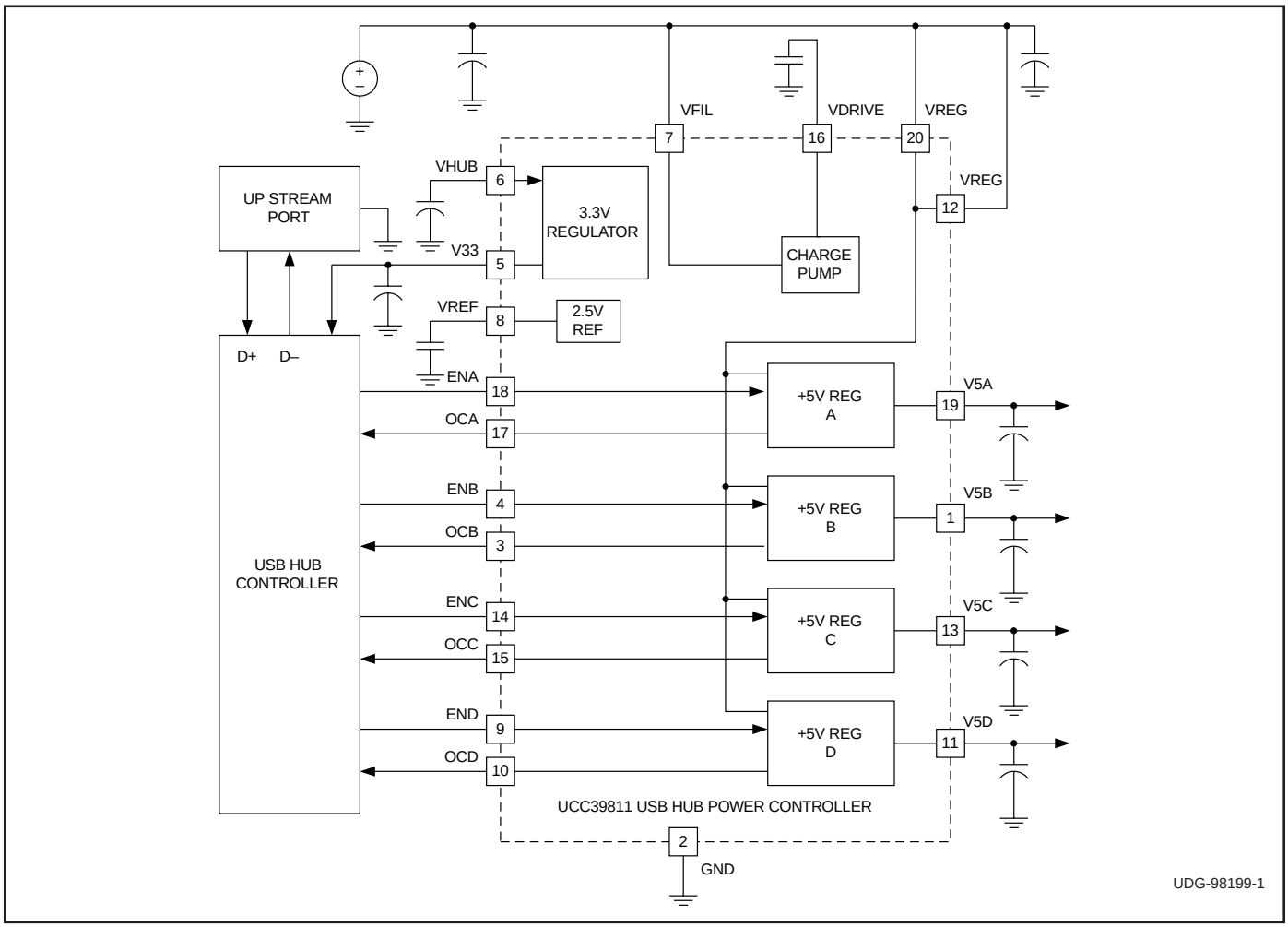

## ABSOLUTE MAXIMUM RATINGS

VFIL . . . . . 9V
VHUB Supply Voltage . . . . . 9V
Logic Inputs (ENA-D, ENHUB)
  Maximum Forced Voltage . . . . . –0.3V to 7V
  Maximum Forced Current . . . . . ±1mA
V33
  Maximum Forced Voltage. . . . . 5V
  Maximum Current . . . . . 200mA
V5A-D
  Maximum Voltage. . . . . 9V
  Maximum Current . . . . . 900mA
Storage Temperature . . . . . –65°C to +150°C
Junction Temperature. . . . . –55°C to +150°C
Lead Temperature (Soldering, 10 sec.) . . . . . +300°C

*Unless otherwise indicated, voltages are reference to ground. Pulsed is defined as a less than 10% duty cycle with a maximum duration of 500µS. Currents are positive into, negative out of the specified terminal. All voltages are with respect to ground. Consult Packaging Section of Databook for thermal limitations and considerations of packages.*

## CONNECTION DIAGRAM

**DIP 20 (Top View)**
**N Package**

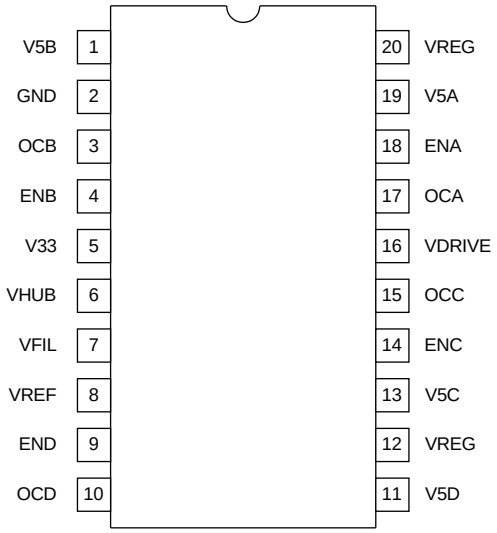


## ELECTRICAL CHARACTERISTICS

Unless otherwise specified, $T_J$ = 0°C to 125°C for the UCC39811. VFIL = 6.5V, VHUB = 5V. $T_A = T_J$.

| PARAMETER | TEST CONDITIONS | MIN | TYP | MAX | UNITS |
|---|---|---|---|---|---|
| **Input Supply Currents** | | | | | |
| VHUB Supply Current | No External Load on V33 | | 1 | 3 | mA |
| VFIL Supply Current | | | 1 | 3 | mA |
| **Reference** | | | | | |
| VREF Voltage | Over Temperature | 2.35 | 2.5 | 2.65 | V |
| Line Regulation | VHUB = 4.5V to 9V | | 3 | 10 | mV |
| 3.3V Regulator | | | | | |
| V33 Voltage | $T_J$ = 25°C, $I_{LOAD}$ = 10mA | 3.2 | 3.3 | 3.4 | V |
| | 0mA to 100mA, 0°C to 125°C, VHUB = 4.5V to 9V | 3.165 | 3.3 | 3.435 | V |
| Short Circuit Current Limit | VHUB = 6V, Output shorted to Ground | 100 | 120 | 150 | mA |
| **Pre-Regulator** | | | | | |
| VREG Voltage | 0A to 2A, 0°C to 125°C, VFIL = 6V to 9V | 5.25 | 5.5 | 5.7 | V |
| **5V Regulator** | | | | | |
| V5A-D Voltage | $T_J$ = 25°C, $I_{LOAD}$ = 250mA, $V_{REG}$ = 5.5V | 4.85 | 5 | 5.15 | V |
| | 0mA to 500mA, 0°C to 125°C | 4.8 | 5 | 5.2 | V |
| Short Circuit Current Limit | VREG = 5.5V, Output Shorted to Ground | 650 | 750 | 900 | mA |
| **Charge Pump** | | | | | |
| Quiescent Output Voltage | $T_J$ = 25°C, VFIL = 6V, ENA-D = 5V, ENHUB = 5V | 11 | 11.45 | 12 | V |
| | 0°C to 125°C, VFIL = 6V | 10.5 | 11.45 | 12 | V |
| Output Impedance | | | 9 | 15 | kΩ |
| **Enable Inputs** | | | | | |
| ENA-D Inputs - Guaranteed Low | | | | 0.7 | V |
| ENA-D Inputs - Guaranteed High | | 3 | | | V |
| ENHUB Input - Guaranteed Low | | | | 0.7 | V |
| ENHUB Input - Guaranteed High | | 3 | | | V |
| **Overcurrent Signals** | | | | | |
| Active Sink Current | $I_{OCX}$ =100µA | | 140 | 500 | mV |

## PIN DESCRIPTIONS

**ENA-D:** Separate enables pins for each of the four 5V supplies.

**ENHUB:** Enables the 3.3V output V33. Pulling this pin low disables V33.

**GATE:** Gate drive for an external NMOS used to regulate the 5.5V VREG supply. Minimum available drive is 11V.

**GND:** All 6 GND pins must be tied to the system ground. In addition to serving as electrical conductors, these 6 pins are heat sinks. Refer to the Packaging Device Temperature Management guide in the Packaging section of the Unitrode Databook.

**OCA-D:** Open drain overcurrent indicator. OCA-D can be wire OR'ed by the user to create a single overcurrent indicator.

**V5A-D:** 5V regulated output with enable, 500mA (minimum) current limit, and overcurrent indicator.

**V33:** 3.3V regulator output. Enable when ENHUB is high. Current limit is 100mA minimum.

**VDRIVE:** Internal charge pump voltage is brought out for external decoupling. Nominal voltage is between 11V and 13V. No external loading permitting. Decouple with at least 0.001µF capacitor.

**VFIL:** Bias supply for all four of the 5V regulators. VFIL voltage must be between 5.5V and 9V Can be tied to VRE.

**VHUB:** Supply for the 3.3V USB controller power supply and bandgap reference.

**VREF:** Internal 2.5V reference is brought out for external decoupling only. Decouple with 0.01µF capacitor.

**VREG:** Regulated to 5.5V by means of an external NMOS. Two pins supply up to a total of 2.5A to the four 5V bus voltages (V5A, V5B, V5C, V5D).

UNITRODE CORPORATION
7 CONTINENTAL BLVD. • MERRIMACK, NH 03054
TEL. (603) 424-2410 • FAX (603) 424-3460

**IMPORTANT NOTICE**

Texas Instruments and its subsidiaries (TI) reserve the right to make changes to their products or to discontinue any product or service without notice, and advise customers to obtain the latest version of relevant information to verify, before placing orders, that information being relied on is current and complete. All products are sold subject to the terms and conditions of sale supplied at the time of order acknowledgement, including those pertaining to warranty, patent infringement, and limitation of liability.

TI warrants performance of its semiconductor products to the specifications applicable at the time of sale in accordance with TI's standard warranty. Testing and other quality control techniques are utilized to the extent TI deems necessary to support this warranty. Specific testing of all parameters of each device is not necessarily performed, except those mandated by government requirements.

CERTAIN APPLICATIONS USING SEMICONDUCTOR PRODUCTS MAY INVOLVE POTENTIAL RISKS OF DEATH, PERSONAL INJURY, OR SEVERE PROPERTY OR ENVIRONMENTAL DAMAGE ("CRITICAL APPLICATIONS"). TI SEMICONDUCTOR PRODUCTS ARE NOT DESIGNED, AUTHORIZED, OR WARRANTED TO BE SUITABLE FOR USE IN LIFE-SUPPORT DEVICES OR SYSTEMS OR OTHER CRITICAL APPLICATIONS. INCLUSION OF TI PRODUCTS IN SUCH APPLICATIONS IS UNDERSTOOD TO BE FULLY AT THE CUSTOMER'S RISK.

In order to minimize risks associated with the customer's applications, adequate design and operating safeguards must be provided by the customer to minimize inherent or procedural hazards.

TI assumes no liability for applications assistance or customer product design. TI does not warrant or represent that any license, either express or implied, is granted under any patent right, copyright, mask work right, or other intellectual property right of TI covering or relating to any combination, machine, or process in which such semiconductor products or services might be or are used. TI's publication of information regarding any third party's products or services does not constitute TI's approval, warranty or endorsement thereof.

Copyright © 1999, Texas Instruments Incorporated