Current-Limited, Power-Distribution Switches

Check for Samples: TPS20xxC, TPS20xxC-2

FEATURES

- **Single Power Switch Family**
- **Pin for Pin with Existing *TI Switch Portfolio***
- **Rated currents of 0.5 A, 1 A, 1.5 A, 2 A**
- **±20% Accurate, Fixed, Constant Current Limit**
- **Fast Over-Current Response – 2 µs**
- **Deglitched Fault Reporting**
- **Selected Parts with (TPS20xxC) and without (TPS20xxC-2) Output Discharge**
- **Reverse Current Blocking**
- **Built-in Softstart**
- **Ambient Temperature Range: –40°C to 85°C**
- **UL Listed and CB-File No. E169910 (See Table 1)**

APPLICATIONS

- **USB Ports/Hubs, Laptops, Desktops**
- **High-Definition Digital TVs**
- **Set Top Boxes**
- **Short-Circuit Protection**

DESCRIPTION

The TPS20xxC and TPS20xxC-2 power-distribution switch family is intended for applications such as USB where heavy capacitive loads and short-circuits are likely to be encountered. This family offers multiple devices with fixed current-limit thresholds for applications between 0.5 A and 2 A.

The TPS20xxC and TPS20xxC-2 family limits the output current to a safe level by operating in a constant-current mode when the output load exceeds the current-limit threshold. This provides a predictable fault current under all conditions. The fast overload response time eases the burden on the main 5 V supply to provide regulated power when the output is shorted. The power-switch rise and fall times are controlled to minimize current surges during turn-on and turn-off.

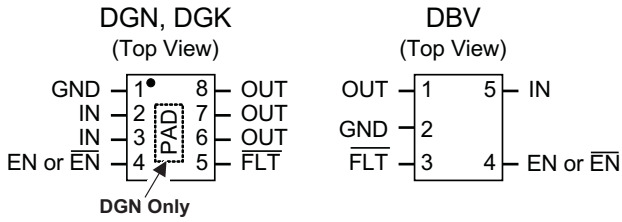

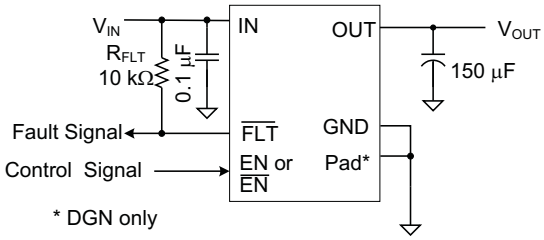

Figure 1. Typical Application

Table 1. DEVICES(1)

MAXIMUM OPERATING CURRENT	DEVICES	STATUS		
		MSOP-8 (PowerPad™)	SOT23-5	MSOP-8
0.5	TPS2041C and 51C	—	Active and Active(2)	—
1	TPS2061C and 65C	Active and Active(2)	Active and Active(2)	—
1	TPS2065C-2	Active	Active	—
1.5	TPS2068C and 69C	Active and Active(2)	— and Active	—
1.5	TPS2069C-2	Active	—	—
2	TPS2000C and 01C	Active(2) and Active(2)	—	Active(2) and Active(2)

(1) For more details, see the DEVICE INFORMATION table.
(2) UL listed and CB complete.

Please be aware that an important notice concerning availability, standard warranty, and use in critical applications of Texas Instruments semiconductor products and disclaimers thereto appears at the end of this data sheet.
PowerPad is a trademark of Texas Instruments.

PRODUCTION DATA information is current as of publication date. Products conform to specifications per the terms of the Texas Instruments standard warranty. Production processing does not necessarily include testing of all parameters.

Copyright © 2011–2012, Texas Instruments Incorporated

This integrated circuit can be damaged by ESD. Texas Instruments recommends that all integrated circuits be handled with appropriate precautions. Failure to observe proper handling and installation procedures can cause damage.

ESD damage can range from subtle performance degradation to complete device failure. Precision integrated circuits may be more susceptible to damage because very small parametric changes could cause the device not to meet its published specifications.

DEVICE INFORMATION(1)

MAXIMUM OPERATING CURRENT	OUTPUT DISCHARGE	ENABLE	BASE PART NUMBER	PACKAGED DEVICE AND MARKING(2)		
				MSOP-8 (DGN) PowerPAD™	SOT23-5 (DBV)	MSOP-8 (DGK)
0.5	Y	Low	TPS2041C	–	PYJI	–
0.5	Y	High	TPS2051C	–	VBYQ	–
1	Y	Low	TPS2061C	PXMI	PXLI	–
1	Y	High	TPS2065C	VCAQ	VCAQ	–
1	N	High	TPS2065C-2	PYRI	PYQI	–
1.5	Y	Low	TPS2068C	PXNI	–	–
1.5	Y	High	TPS2069C	VBUQ	PXKI	–
1.5	N	High	TPS2069C-2	PYSI	–	–
2	Y	Low	TPS2000C	BCMS	–	PXFI
2	Y	High	TPS2001C	VBWQ	–	PXGI

(1) For the most current packaging and ordering information, see the Package Option Addendum at the end of this document, or see the TI website at www.ti.com.
(2) "-" indicates the device is not available in this package.

ABSOLUTE MAXIMUM RATINGS(1)(2)

		VALUE		UNIT
		MIN	MAX	
Voltage range on IN, OUT, EN or $\overline{EN}$, $\overline{FLT}$ (3)		–0.3	6	V
Voltage range from IN to OUT		–6	6	V
Maximum junction temperature, T_J		Internally Limited		
Electrostatic Discharge	HBM	2		kV
	CDM	500		V
	IEC 61000-4-2, Contact / Air (4)	8	15	kV

(1) Absolute maximum ratings apply over recommended junction temperature range.
(2) Voltages are with respect to GND unless otherwise noted.
(3) See the Input and Output Capacitance section.
(4) V_{OUT} was surged on a pcb with input and output bypassing per Figure 1 (except input capacitor was 22 µF) with no device failures.

THERMAL INFORMATION

THERMAL METRIC(1) (See DEVICE INFORMATION table.)		0.5 A or 1 A Rated	1.5 A or 2 A Rated	0.5 A or 1 A Rated	1.5 A or 2 A Rated	2 A Rated	UNITS
		DBV	DBV	DGN	DGN	DGK	
		5 PINS	5 PINS	8 PINS	8 PINS	8 PINS	
θ_{JA}	Junction-to-ambient thermal resistance	224.9	220.4	72.1	67.1	205.5	°C/W
θ_{JCtop}	Junction-to-case (top) thermal resistance	95.2	89.7	87.3	80.8	94.3	
θ_{JB}	Junction-to-board thermal resistance	51.4	46.9	42.2	37.2	126.9	
ψ_{JT}	Junction-to-top characterization parameter	6.6	5.2	7.3	5.6	24.7	
ψ_{JB}	Junction-to-board characterization parameter	50.3	46.2	42.0	36.9	125.2	
θ_{JCbot}	Junction-to-case (bottom) thermal resistance	N/A	N/A	39.2	32.1	N/A	
θ_{JA}Custom	See the Power DIssipation and Junction Temperature section	139.3	134.9	66.5	61.3	110.3	

(1) For more information about traditional and new thermal metrics, see the *IC Package Thermal Metrics* application report, SPRA953.

Copyright © 2011–2012, Texas Instruments Incorporated

RECOMMENDED OPERATING CONDITIONS

			MIN	NOM	MAX	UNIT
V_{IN}	Input voltage, IN		4.5		5.5	V
V_{EN}	Input voltage, EN or $\overline{EN}$		0		5.5	V
V_{IH}	High-level input voltage, EN or $\overline{EN}$		2			V
V_{IL}	Low-level input voltage, EN or $\overline{EN}$				0.7	V
I_{OUT}	Continuous output current, OUT(1)	TPS2041C and TPS2051C			0.5	A
		TPS2061C, TPS2065C and TPS2065C-2			1	
		TPS2068C, TPS2069C and TPS2069C-2			1.5	
		TPS2000C and TPS2001C			2	
T_J	Operating junction temperature		–40		125	°C
$I_{\overline{FLT}}$	Sink current into $\overline{FLT}$		0		5	mA

(1) Some package and current rating may request an ambient temperature derating of 85°C.

ELECTRICAL CHARACTERISTICS: $T_J = T_A = 25°C$(1)

Unless otherwise noted:, V_{IN} = 5 V, V_{EN} = V_{IN} or $V_{\overline{EN}}$ = GND, I_{OUT} = 0 A. See the 'Device Information' table for the rated current of each part number. Parametrics over a wider operational range are shown in the second 'Electrical Characteristics' table.

PARAMETER		TEST CONDITIONS(1)		MIN	TYP	MAX	UNIT
POWER SWITCH							
$R_{DS(on)}$	Input – output resistance	0.5 A rated output, 25°C	DBV		97	110	mΩ
		0.5 A rated output, –40°C ≤ (T_J , T_A) ≤ 85°C	DBV		96	130	mΩ
		1 A rated output, 25°C	DBV		96	110	mΩ
			DGN		86	100	
		1 A rated output, –40°C ≤ (T_J , T_A) ≤ 85°C	DBV		96	130	mΩ
			DGN		86	120	
		1.5 A rated output, 25°C	DBV		76	91	mΩ
			DGN		69	84	mΩ
		1.5 A rated output, –40°C ≤ (T_J , T_A) ≤ 85°C	DBV		76	106	mΩ
			DGN		69	98	mΩ
		2 A rated output, 25°C	DGN, DGK		72	84	mΩ
		2 A rated output, –40°C ≤ (T_J , T_A) ≤ 85°C	DGN, DGK		72	98	mΩ
CURRENT LIMIT							
I_{OS}(2)	Current-limit, See Figure 7	0.5A rated output	TPS20xxC	0.67	0.85	1.01	A
		1 A rated output	TPS20xxC	1.3	1.55	1.8	
			TPS20xxC-2	1.18	1.53	1.88	
		1.5 A rated output	TPS20xxC	1.7	2.15	2.5	
			TPS20xxC-2	1.71	2.23	2.75	
		2 A rated output	TPS20xxC	2.35	2.9	3.4	
SUPPLY CURRENT							
I_{SD}	Supply current, switch disabled	I_{OUT} = 0 A			0.01	1	µA
		–40°C ≤ (T_J , T_A) ≤ 85°C, V_{IN} = 5.5 V, I_{OUT} = 0 A				2	
I_{SE}	Supply current, switch enabled	I_{OUT} = 0 A			60	70	µA
		–40°C ≤ (T_J , T_A) ≤ 85°C, V_{IN} = 5.5 V, I_{OUT} = 0 A				85	
I_{lkg}	Leakage current	V_{OUT} = 0 V, V_{IN} = 5 V, disabled, measure I_{VIN}	TPS20xxC-2		0.05	1	µA
		–40°C ≤ (T_J , T_A) ≤ 85°C, V_{OUT} = 0 V, V_{IN} = 5 V, disabled, measure I_{VIN}				2	

(1) Pulsed testing techniques maintain junction temperature approximately equal to ambient temperature
(2) See CURRENT LIMIT section for explanation of this parameter.

Copyright © 2011–2012, Texas Instruments Incorporated

ELECTRICAL CHARACTERISTICS: $T_J = T_A = 25°C$[1] (continued)

Unless otherwise noted:, V_{IN} = 5 V, $V_{EN} = V_{IN}$ or $V_{\overline{EN}}$ = GND, I_{OUT} = 0 A. See the 'Device Information' table for the rated current of each part number. Parametrics over a wider operational range are shown in the second 'Electrical Characteristics' table.

PARAMETER		TEST CONDITIONS[1]		MIN	TYP	MAX	UNIT
I_{REV}	Reverse leakage current	V_{OUT} = 5 V, V_{IN} = 0 V, measure I_{VOUT}			0.1	1	µA
		–40°C ≤ (T_J , T_A) ≤ 85°C, V_{OUT} = 5 V, V_{IN} = 0 V, measure I_{VOUT}				5	
OUTPUT DISCHARGE							
R_{PD}	Output pull-down resistance[3]	$V_{IN} = V_{OUT}$ = 5 V, disabled	TPS20xxC	400	470	600	Ω

(3) These parameters are provided for reference only, and do not constitute part of TI's published device specifications for purposes of TI's product warranty.

ELECTRICAL CHARACTERISTICS: –40°C ≤ T_J ≤ 125°C

Unless otherwise noted:4.5 V ≤ V_{IN} ≤ 5.5 V, $V_{EN} = V_{IN}$ or $V_{\overline{EN}}$ = GND, I_{OUT} = 0 A, typical values are at 5 V and 25°C. See the DEVICE INFORMATION table for the rated current of each part number.

PARAMETER		TEST CONDITIONS[1]		MIN	TYP	MAX	UNIT
POWER SWITCH							
$R_{DS(ON)}$	Input – output resistance	0.5 A rated output	DBV		97	154	mΩ
		1 A rated output	DBV		96	154	mΩ
			DGN		86	140	
		1.5 A rated output	DBV		76	121	mΩ
			DGN		69	112	mΩ
		2 A rated output	DGN, DGK		72	112	mΩ
ENABLE INPUT (EN or $\overline{EN}$)							
	Threshold	Input rising		1	1.45	2	V
	Hysteresis			0.07	0.13	0.20	V
	Leakage current	(V_{EN} or $V_{\overline{EN}}$) = 0 V or 5.5 V		–1	0	1	µA
t_{ON}	Turnon time	V_{IN} = 5 V, C_L = 1 µF, R_L = 100 Ω, EN ↑ or $\overline{EN}$ ↓. See Figure 2, Figure 4, and Figure 5					ms
		0.5A / 1A Rated		1	1.4	1.8	
		1.5A / 2A Rated		1.2	1.7	2.2	
t_{OFF}	Turnoff time	V_{IN} = 5 V, C_L = 1 µF, R_L = 100 Ω, EN ↓ or $\overline{EN}$ ↑. See Figure 2, Figure 4, and Figure 5					ms
		0.5A and 1A Rated		1.3	1.65	2	
		1.5A / 2A Rated		1.7	2.1	2.5	
t_R	Rise time, output	C_L = 1 µF, R_L = 100 Ω, V_{IN} = 5 V. See Figure 3					ms
		0.5A / 1A Rated		0.4	0.55	0.7	
		1.5A / 2A Rated		0.5	0.7	1.0	
t_F	Fall time, output	C_L = 1 µF, R_L = 100 Ω, V_{IN} = 5 V. See Figure 3					ms
		0.5A / 1A Rated		0.25	0.35	0.45	
		1.5A / 2A Rated		0.3	0.43	0.55	
CURRENT LIMIT							
I_{OS}[2]	Current-limit, See Figure 10	0.5 A rated output	TPS20xxC	0.65	0.85	1.05	A
		1 A rated output	TPS20xxC	1.2	1.55	1.9	
			TPS20xxC-2	1.1	1.53	1.96	
		1.5 A rated output	TPS20xxC	1.6	2.15	2.7	
			TPS20xxC-2	1.6	2.23	2.86	
		2 A rated output	TPS20xxC	2.3	2.9	3.6	

(1) Pulsed testing techniques maintain junction temperature approximately equal to ambient temperature
(2) See CURRENT LIMIT section for explanation of this parameter.

Copyright © 2011–2012, Texas Instruments Incorporated

ELECTRICAL CHARACTERISTICS: –40°C ≤ T_J ≤ 125°C (continued)

Unless otherwise noted:4.5 V ≤ V_{IN} ≤ 5.5 V, V_{EN} = V_{IN} or $V_{\overline{EN}}$ = GND, I_{OUT} = 0 A, typical values are at 5 V and 25°C. See the DEVICE INFORMATION table for the rated current of each part number.

PARAMETER		TEST CONDITIONS(1)		MIN	TYP	MAX	UNIT
t_{IOS}	Short-circuit response time(3)	V_{IN} = 5 V (see Figure 7), One-half full load → R_{SHORT} = 50 mΩ, Measure from application to when current falls below 120% of final value			2		µs
SUPPLY CURRENT							
I_{SD}	Supply current, switch disabled	I_{OUT} = 0 A			0.01	10	µA
I_{SE}	Supply current, switch enabled	I_{OUT} = 0 A			65	90	µA
I_{lkg}	Leakage current	V_{OUT} = 0 V, V_{IN} = 5 V, disabled, measure I_{VIN}	TPS20XXC-2		0.05		µA
I_{REV}	Reverse leakage current	V_{OUT} = 5.5 V, V_{IN} = 0 V, measure I_{VOUT}			0.2	20	µA
UNDERVOLTAGE LOCKOUT							
V_{UVLO}	Rising threshold	V_{IN}↑		3.5	3.75	4	V
	Hysteresis(3)	V_{IN}↓			0.14		V
$\overline{FLT}$							
	Output low voltage, $\overline{FLT}$	$I_{\overline{FLT}}$ = 1 mA				0.2	V
	Off-state leakage	$V_{\overline{FLT}}$ = 5.5 V				1	µA
$t_{\overline{FLT}}$	$\overline{FLT}$ deglitch	$\overline{FLT}$ assertion or deassertion deglitch		6	9	12	ms
OUTPUT DISCHARGE							
R_{PD}	Output pull-down resistance	V_{IN} = 4 V, V_{OUT} = 5 V, disabled	TPS20XXC	350	560	1200	Ω
		V_{IN} = 5 V, V_{OUT} = 5 V, disabled	TPS20XXC	300	470	800	
THERMAL SHUTDOWN							
	Rising threshold (T_J)	In current limit		135			°C
		Not in current limit		155			
	Hysteresis (4)				20		

(3) These parameters are provided for reference only, and do not constitute part of TI's published device specifications for purposes of TI's product warranty.
(4) These parameters are provided for reference only, and do not constitute part of TI's published device specifications for purposes of TI's product warranty.

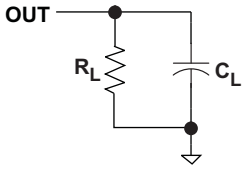

Figure 2. Output Rise / Fall Test Load

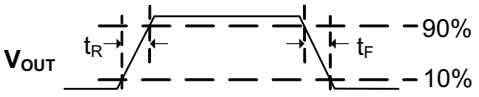

Figure 3. Power-On and Off Timing

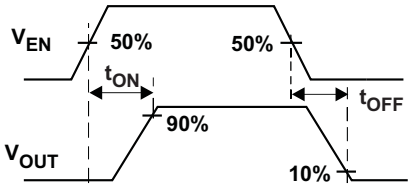

Figure 4. Enable Timing, Active High Enable

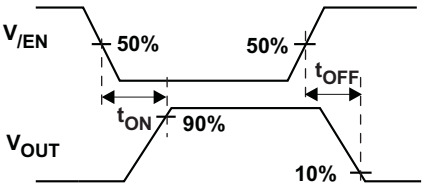

Figure 5. Enable Timing, Active Low Enable

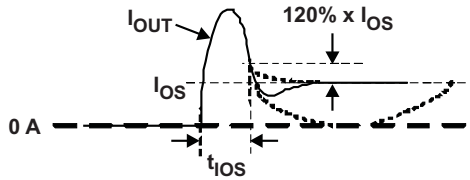

Figure 6. Output Short Circuit Parameters

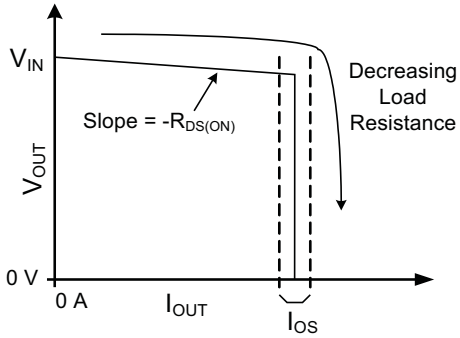

Figure 7. Output Characteristic Showing Current Limit

FUNCTIONAL BLOCK DIAGRAM

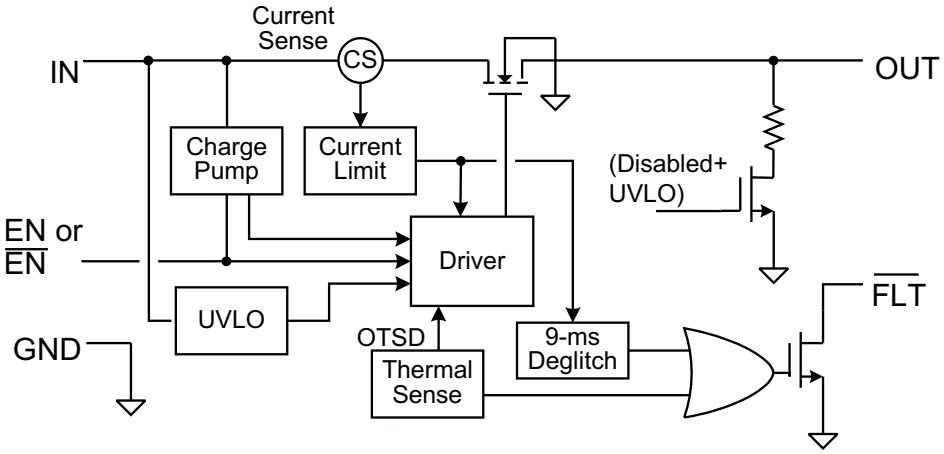

Figure 8. TPS20xxC Block Diagram

Copyright © 2011–2012, Texas Instruments Incorporated

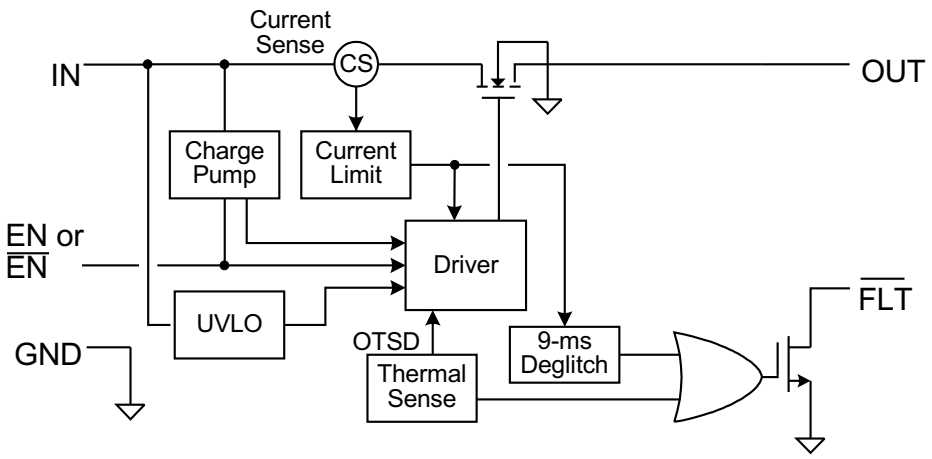

Figure 9. TPS20xxC-2 Block Diagram

DEVICE INFORMATION

PIN FUNCTIONS

NAME	PINS	DESCRIPTION
8-PIN PACKAGE		
EN or $\overline{EN}$	4	Enable input, logic high turns on power switch
GND	1	Ground connection
IN	2, 3	Input voltage and power-switch drain; connect a 0.1 µF or greater ceramic capacitor from IN to GND close to the IC
$\overline{FLT}$	5	Active-low open-drain output, asserted during over-current, or over-temperature conditions
OUT	6, 7, 8	Power-switch output, connect to load
PowerPAD (DGN ONLY)	PAD	Internally connected to GND. Connect PAD to GND plane as a heatsink for the best thermal performance. PAD may be left floating if desired. See POWER DISSIPATION AND JUNCTION TEMPERATURE section for guidance.
5-PIN PACKAGE		
EN or $\overline{EN}$	4	Enable input, logic high turns on power switch
GND	2	Ground connection
IN	5	Input voltage and power-switch drain; connect a 0.1 µF or greater ceramic capacitor from IN to GND close to the IC
$\overline{FLT}$	3	Active-low open-drain output, asserted during over-current, or over-temperature conditions
OUT	1	Power-switch output, connect to load.

Copyright © 2011–2012, Texas Instruments Incorporated

TYPICAL CHARACTERISTICS

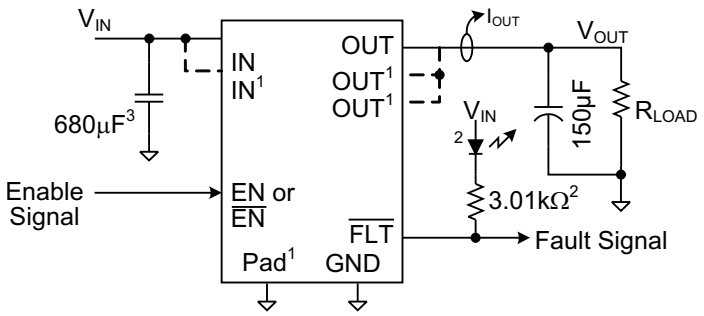

(1) Not every package has all pins
(2) These parts are for test purposes
(3) Helps with output shorting tests when external supply is used.

Figure 10. Test Circuit for System Operation in Typical Characteristics Section

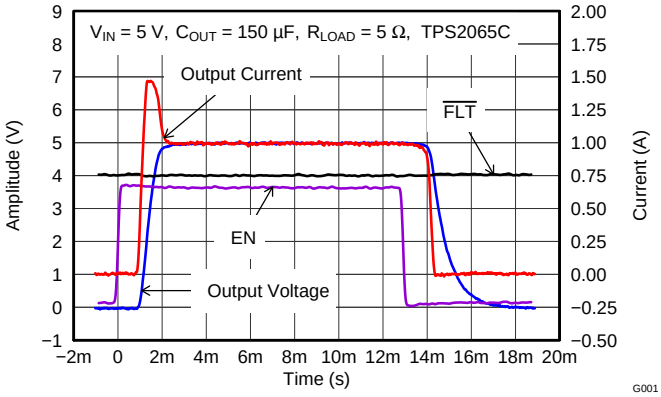

Figure 11. TPS2065C Output Rise / Fall 5Ω

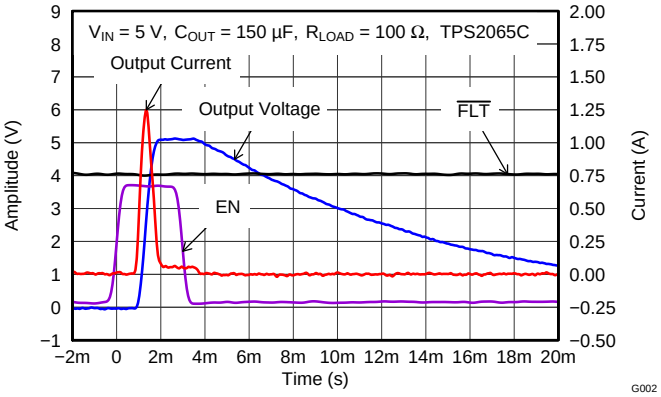

Figure 12. TPS2065C Output Rise / Fall 100Ω

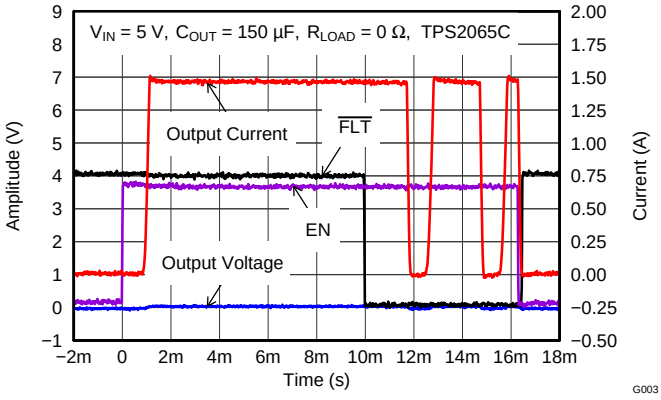

Figure 13. TPS2065C Enable into Output Short

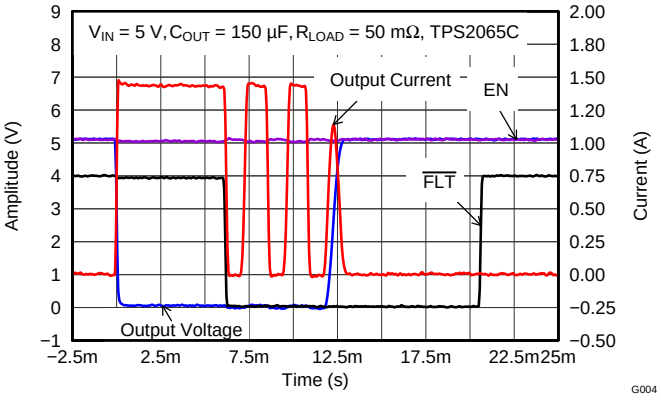

Figure 14. TPS2065C Pulsed Short Applied

Copyright © 2011–2012, Texas Instruments Incorporated

TYPICAL CHARACTERISTICS (continued)

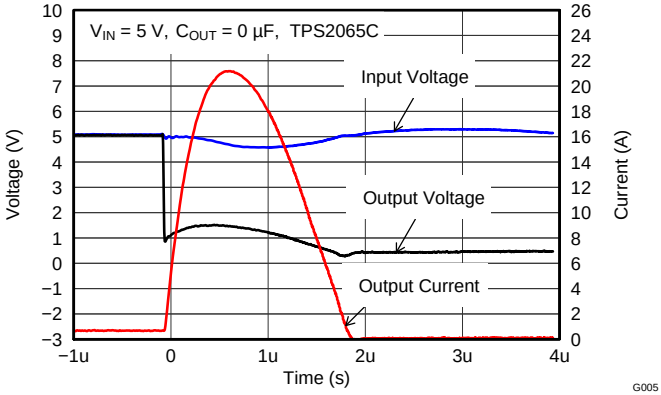

Figure 15. TPS2065C Short Applied

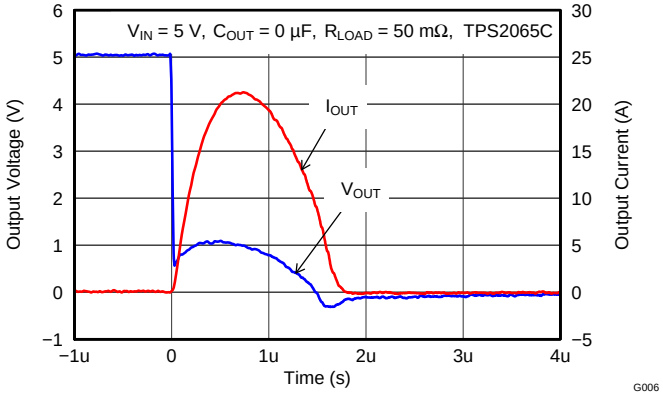

Figure 16. TPS2065C Pulsed 1.45-A Load

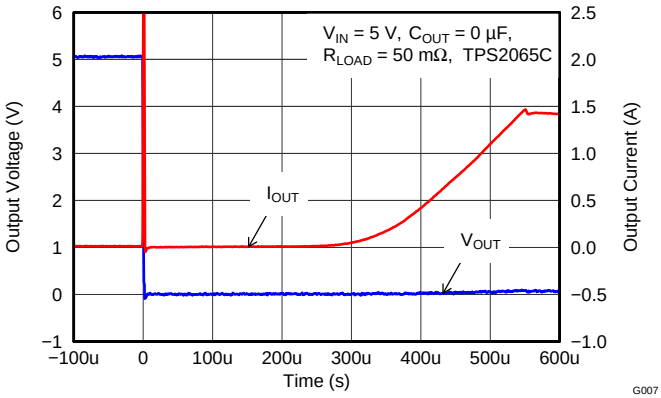

Figure 17. TPS2065C 50 mΩ Short Circuit

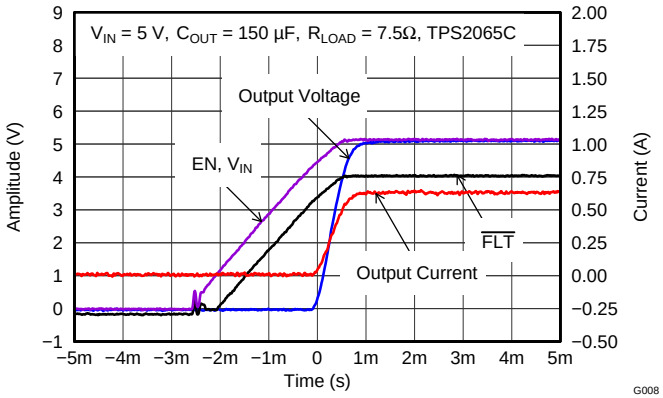

Figure 18. TPS2065C Power Up - Enabled

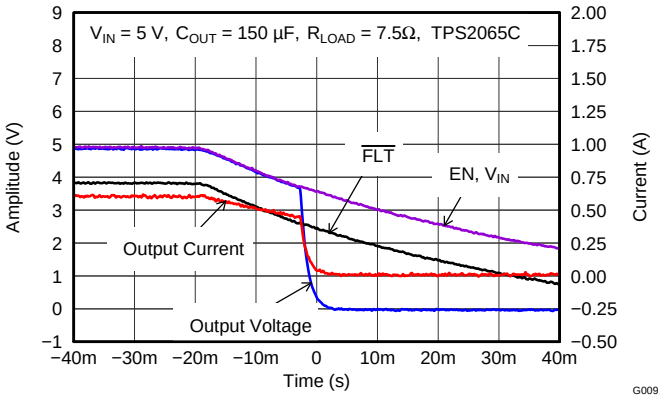

Figure 19. TPS2065C Power Down - Enabled

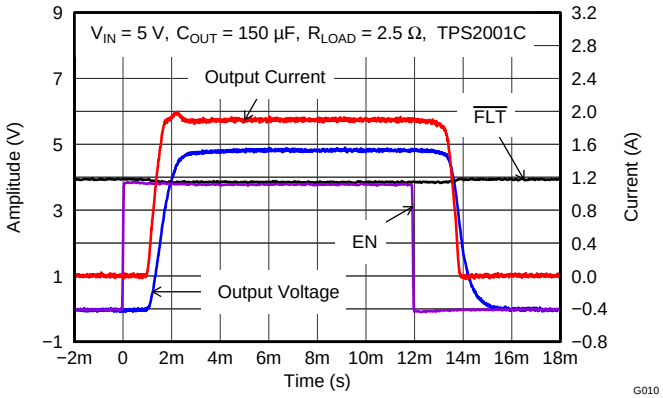

Figure 20. TPS2001C Turn ON into 2.5Ω

TYPICAL CHARACTERISTICS (continued)

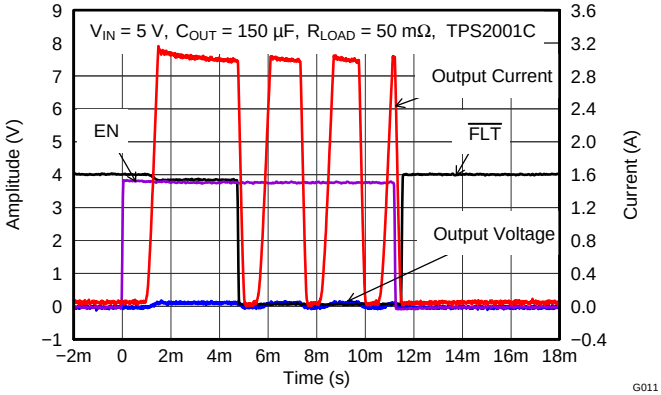

Figure 21. TPS2001C Enable into Short

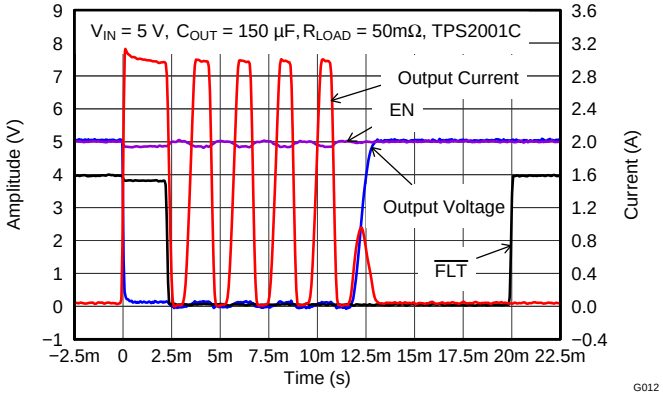

Figure 22. TPS2001C Pulsed Output Short

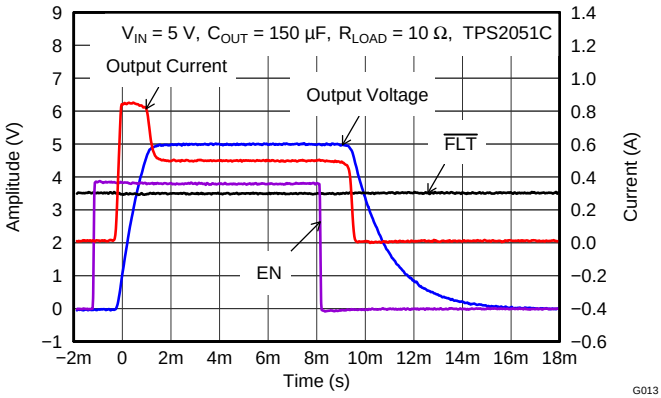

Figure 23. TPS2051C Turn ON into 10Ω

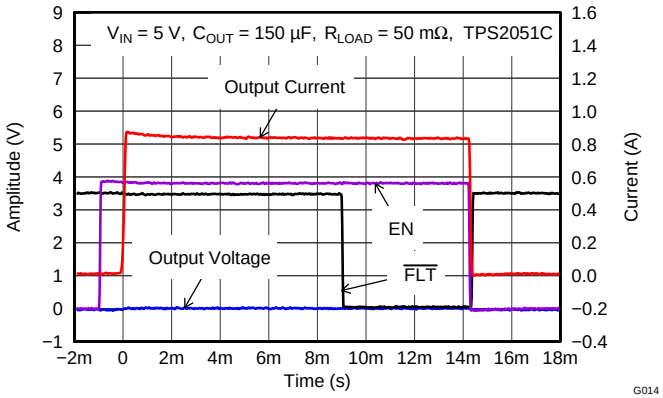

Figure 24. TPS2051C Enable into Short

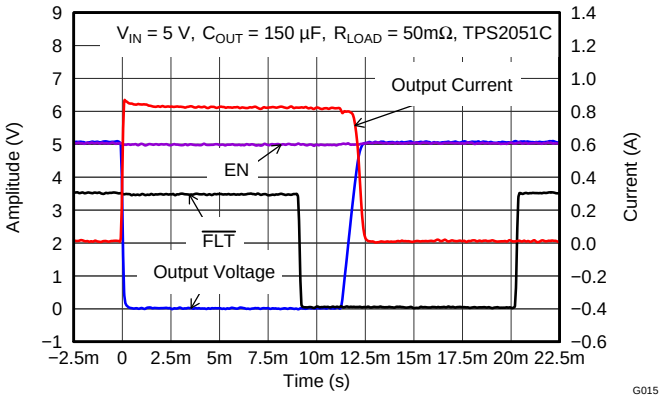

Figure 25. TPS2051C Pulsed Output Short

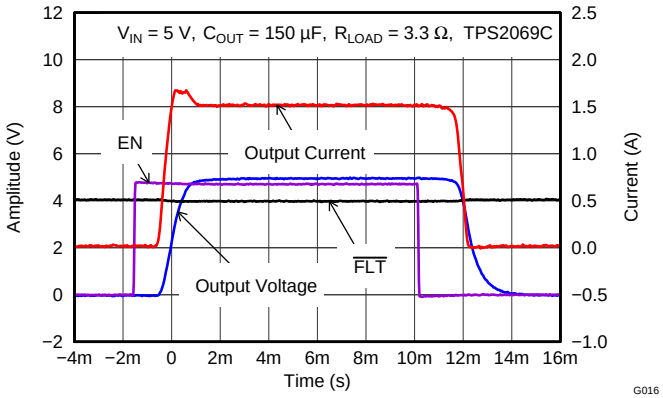

Figure 26. TPS2069C Turn ON into 3.3Ω

Copyright © 2011–2012, Texas Instruments Incorporated

TYPICAL CHARACTERISTICS (continued)

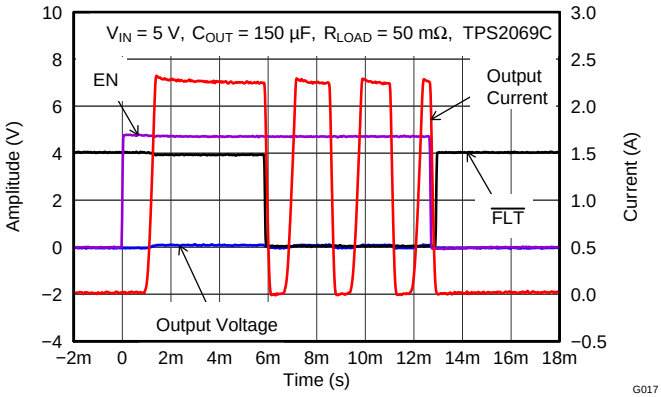

Figure 27. TPS2069C Enable into Short

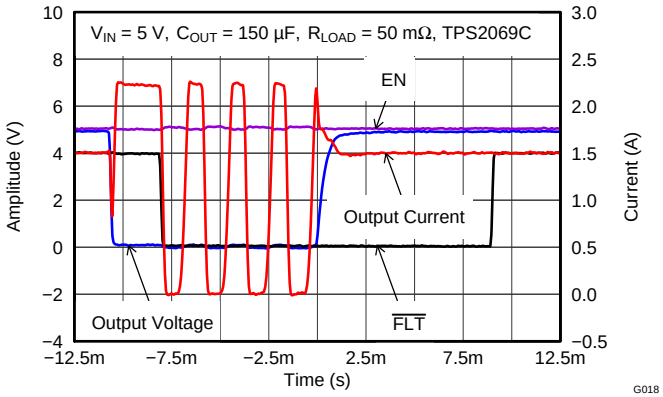

Figure 28. TPS2069C Pulsed Output Short

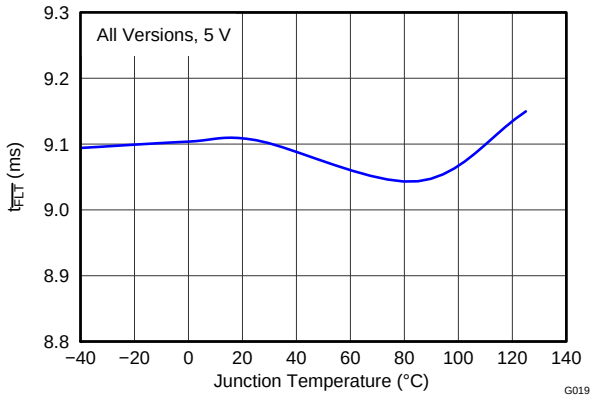

Figure 29. Deglitch Period ($t_{\overline{FLT}}$) vs Temperature

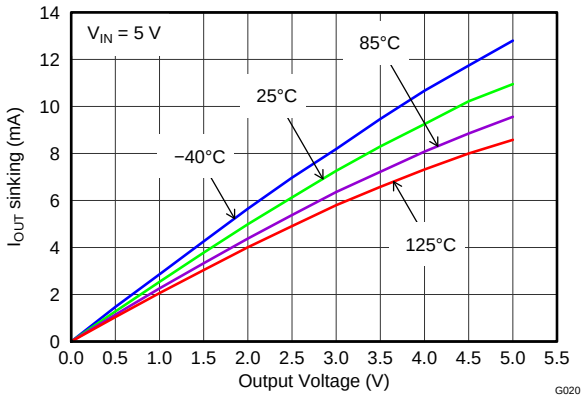

Figure 30. Output Discharge Current vs Output Voltage

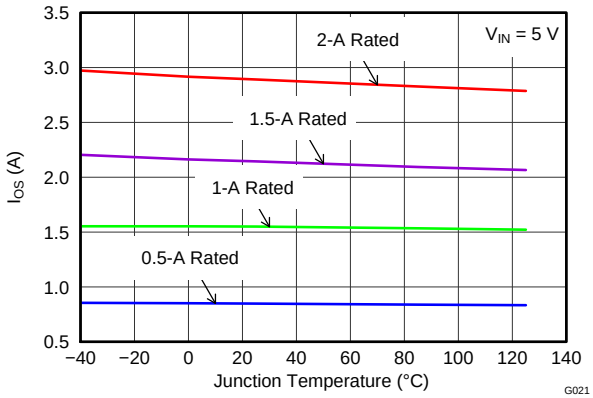

Figure 31. Short Circuit Current (I_{OS}) vs Temperature

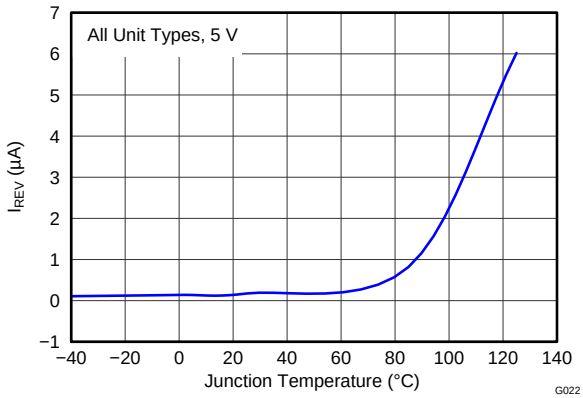

Figure 32. Reverse Leakage Current (I_{REV}) vs Temperature

TYPICAL CHARACTERISTICS (continued)

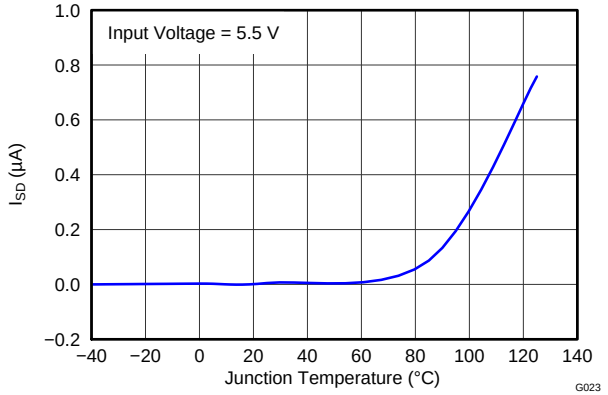

Figure 33. Disabled Supply Current (I_{SD}) vs Temperature

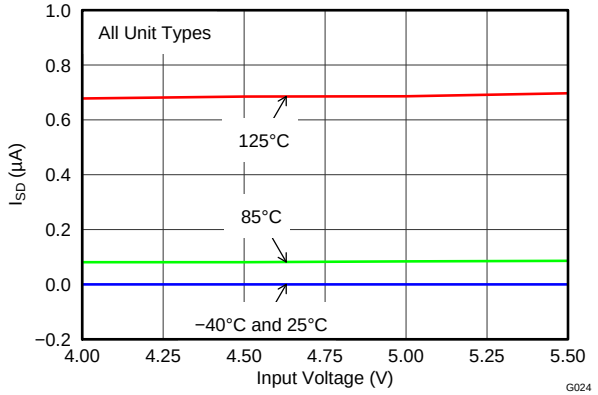

Figure 34. Disabled Supply Current (I_{SD}) vs Input Voltage

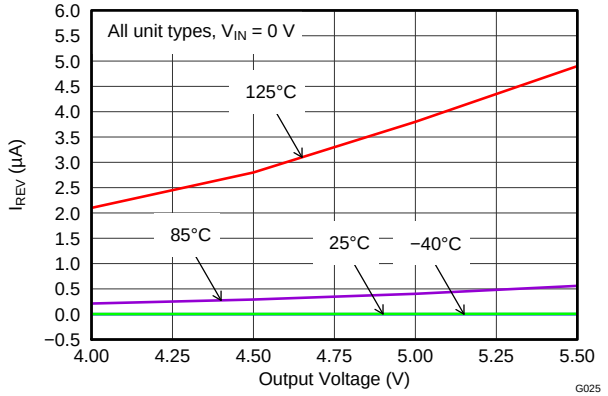

Figure 35. Reverse Leakage Current (I_{REV}) vs Output Voltage

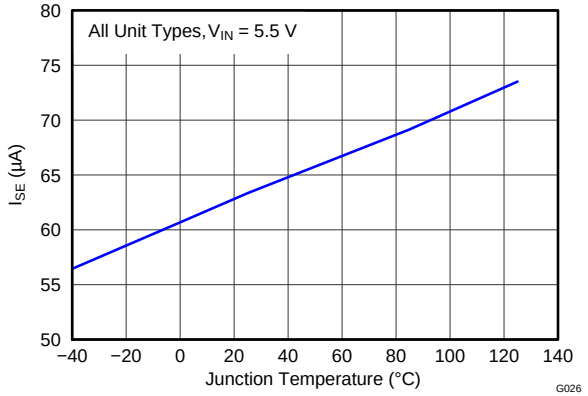

Figure 36. Enabled Supply Current (I_{SE}) vs Temperature

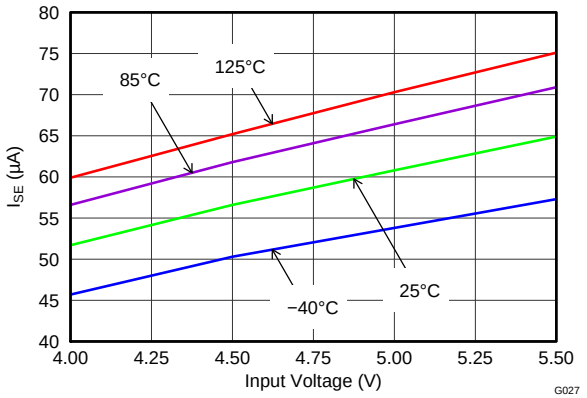

Figure 37. Enabled Supply Current (I_{SE}) vs Input Voltage

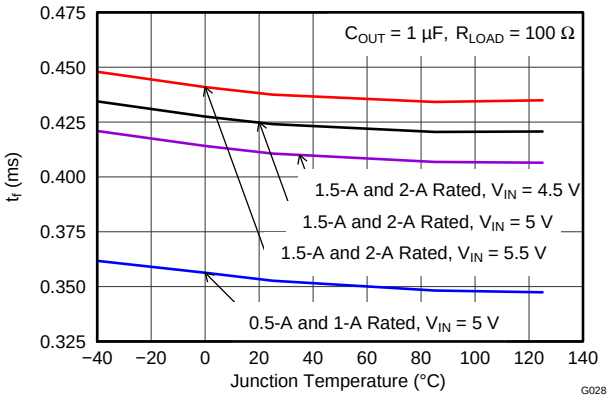

Figure 38. Output Fall Time (t_F) vs Temperature

Copyright © 2011–2012, Texas Instruments Incorporated

TYPICAL CHARACTERISTICS (continued)

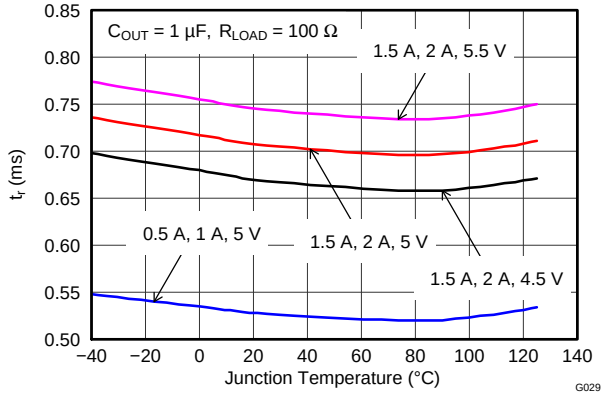

Figure 39. Output Rise Time (t_R) vs Temperature

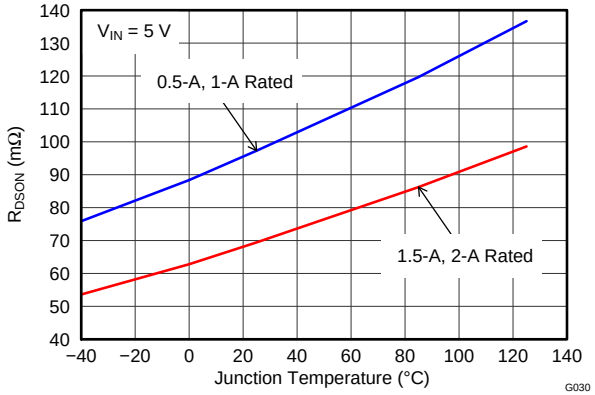

Figure 40. Input-Output Resistance ($R_{DS(ON)}$) vs Temperature

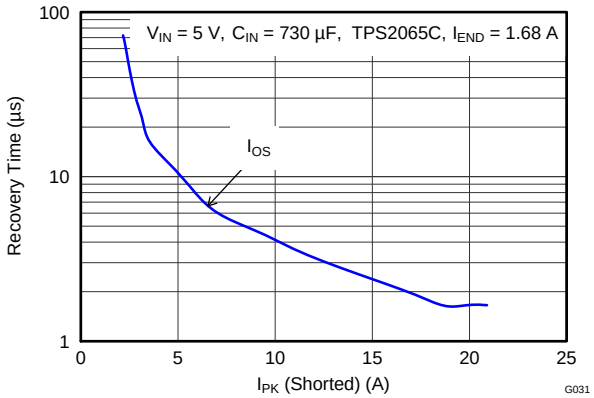

Figure 41. Recovery vs Current Peak

DETAILED DESCRIPTION

The TPS20xxC and TPS20xxC-2 are current-limited, power-distribution switches providing between 0.5 A and 2 A of continuous load current in 5 V circuits. These parts use N-channel MOSFETs for low resistance, maintaining voltage regulation to the load. They are designed for applications where short circuits or heavy capacitive loads will be encountered. Device features include enable, reverse blocking when disabled, output discharge pulldown, overcurrent protection, over-temperature protection, and deglitched fault reporting.

UVLO

The undervoltage lockout (UVLO) circuit disables the power switch until the input voltage reaches the UVLO turn-on threshold. Built-in hysteresis prevents unwanted on/off cycling due to input voltage drop from large current surges. $\overline{FLT}$ is high impedance when the TPS20xxC and TPS20xxC-2 are in UVLO.

ENABLE

The logic enable input (EN, or $\overline{EN}$), controls the power switch, bias for the charge pump, driver, and other circuits. The supply current is reduced to less than 1 µA when the TPS20xxC and TPS20xxC-2 are disabled. Disabling the TPS20xxC and TPS20xxC-2 will immediately clear an active $\overline{FLT}$ indication. The enable input is compatible with both TTL and CMOS logic levels.

The turnon and turnoff times (t_{ON}, t_{OFF}) are composed of a delay and a rise or fall time (t_R, t_F). The delay times are internally controlled. The rise time is controlled by both the TPS20xxC and TPS20xxC-2 and the external loading (especially capacitance). TPS20xxC fall time is controlled by the loading (R and C), and the output discharge (R_{PD}). TPS20xxC-2 does not have the output discharge (R_{PD}), fall time is controlled by the loading (R and C). An output load consisting of only a resistor will experience a fall time set by the TPS20xxC and TPS20xxC-2. An output load with parallel R and C elements will experience a fall time determined by the (R × C) time constant if it is longer than the TPS20xxC and TPS20xxC-2's t_F.

The enable should not be left open, and may be tied to VIN or GND depending on the device.

INTERNAL CHARGE PUMP

The device incorporates an internal charge pump and gate drive circuitry necessary to drive the N-channel MOSFET. The charge pump supplies power to the gate driver circuit and provides the necessary voltage to pull the gate of the MOSFET above the source. The driver incorporates circuitry that controls the rise and fall times of the output voltage to limit large current and voltage surges on the input supply, and provides built-in soft-start functionality. The MOSFET power switch will block current from OUT to IN when turned off by the UVLO or disabled.

CURRENT LIMIT

The TPS20xxC and TPS20xxC-2 responds to overloads by limiting output current to the static I_{OS} levels shown in the Electrical Characteristics table. When an overload condition is present, the device maintains a constant output current, with the output voltage determined by ($I_{OS} \times R_{LOAD}$). Two possible overload conditions can occur.

The first overload condition occurs when either: 1) input voltage is first applied, enable is true, and a short circuit is present (load which draws $I_{OUT} > I_{OS}$), or 2) input voltage is present and the TPS20xxC and TPS20xxC-2 are enabled into a short circuit. The output voltage is held near zero potential with respect to ground and the TPS20xxC and TPS20xxC-2 ramps the output current to I_{OS}. The TPS20xxC and TPS20xxC-2 will limit the current to I_{OS} until the overload condition is removed or the device begins to thermal cycle. This is demonstrated in Figure 13 where the device was enabled into a short, and subsequently cycles current off and on as the thermal protection engages.

The second condition is when an overload occurs while the device is enabled and fully turned on. The device responds to the overload condition within t_{IOS} (Figure 6 and Figure 7) when the specified overload (per Electrical Characteristics table) is applied. The response speed and shape will vary with the overload level, input circuit, and rate of application. The current-limit response will vary between simply settling to I_{OS}, or turnoff and controlled return to I_{OS}. Similar to the previous case, the TPS20xxC and TPS20xxC-2 will limit the current to I_{OS} until the overload condition is removed or the device begins to thermal cycle. This is demonstrated by Figure 14, Figure 15, and Figure 16.

Copyright © 2011–2012, Texas Instruments Incorporated

The TPS20xxC and TPS20xxC-2 thermal cycles if an overload condition is present long enough to activate thermal limiting in any of the above cases. This is due to the relatively large power dissipation [(V_{IN} – V_{OUT}) x I_{OS}] driving the junction temperature up. The device turns off when the junction temperature exceeds 135°C (min) while in current limit. The device remains off until the junction temperature cools 20°C and then restarts.

There are two kinds of current limit profiles typically available in TI switch products similar to the TPS20xxC and TPS20xxC-2. Many older designs have an output I vs V characteristic similar to the plot labeled "Current Limit with Peaking" in Figure 42. This type of limiting can be characterized by two parameters, the current limit corner (I_{OC}), and the short circuit current (I_{OS}). I_{OC} is often specified as a maximum value. The TPS20xxC and TPS20xxC-2 family of parts does not present noticeable peaking in the current limit, corresponding to the characteristic labeled "Flat Current Limit" in Figure 42. This is why the I_{OC} parameter is not present in the Electrical Characteristics tables.

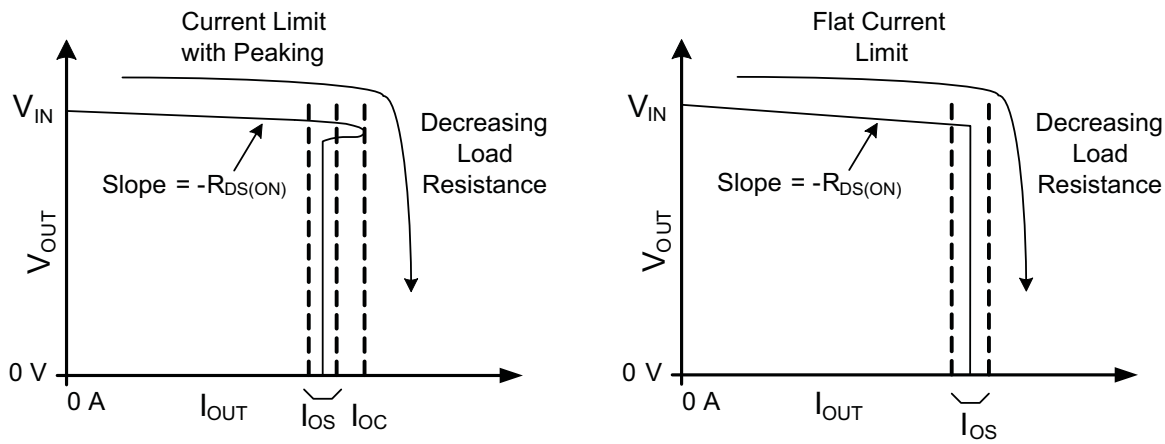

Figure 42. Current Limit Profiles

$\overline{\text{FLT}}$

The $\overline{\text{FLT}}$ open-drain output is asserted (active low) during an overload or over-temperature condition. A 9 ms deglitch on both the rising and falling edges avoids false reporting at startup and during transients. A current limit condition shorter than the deglitch period will clear the internal timer upon termination. The deglitch timer will not integrate multiple short overloads and declare a fault. This is also true for exiting from a faulted state. An input voltage with excessive ripple and large output capacitance may interfere with operation of $\overline{\text{FLT}}$ around I_{OS} as the ripple will drive the TPS20xxC and TPS20xxC-2 in and out of current limit.

If the TPS20xxC and TPS20xxC-2 are in current limit and the over-temperature circuit goes active, $\overline{\text{FLT}}$ will go true immediately (see Figure 14) however exiting this condition is deglitched (see Figure 16). $\overline{\text{FLT}}$ is tripped just as the knee of the constant-current limiting is entered. Disabling the TPS20xxC and TPS20xxC-2 will clear an active $\overline{\text{FLT}}$ as soon as the switch turns off (see Figure 13). $\overline{\text{FLT}}$ is high impedance when the TPS20xxC and TPS20xxC-2 are disabled or in under-voltage lockout (UVLO).

OUTPUT DISCHARGE

A 470Ω (typical) output discharge will dissipate stored charge and leakage current on OUT when the TPS20xxC is in UVLO or disabled. The pull-down circuit will lose bias gradually as V_{IN} decreases, causing a rise in the discharge resistance as V_{IN} falls towards 0 V. The TPS20xxC-2 does not have this function. The output is be controlled by an external loadings when the device is in ULVO or disabled.

Copyright © 2011–2012, Texas Instruments Incorporated

APPLICATION INFORMATION

INPUT AND OUTPUT CAPACITANCE

Input and output capacitance improves the performance of the device; the actual capacitance should be optimized for the particular application. For all applications, a 0.1 µF or greater ceramic bypass capacitor between IN and GND is recommended as close to the device as possible for local noise decoupling.

All protection circuits such as the TPS20xxC and TPS20xxC-2 will have the potential for input voltage overshoots and output voltage undershoots.

Input voltage overshoots can be caused by either of two effects. The first cause is an abrupt application of input voltage in conjunction with input power bus inductance and input capacitance when the IN terminal is high impedance (before turn on). Theoretically, the peak voltage is 2 times the applied. The second cause is due to the abrupt reduction of output short circuit current when the TPS20xxC and TPS20xxC-2 turns off and energy stored in the input inductance drives the input voltage high. Input voltage droops may also occur with large load steps and as the TPS20xxC and TPS20xxC-2 output is shorted. Applications with large input inductance (e.g. connecting the evaluation board to the bench power-supply through long cables) may require large input capacitance reduce the voltage overshoot from exceeding the absolute maximum voltage of the device. The fast current-limit speed of the TPS20xxC and TPS20xxC-2 to hard output short circuits isolates the input bus from faults. However, ceramic input capacitance in the range of 1µF to 22µF adjacent to the TPS20xxC and TPS20xxC-2 input aids in both speeding the response time and limiting the transient seen on the input power bus. Momentary input transients to 6.5V are permitted.

Output voltage undershoot is caused by the inductance of the output power bus just after a short has occurred and the TPS20xxC and TPS20xxC-2 has abruptly reduced OUT current. Energy stored in the inductance will drive the OUT voltage down and potentially negative as it discharges. Applications with large output inductance (such as from a cable) benefit from use of a high-value output capacitor to control the voltage undershoot. When implementing USB standard applications, a 120 µF minimum output capacitance is required. Typically a 150 µF electrolytic capacitor is used, which is sufficient to control voltage undershoots. However, if the application does not require 120 µF of capacitance, and there is potential to drive the output negative, a minimum of 10 µF ceramic capacitance on the output is recommended. The voltage undershoot should be controlled to less than 1.5 V for 10 µs.

POWER DISSIPATION AND JUNCTION TEMPERATURE

It is good design practice to estimate power dissipation and maximum expected junction temperature of the TPS20xxC and TPS20xxC-2. The system designer can control choices of package, proximity to other power dissipating devices, and printed circuit board (PCB) design based on these calculations. These have a direct influence on maximum junction temperature. Other factors, such as airflow and maximum ambient temperature, are often determined by system considerations. It is important to remember that these calculations do not include the effects of adjacent heat sources, and enhanced or restricted air flow.

Addition of extra PCB copper area around these devices is recommended to reduce the thermal impedance and maintain the junction temperature as low as practical. The lower junction temperatures achieved by soldering the pad improve the efficiency and reliability of both TPS20xxC and TPS20xxC-2 parts and the system. The following examples were used to determine the θ_{JA}Custom thermal impedances noted in the THERMAL INFORMATION table. They were based on use of the JEDEC high-k circuit board construction (2 signal and 2 plane) with 4, 1oz. copper weight, layers.

While it is recommended that the DGN package PAD be soldered to circuit board copper fill and vias for low thermal impedance, there may be cases where this is not desired. For example, use of routing area under the IC. Some devices are available in packages without the Power Pad (DGK) specifically for this purpose. The θ_{JA} for the DGN package with the pad not soldered and no extra copper, is approximately 141°C/W for 0.5 - A and 1- A rated parts, and 139°C/W for the 1.5 - A and 2- A rated parts. The θ_{JA} for the DGK mounted per Figure 45 is 110.3C/W. These values may be used in Equation 1 to determine the maximum junction temperature.

Copyright © 2011–2012, Texas Instruments Incorporated

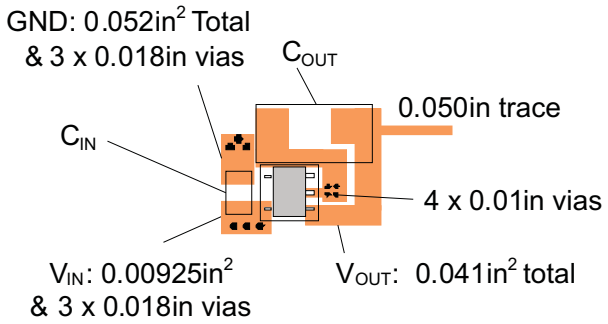

Figure 43. DBV Package PCB Layout Example

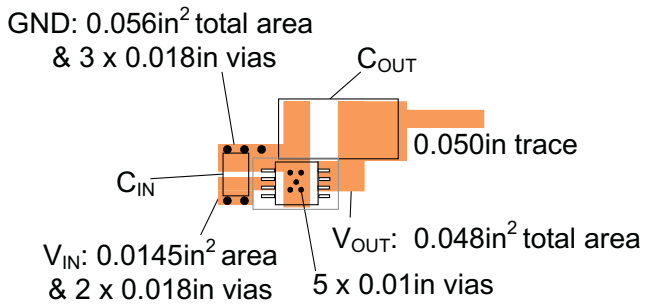

Figure 44. DGN Package PCB Layout Example

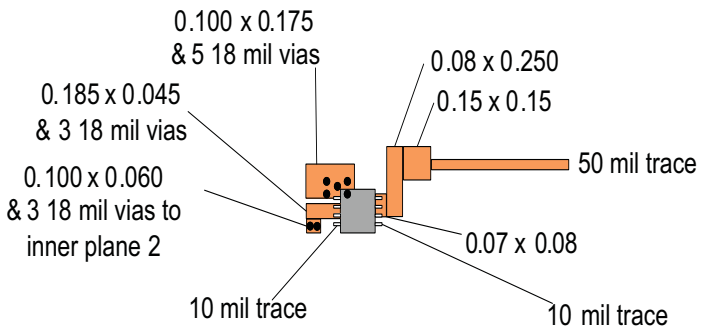

Figure 45. DGK Package PCB Layout Example

The following procedure requires iteration because power loss is due to the internal MOSFET $I^2 \times R_{DS(ON)}$, and $R_{DS(ON)}$ is a function of the junction temperature. As an initial estimate, use the $R_{DS(ON)}$ at 125°C from the TYPICAL CHARACTERISTICS, and the preferred package thermal resistance for the preferred board construction from the THERMAL INFORMATION table.

$$T_J = T_A + ((I_{OUT}^2 \times R_{DS(ON)}) \times \theta_{JA}) \quad (1)$$

Where:

I_{OUT} = rated OUT pin current (A)
$R_{DS(ON)}$ = Power switch on-resistance at an assumed T_J (Ω)
T_A = Maximum ambient temperature (°C)
T_J = Maximum junction temperature (°C)
θ_{JA} = Thermal resistance (°C/W)

If the calculated T_J is substantially different from the original assumption, estimate a new value of $R_{DS(ON)}$ using the typical characteristic plot and recalculate.

If the resulting T_J is not less than 125°C, try a PCB construction and/or package with lower θ_{JA} .

Copyright © 2011–2012, Texas Instruments Incorporated

REVISION HISTORY

Changes from Original (June 2011) to Revision A — **Page**

- Changed the TPS2051C, TPS2065C, and TPS2069C Devices Status From: Preview To: Active 1
- Corrected pinout numbers for the 5-PIN PACKAGE 7

Changes from Revision A (July 2011) to Revision B — **Page**

- Added the DGK Package Information throughout the data sheet 1
- Changed title of Figure 17 From: NEW FIG To: TPS2065C 50 Ω Short Circuit 9

Changes from Revision B (September 2011) to Revision C — **Page**

- Changed TPS2000C (MSOP-8) status From: Preview To: Active in Table 1 1
- Changed From: PXF1 To: PXFI and From: PSG1 To: PXGI in the DEVICE INFORMATION table MOSP-8 (DGK) column 2
- Changed the θJACustom 2 A Rated DGK value from N/A to 110.3 2
- Added Figure 45 - DGK Package PCB Layout Example 17

Changes from Revision C (October 2011) to Revision D — **Page**

- Added Feature UL Listed and CB-File No. E169910 (See Table 1) 1
- Added table Note 2, UL listed and CB complete. 1
- Added V_{IH} and V_{IL} information to the ROC Table 3

Changes from Revision D (February 2012) to Revision E — **Page**

- Changed the POWER DISSIPATION AND JUNCTION TEMPERATURE section. Replaced paragraph " While it is recommended..." 16

Copyright © 2011–2012, Texas Instruments Incorporated

Changes from Revision E (April 2012) to Revision F **Page**

- Added device TPS20xxC-2 1
- Changed Feature From: Ouput Discharge When TPS20XXC is Disabled To: Selected parts with (TPS20xxC) and without (TPS20xxC-2) Output Discharge 1
- Added devices TPS2041C, TPS2061C, TPS2065C-2, TPS2068C, and TPS2069C-2 to Table 1 and removed Product Preview 1
- Added the TPS2069C-2 Device 1
- Added devices TPS2041C, TPS2061C, TPS2065C-2, TPS2068C, and TPS2069C-2 to the Device Information table 2
- Added PXKI in the DEVICE INFORMATION table SOT23-5 (DBV) column (TPS2069C) 2
- Added Note 1 to the RECOMMENDED OPERATING CONDITIONS table 3
- Added TPS2041C, TPS2061C, TPS2068C, TPS2065C-2 and TPS2069C-2 devices to I_{OUT} in the RECOMMENDED OPERATING CONDITIONS table 3
- Added the DBV option to Power Switch $R_{DS(on)}$ 1.5 A rated output, 25°C mΩ 3
- Added the DBV option to Power Switch $R_{DS(on)}$ 1.5 A rated output 3
- Changed I_{SO} Current Limit 3
- Added Leakage Current 3
- Added the DBV option to Power Switch $R_{DS(on)}$ 1.5 A rated output 4
- Changed I_{SO} Current Limit 4
- Added Leakage Current 5
- Changed the second para graph of the ENABLE section 14
- Added sentence to end of paragraph in the OUTPUT DISCHARGE section 15

PACKAGING INFORMATION

Orderable Device	Status (1)	Package Type	Package Drawing	Pins	Package Qty	Eco Plan (2)	Lead/Ball Finish	MSL Peak Temp (3)	Op Temp (°C)	Top-Side Markings (4)	Samples
TPS2000CDGK	ACTIVE	VSSOP	DGK	8	80	Green (RoHS & no Sb/Br)	CU NIPDAUAG	Level-2-260C-1 YEAR	-40 to 85	PXFI	Samples
TPS2000CDGKR	ACTIVE	VSSOP	DGK	8	2500	Green (RoHS & no Sb/Br)	CU NIPDAUAG	Level-2-260C-1 YEAR	-40 to 85	PXFI	Samples
TPS2000CDGN	ACTIVE	MSOP-PowerPAD	DGN	8	80	Green (RoHS & no Sb/Br)	CU NIPDAU	Level-2-260C-1 YEAR	-40 to 85	BCMS	Samples
TPS2000CDGNR	ACTIVE	MSOP-PowerPAD	DGN	8	2500	Green (RoHS & no Sb/Br)	CU NIPDAU	Level-2-260C-1 YEAR	-40 to 85	BCMS	Samples
TPS2001CDGK	ACTIVE	VSSOP	DGK	8	80	Green (RoHS & no Sb/Br)	CU NIPDAUAG	Level-2-260C-1 YEAR	-40 to 85	PXGI	Samples
TPS2001CDGKR	ACTIVE	VSSOP	DGK	8	2500	Green (RoHS & no Sb/Br)	CU NIPDAUAG	Level-2-260C-1 YEAR	-40 to 85	PXGI	Samples
TPS2001CDGN	ACTIVE	MSOP-PowerPAD	DGN	8	80	Green (RoHS & no Sb/Br)	CU NIPDAU	Level-2-260C-1 YEAR	-40 to 85	VBWQ	Samples
TPS2001CDGNR	ACTIVE	MSOP-PowerPAD	DGN	8	2500	Green (RoHS & no Sb/Br)	CU NIPDAU	Level-2-260C-1 YEAR	-40 to 85	VBWQ	Samples
TPS2041CDBVR	ACTIVE	SOT-23	DBV	5	3000	Green (RoHS & no Sb/Br)	CU NIPDAU	Level-2-260C-1 YEAR	-40 to 85	PYJI	Samples
TPS2041CDBVT	ACTIVE	SOT-23	DBV	5	250	Green (RoHS & no Sb/Br)	CU NIPDAU	Level-2-260C-1 YEAR	-40 to 85	PYJI	Samples
TPS2051CDBVR	ACTIVE	SOT-23	DBV	5	3000	Green (RoHS & no Sb/Br)	CU NIPDAU	Level-2-260C-1 YEAR	-40 to 85	VBYQ	Samples
TPS2051CDBVT	ACTIVE	SOT-23	DBV	5	250	Green (RoHS & no Sb/Br)	CU NIPDAU	Level-2-260C-1 YEAR	-40 to 85	VBYQ	Samples
TPS2061CDBVR	ACTIVE	SOT-23	DBV	5	3000	Green (RoHS & no Sb/Br)	CU NIPDAU	Level-2-260C-1 YEAR	-40 to 85	PXLI	Samples
TPS2061CDBVT	ACTIVE	SOT-23	DBV	5	250	Green (RoHS & no Sb/Br)	CU NIPDAU	Level-2-260C-1 YEAR	-40 to 85	PXLI	Samples
TPS2061CDGN	ACTIVE	MSOP-PowerPAD	DGN	8	80	Green (RoHS & no Sb/Br)	CU NIPDAUAG	Level-2-260C-1 YEAR	-40 to 85	PXMI	Samples
TPS2061CDGNR	ACTIVE	MSOP-PowerPAD	DGN	8	2500	Green (RoHS & no Sb/Br)	CU NIPDAUAG	Level-2-260C-1 YEAR	-40 to 85	PXMI	Samples
TPS2065CDBVR	ACTIVE	SOT-23	DBV	5	3000	Green (RoHS & no Sb/Br)	CU NIPDAU	Level-2-260C-1 YEAR	-40 to 85	VCAQ	Samples

Orderable Device	Status (1)	Package Type	Package Drawing	Pins	Package Qty	Eco Plan (2)	Lead/Ball Finish	MSL Peak Temp (3)	Op Temp (°C)	Top-Side Markings (4)	Samples
TPS2065CDBVR-2	ACTIVE	SOT-23	DBV	5	3000	Green (RoHS & no Sb/Br)	CU NIPDAU	Level-2-260C-1 YEAR	-40 to 85	PYQI	Samples
TPS2065CDBVT	ACTIVE	SOT-23	DBV	5	250	Green (RoHS & no Sb/Br)	CU NIPDAU	Level-2-260C-1 YEAR	-40 to 85	VCAQ	Samples
TPS2065CDBVT-2	ACTIVE	SOT-23	DBV	5	250	Green (RoHS & no Sb/Br)	CU NIPDAU	Level-2-260C-1 YEAR	-40 to 85	PYQI	Samples
TPS2065CDGN	ACTIVE	MSOP-PowerPAD	DGN	8	80	Green (RoHS & no Sb/Br)	CU NIPDAU	Level-2-260C-1 YEAR	-40 to 85	VCAQ	Samples
TPS2065CDGN-2	ACTIVE	MSOP-PowerPAD	DGN	8	80	Green (RoHS & no Sb/Br)	CU NIPDAUAG	Level-2-260C-1 YEAR	-40 to 85	PYRI	Samples
TPS2065CDGNR	ACTIVE	MSOP-PowerPAD	DGN	8	2500	Green (RoHS & no Sb/Br)	CU NIPDAU	Level-2-260C-1 YEAR	-40 to 85	VCAQ	Samples
TPS2065CDGNR-2	ACTIVE	MSOP-PowerPAD	DGN	8	2500	Green (RoHS & no Sb/Br)	CU NIPDAUAG	Level-2-260C-1 YEAR	-40 to 85	PYRI	Samples
TPS2068CDGN	ACTIVE	MSOP-PowerPAD	DGN	8	80	Green (RoHS & no Sb/Br)	CU NIPDAUAG	Level-2-260C-1 YEAR	-40 to 85	PXNI	Samples
TPS2068CDGNR	ACTIVE	MSOP-PowerPAD	DGN	8	2500	Green (RoHS & no Sb/Br)	CU NIPDAUAG	Level-2-260C-1 YEAR	-40 to 85	PXNI	Samples
TPS2069CDBVR	ACTIVE	SOT-23	DBV	5	3000	Green (RoHS & no Sb/Br)	CU NIPDAU	Level-2-260C-1 YEAR	-40 to 85	PYKI	Samples
TPS2069CDBVT	ACTIVE	SOT-23	DBV	5	250	Green (RoHS & no Sb/Br)	CU NIPDAU	Level-2-260C-1 YEAR	-40 to 85	PYKI	Samples
TPS2069CDGN	ACTIVE	MSOP-PowerPAD	DGN	8	80	Green (RoHS & no Sb/Br)	CU NIPDAU	Level-2-260C-1 YEAR	-40 to 85	VBUQ	Samples
TPS2069CDGN-2	ACTIVE	MSOP-PowerPAD	DGN	8	80	Green (RoHS & no Sb/Br)	CU NIPDAUAG	Level-2-260C-1 YEAR	-40 to 85	PYSI	Samples
TPS2069CDGNR	ACTIVE	MSOP-PowerPAD	DGN	8	2500	Green (RoHS & no Sb/Br)	CU NIPDAU	Level-2-260C-1 YEAR	-40 to 85	VBUQ	Samples
TPS2069CDGNR-2	ACTIVE	MSOP-PowerPAD	DGN	8	2500	Green (RoHS & no Sb/Br)	CU NIPDAUAG	Level-2-260C-1 YEAR	-40 to 85	PYSI	Samples

(1) The marketing status values are defined as follows:
ACTIVE: Product device recommended for new designs.
LIFEBUY: TI has announced that the device will be discontinued, and a lifetime-buy period is in effect.
NRND: Not recommended for new designs. Device is in production to support existing customers, but TI does not recommend using this part in a new design.
PREVIEW: Device has been announced but is not in production. Samples may or may not be available.
OBSOLETE: TI has discontinued the production of the device.

(2) Eco Plan - The planned eco-friendly classification: Pb-Free (RoHS), Pb-Free (RoHS Exempt), or Green (RoHS & no Sb/Br) - please check http://www.ti.com/productcontent for the latest availability information and additional product content details.
TBD: The Pb-Free/Green conversion plan has not been defined.
Pb-Free (RoHS): TI's terms "Lead-Free" or "Pb-Free" mean semiconductor products that are compatible with the current RoHS requirements for all 6 substances, including the requirement that lead not exceed 0.1% by weight in homogeneous materials. Where designed to be soldered at high temperatures, TI Pb-Free products are suitable for use in specified lead-free processes.
Pb-Free (RoHS Exempt): This component has a RoHS exemption for either 1) lead-based flip-chip solder bumps used between the die and package, or 2) lead-based die adhesive used between the die and leadframe. The component is otherwise considered Pb-Free (RoHS compatible) as defined above.
Green (RoHS & no Sb/Br): TI defines "Green" to mean Pb-Free (RoHS compatible), and free of Bromine (Br) and Antimony (Sb) based flame retardants (Br or Sb do not exceed 0.1% by weight in homogeneous material)

(3) MSL, Peak Temp. -- The Moisture Sensitivity Level rating according to the JEDEC industry standard classifications, and peak solder temperature.

(4) Multiple Top-Side Markings will be inside parentheses. Only one Top-Side Marking contained in parentheses and separated by a "~" will appear on a device. If a line is indented then it is a continuation of the previous line and the two combined represent the entire Top-Side Marking for that device.

Important Information and Disclaimer: The information provided on this page represents TI's knowledge and belief as of the date that it is provided. TI bases its knowledge and belief on information provided by third parties, and makes no representation or warranty as to the accuracy of such information. Efforts are underway to better integrate information from third parties. TI has taken and continues to take reasonable steps to provide representative and accurate information but may not have conducted destructive testing or chemical analysis on incoming materials and chemicals. TI and TI suppliers consider certain information to be proprietary, and thus CAS numbers and other limited information may not be available for release.

In no event shall TI's liability arising out of such information exceed the total purchase price of the TI part(s) at issue in this document sold by TI to Customer on an annual basis.

TAPE AND REEL INFORMATION

REEL DIMENSIONS

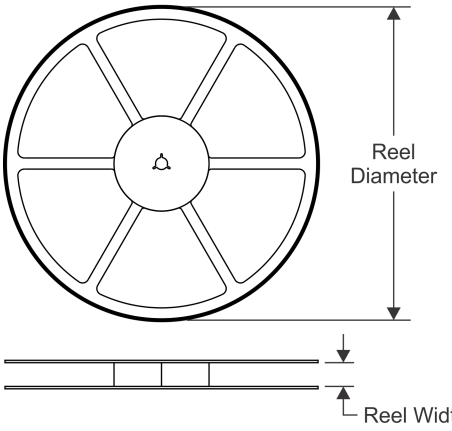

TAPE DIMENSIONS

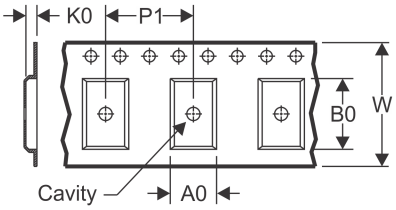

A0	Dimension designed to accommodate the component width
B0	Dimension designed to accommodate the component length
K0	Dimension designed to accommodate the component thickness
W	Overall width of the carrier tape
P1	Pitch between successive cavity centers

QUADRANT ASSIGNMENTS FOR PIN 1 ORIENTATION IN TAPE

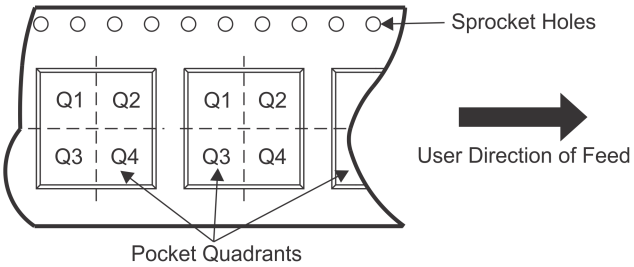

*All dimensions are nominal

Device	Package Type	Package Drawing	Pins	SPQ	Reel Diameter (mm)	Reel Width W1 (mm)	A0 (mm)	B0 (mm)	K0 (mm)	P1 (mm)	W (mm)	Pin1 Quadrant
TPS2000CDGKR	VSSOP	DGK	8	2500	330.0	12.4	5.3	3.4	1.4	8.0	12.0	Q1
TPS2000CDGNR	MSOP-Power PAD	DGN	8	2500	330.0	12.4	5.3	3.4	1.4	8.0	12.0	Q1
TPS2001CDGKR	VSSOP	DGK	8	2500	330.0	12.4	5.3	3.4	1.4	8.0	12.0	Q1
TPS2001CDGNR	MSOP-Power PAD	DGN	8	2500	330.0	12.4	5.3	3.4	1.4	8.0	12.0	Q1
TPS2041CDBVR	SOT-23	DBV	5	3000	178.0	9.0	3.23	3.17	1.37	4.0	8.0	Q3
TPS2051CDBVR	SOT-23	DBV	5	3000	178.0	9.0	3.23	3.17	1.37	4.0	8.0	Q3
TPS2061CDBVR	SOT-23	DBV	5	3000	178.0	9.0	3.23	3.17	1.37	4.0	8.0	Q3
TPS2061CDGNR	MSOP-Power PAD	DGN	8	2500	330.0	12.4	5.3	3.4	1.4	8.0	12.0	Q1
TPS2065CDBVR	SOT-23	DBV	5	3000	178.0	9.0	3.23	3.17	1.37	4.0	8.0	Q3
TPS2065CDBVR-2	SOT-23	DBV	5	3000	178.0	9.0	3.23	3.17	1.37	4.0	8.0	Q3
TPS2065CDGNR	MSOP-Power PAD	DGN	8	2500	330.0	12.4	5.3	3.4	1.4	8.0	12.0	Q1
TPS2065CDGNR-2	MSOP-Power	DGN	8	2500	330.0	12.4	5.3	3.4	1.4	8.0	12.0	Q1

Device	Package Type	Package Drawing	Pins	SPQ	Reel Diameter (mm)	Reel Width W1 (mm)	A0 (mm)	B0 (mm)	K0 (mm)	P1 (mm)	W (mm)	Pin1 Quadrant
	PAD											
TPS2068CDGNR	MSOP-Power PAD	DGN	8	2500	330.0	12.4	5.3	3.4	1.4	8.0	12.0	Q1
TPS2069CDBVR	SOT-23	DBV	5	3000	178.0	9.0	3.23	3.17	1.37	4.0	8.0	Q3
TPS2069CDGNR	MSOP-Power PAD	DGN	8	2500	330.0	12.4	5.3	3.4	1.4	8.0	12.0	Q1
TPS2069CDGNR-2	MSOP-Power PAD	DGN	8	2500	330.0	12.4	5.3	3.4	1.4	8.0	12.0	Q1

TAPE AND REEL BOX DIMENSIONS

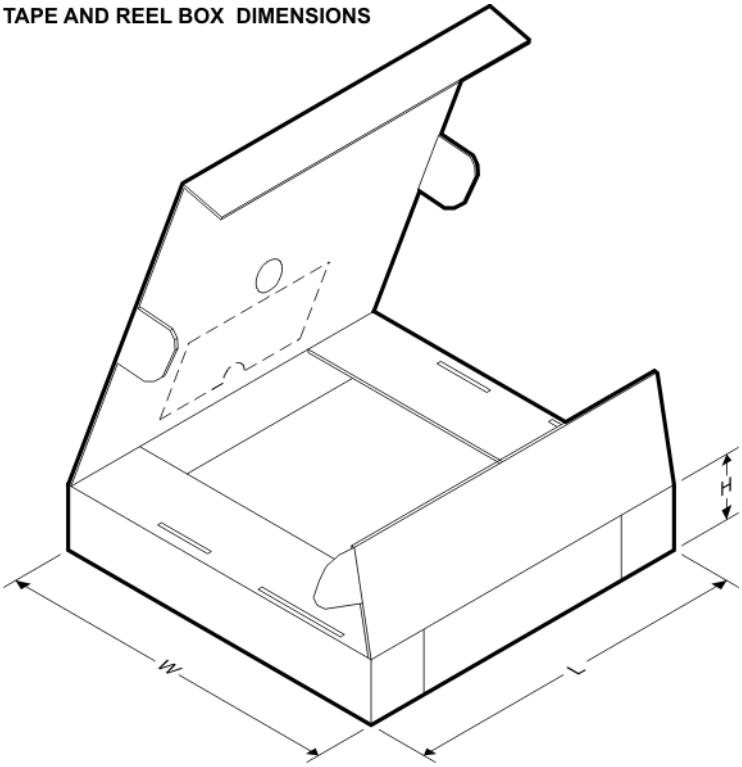

*All dimensions are nominal

Device	Package Type	Package Drawing	Pins	SPQ	Length (mm)	Width (mm)	Height (mm)
TPS2000CDGKR	VSSOP	DGK	8	2500	366.0	364.0	50.0
TPS2000CDGNR	MSOP-PowerPAD	DGN	8	2500	360.0	162.0	98.0
TPS2001CDGKR	VSSOP	DGK	8	2500	366.0	364.0	50.0
TPS2001CDGNR	MSOP-PowerPAD	DGN	8	2500	360.0	162.0	98.0
TPS2041CDBVR	SOT-23	DBV	5	3000	180.0	180.0	18.0
TPS2051CDBVR	SOT-23	DBV	5	3000	180.0	180.0	18.0
TPS2061CDBVR	SOT-23	DBV	5	3000	180.0	180.0	18.0
TPS2061CDGNR	MSOP-PowerPAD	DGN	8	2500	366.0	364.0	50.0

Device	Package Type	Package Drawing	Pins	SPQ	Length (mm)	Width (mm)	Height (mm)
TPS2065CDBVR	SOT-23	DBV	5	3000	180.0	180.0	18.0
TPS2065CDBVR-2	SOT-23	DBV	5	3000	180.0	180.0	18.0
TPS2065CDGNR	MSOP-PowerPAD	DGN	8	2500	360.0	162.0	98.0
TPS2065CDGNR-2	MSOP-PowerPAD	DGN	8	2500	366.0	364.0	50.0
TPS2068CDGNR	MSOP-PowerPAD	DGN	8	2500	366.0	364.0	50.0
TPS2069CDBVR	SOT-23	DBV	5	3000	180.0	180.0	18.0
TPS2069CDGNR	MSOP-PowerPAD	DGN	8	2500	360.0	162.0	98.0
TPS2069CDGNR-2	MSOP-PowerPAD	DGN	8	2500	366.0	364.0	50.0

DBV (R–PDSO–G5) PLASTIC SMALL–OUTLINE PACKAGE

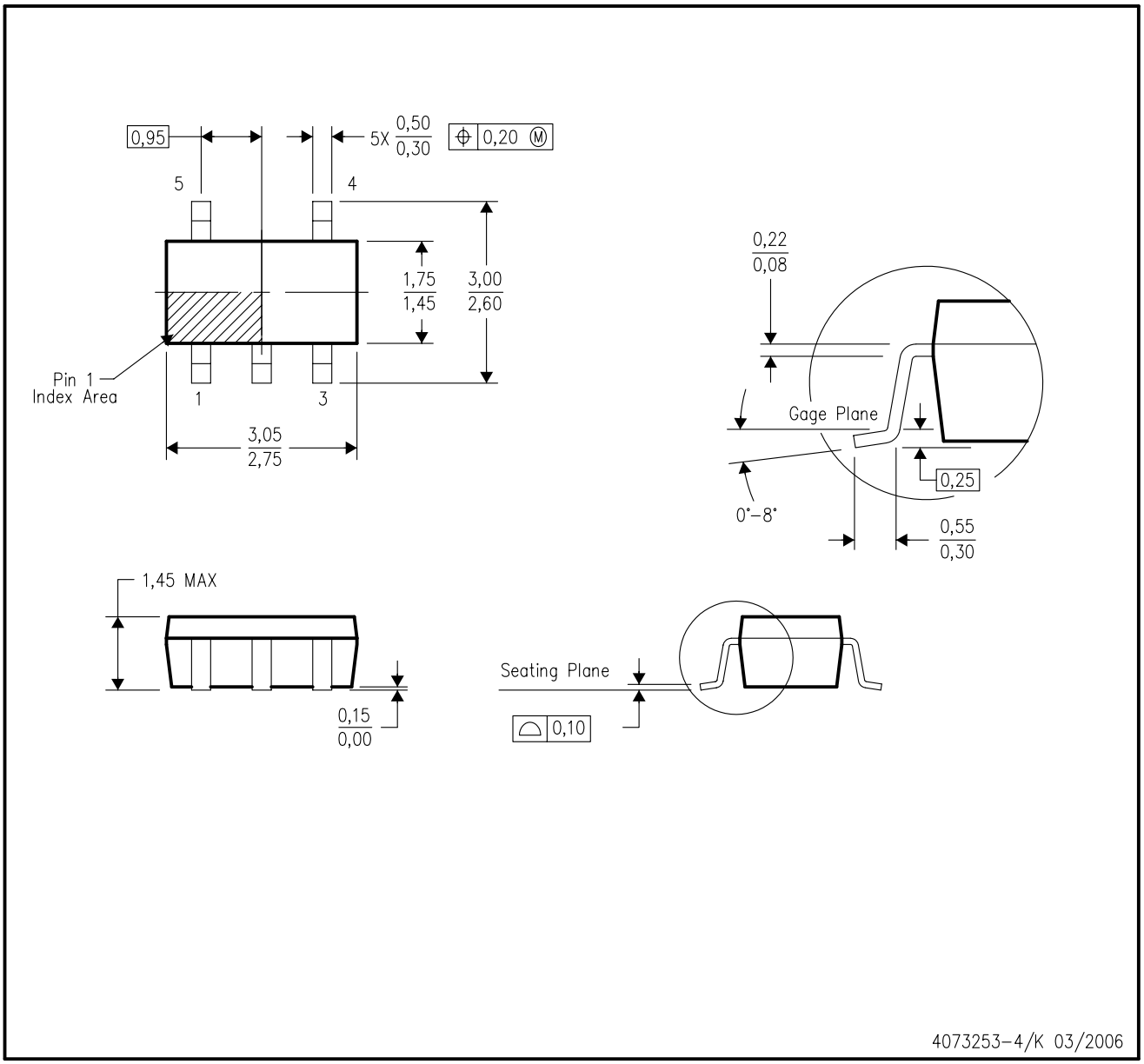

NOTES:
A. All linear dimensions are in millimeters.
B. This drawing is subject to change without notice.
C. Body dimensions do not include mold flash or protrusion. Mold flash and protrusion shall not exceed 0.15 per side.
D. Falls within JEDEC MO–178 Variation AA.

DBV (R-PDSO-G5) PLASTIC SMALL OUTLINE

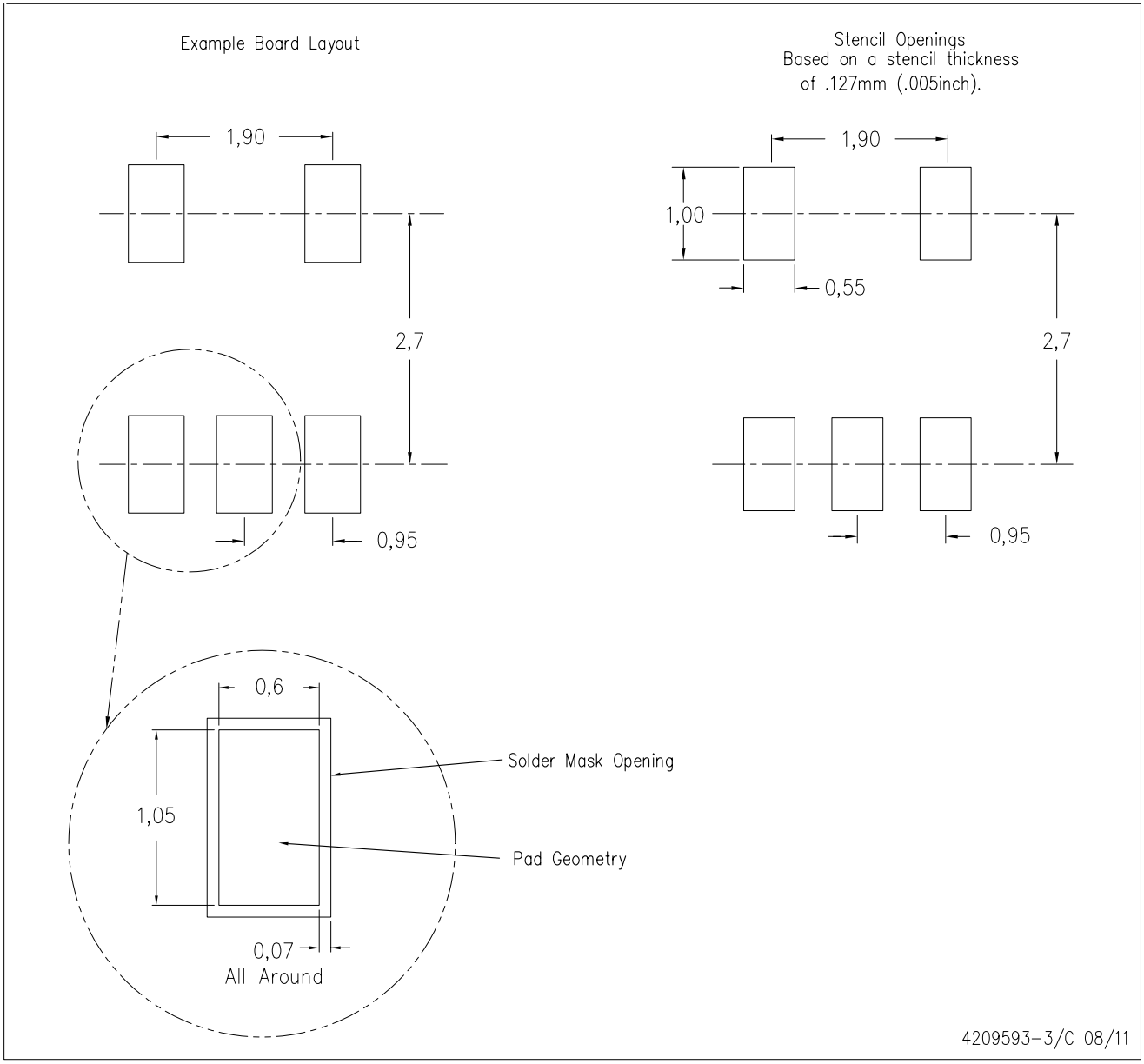

NOTES:
A. All linear dimensions are in millimeters.
B. This drawing is subject to change without notice.
C. Customers should place a note on the circuit board fabrication drawing not to alter the center solder mask defined pad.
D. Publication IPC-7351 is recommended for alternate designs.
E. Laser cutting apertures with trapezoidal walls and also rounding corners will offer better paste release. Customers should contact their board assembly site for stencil design recommendations. Example stencil design based on a 50% volumetric metal load solder paste. Refer to IPC-7525 for other stencil recommendations.

DGK (S–PDSO–G8) PLASTIC SMALL–OUTLINE PACKAGE

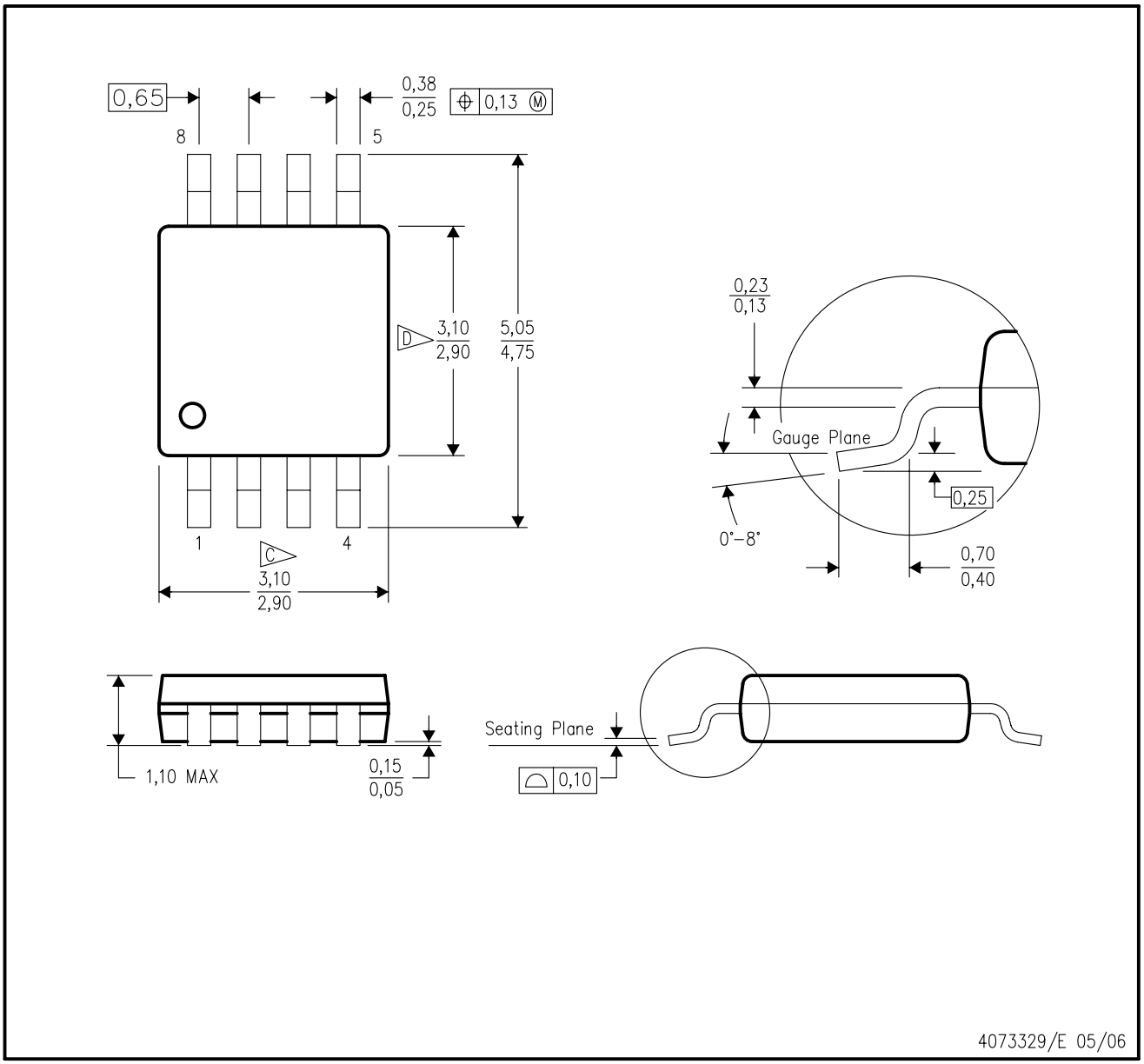

NOTES:
A. All linear dimensions are in millimeters.
B. This drawing is subject to change without notice.
C. Body length does not include mold flash, protrusions, or gate burrs. Mold flash, protrusions, or gate burrs shall not exceed 0.15 per end.
D. Body width does not include interlead flash. Interlead flash shall not exceed 0.50 per side.
E. Falls within JEDEC MO–187 variation AA, except interlead flash.

DGN (S-PDSO-G8) PowerPAD™ PLASTIC SMALL OUTLINE

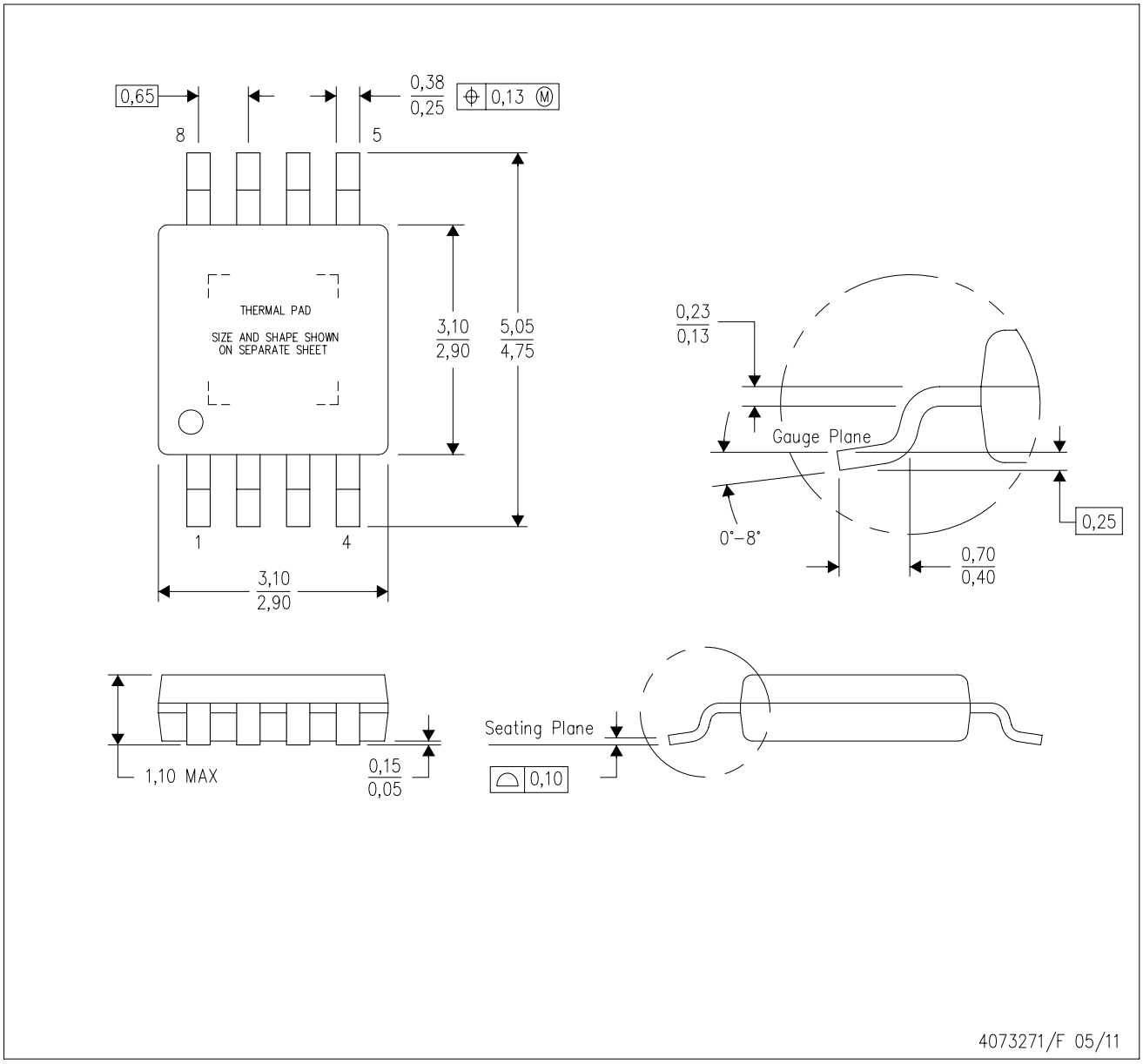

NOTES:
A. All linear dimensions are in millimeters.
B. This drawing is subject to change without notice.
C. Body dimensions do not include mold flash or protrusion.
D. This package is designed to be soldered to a thermal pad on the board. Refer to Technical Brief, PowerPad Thermally Enhanced Package, Texas Instruments Literature No. SLMA002 for information regarding recommended board layout. This document is available at www.ti.com <http://www.ti.com>.
E. See the additional figure in the Product Data Sheet for details regarding the exposed thermal pad features and dimensions.
F. Falls within JEDEC MO-187 variation AA-T

PowerPAD is a trademark of Texas Instruments.

DGN (S-PDSO-G8) PowerPAD™ PLASTIC SMALL OUTLINE

THERMAL INFORMATION

This PowerPAD™ package incorporates an exposed thermal pad that is designed to be attached to a printed circuit board (PCB). The thermal pad must be soldered directly to the PCB. After soldering, the PCB can be used as a heatsink. In addition, through the use of thermal vias, the thermal pad can be attached directly to the appropriate copper plane shown in the electrical schematic for the device, or alternatively, can be attached to a special heatsink structure designed into the PCB. This design optimizes the heat transfer from the integrated circuit (IC).

For additional information on the PowerPAD package and how to take advantage of its heat dissipating abilities, refer to Technical Brief, PowerPAD Thermally Enhanced Package, Texas Instruments Literature No. SLMA002 and Application Brief, PowerPAD Made Easy, Texas Instruments Literature No. SLMA004. Both documents are available at www.ti.com.

The exposed thermal pad dimensions for this package are shown in the following illustration.

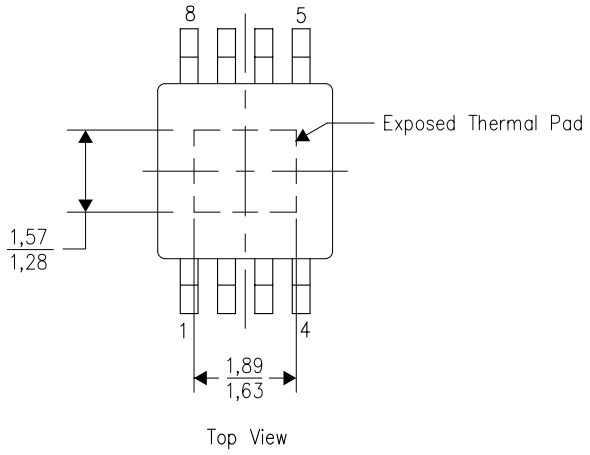

Exposed Thermal Pad Dimensions

4206323-2/I 12/11

NOTE: All linear dimensions are in millimeters

PowerPAD is a trademark of Texas Instruments

DGN (R–PDSO–G8) PowerPAD™ PLASTIC SMALL OUTLINE

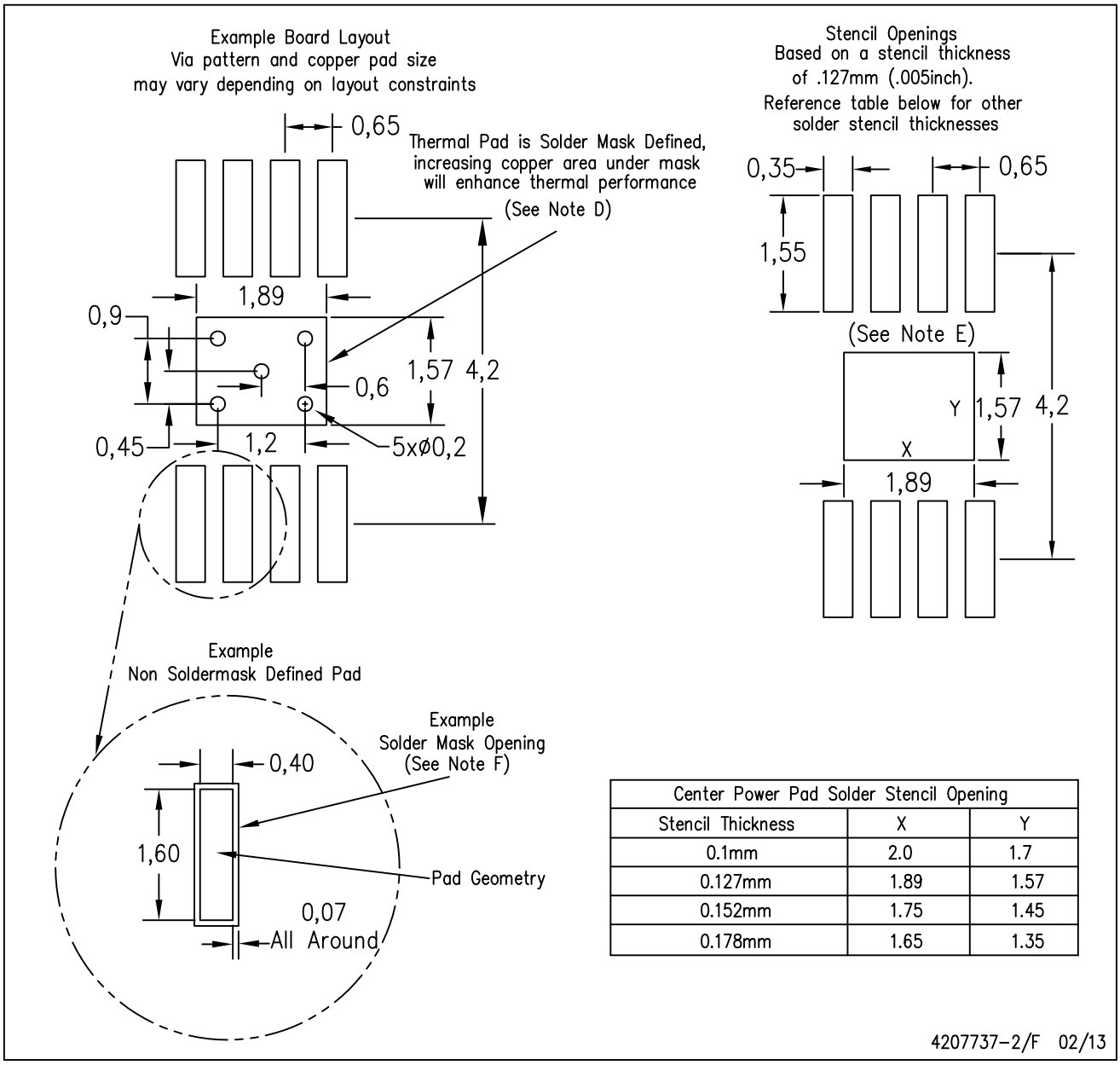

Center Power Pad Solder Stencil Opening		
Stencil Thickness	X	Y
0.1mm	2.0	1.7
0.127mm	1.89	1.57
0.152mm	1.75	1.45
0.178mm	1.65	1.35

NOTES:
A. All linear dimensions are in millimeters.
B. This drawing is subject to change without notice.
C. Customers should place a note on the circuit board fabrication drawing not to alter the center solder mask defined pad.
D. This package is designed to be soldered to a thermal pad on the board. Refer to Technical Brief, PowerPad Thermally Enhanced Package, Texas Instruments Literature No. SLMA002, SLMA004, and also the Product Data Sheets for specific thermal information, via requirements, and recommended board layout. These documents are available at www.ti.com <http://www.ti.com>.
E. Laser cutting apertures with trapezoidal walls and also rounding corners will offer better paste release. Customers should contact their board assembly site for stencil design recommendations. Example stencil design based on a 50% volumetric metal load solder paste. Refer to IPC–7525 for other stencil recommendations.
F. Customers should contact their board fabrication site for solder mask tolerances between and around signal pads.

PowerPAD is a trademark of Texas Instruments

IMPORTANT NOTICE

Texas Instruments Incorporated and its subsidiaries (TI) reserve the right to make corrections, enhancements, improvements and other changes to its semiconductor products and services per JESD46, latest issue, and to discontinue any product or service per JESD48, latest issue. Buyers should obtain the latest relevant information before placing orders and should verify that such information is current and complete. All semiconductor products (also referred to herein as “components”) are sold subject to TI’s terms and conditions of sale supplied at the time of order acknowledgment.

TI warrants performance of its components to the specifications applicable at the time of sale, in accordance with the warranty in TI’s terms and conditions of sale of semiconductor products. Testing and other quality control techniques are used to the extent TI deems necessary to support this warranty. Except where mandated by applicable law, testing of all parameters of each component is not necessarily performed.

TI assumes no liability for applications assistance or the design of Buyers’ products. Buyers are responsible for their products and applications using TI components. To minimize the risks associated with Buyers’ products and applications, Buyers should provide adequate design and operating safeguards.

TI does not warrant or represent that any license, either express or implied, is granted under any patent right, copyright, mask work right, or other intellectual property right relating to any combination, machine, or process in which TI components or services are used. Information published by TI regarding third-party products or services does not constitute a license to use such products or services or a warranty or endorsement thereof. Use of such information may require a license from a third party under the patents or other intellectual property of the third party, or a license from TI under the patents or other intellectual property of TI.

Reproduction of significant portions of TI information in TI data books or data sheets is permissible only if reproduction is without alteration and is accompanied by all associated warranties, conditions, limitations, and notices. TI is not responsible or liable for such altered documentation. Information of third parties may be subject to additional restrictions.

Resale of TI components or services with statements different from or beyond the parameters stated by TI for that component or service voids all express and any implied warranties for the associated TI component or service and is an unfair and deceptive business practice. TI is not responsible or liable for any such statements.

Buyer acknowledges and agrees that it is solely responsible for compliance with all legal, regulatory and safety-related requirements concerning its products, and any use of TI components in its applications, notwithstanding any applications-related information or support that may be provided by TI. Buyer represents and agrees that it has all the necessary expertise to create and implement safeguards which anticipate dangerous consequences of failures, monitor failures and their consequences, lessen the likelihood of failures that might cause harm and take appropriate remedial actions. Buyer will fully indemnify TI and its representatives against any damages arising out of the use of any TI components in safety-critical applications.

In some cases, TI components may be promoted specifically to facilitate safety-related applications. With such components, TI’s goal is to help enable customers to design and create their own end-product solutions that meet applicable functional safety standards and requirements. Nonetheless, such components are subject to these terms.

No TI components are authorized for use in FDA Class III (or similar life-critical medical equipment) unless authorized officers of the parties have executed a special agreement specifically governing such use.

Only those TI components which TI has specifically designated as military grade or “enhanced plastic” are designed and intended for use in military/aerospace applications or environments. Buyer acknowledges and agrees that any military or aerospace use of TI components which have ***not*** been so designated is solely at the Buyer's risk, and that Buyer is solely responsible for compliance with all legal and regulatory requirements in connection with such use.

TI has specifically designated certain components as meeting ISO/TS16949 requirements, mainly for automotive use. In any case of use of non-designated products, TI will not be responsible for any failure to meet ISO/TS16949.

Products		**Applications**	
Audio	www.ti.com/audio	Automotive and Transportation	www.ti.com/automotive
Amplifiers	amplifier.ti.com	Communications and Telecom	www.ti.com/communications
Data Converters	dataconverter.ti.com	Computers and Peripherals	www.ti.com/computers
DLP® Products	www.dlp.com	Consumer Electronics	www.ti.com/consumer-apps
DSP	dsp.ti.com	Energy and Lighting	www.ti.com/energy
Clocks and Timers	www.ti.com/clocks	Industrial	www.ti.com/industrial
Interface	interface.ti.com	Medical	www.ti.com/medical
Logic	logic.ti.com	Security	www.ti.com/security
Power Mgmt	power.ti.com	Space, Avionics and Defense	www.ti.com/space-avionics-defense
Microcontrollers	microcontroller.ti.com	Video and Imaging	www.ti.com/video
RFID	www.ti-rfid.com		
OMAP Applications Processors	www.ti.com/omap	**TI E2E Community**	e2e.ti.com
Wireless Connectivity	www.ti.com/wirelessconnectivity		

Mailing Address: Texas Instruments, Post Office Box 655303, Dallas, Texas 75265
Copyright © 2013, Texas Instruments Incorporated