LMH6718 Dual, High Output, Selectable Gain Buffer

Check for Samples: LMH6718

FEATURES

- **200mA Output Current**
- **.04%, .03° Differential Gain, Phase**
- **5.2mA Supply Current for 2 Amplifiers**
- **130MHz Bandwidth (A_V = +2)**
- **−88/−98dBc HD2/HD3 (1MHz)**
- **16ns Settling to 0.05%**
- **600V/µs Slew Rate**
- **Nominal Supply Range ±2.5V to ±6V**
- **Improved Replacement for CLC5632**

APPLICATIONS

- **Video Line Driver**
- **Coaxial Cable Driver**
- **Twisted Pair Driver**
- **Transformer/Coil Driver**
- **High Capacitive Load Driver**
- **Portable/Battery Powered Applications**
- **A/D Driver**
- **I/Q Channel Amplifier**

DESCRIPTION

The LMH6718 is a dual, low cost high speed (130MHz) buffer which features user selectable gains of +2, +1, and -1V/V. The LMH6718 also has a new output stage that delivers high output drive current (200mA), but consumes minimal quiescent supply current (2.6mA/Amp) from a ±5V supply. Its current feedback architecture, fabricated in an advanced complementary bipolar process, maintains consistent performance over a wide range of signal levels, and has a linear phase response up to one half of the -3dB frequency.

The LMH6718 offers 0.1dB gain flatness to 30MHz and differential gain and phase errors of .04% and .03°. These features are ideal for professional and consumer video applications.

The LMH6718 offers superior dynamic performance with a 130MHz small-signal bandwidth, 600V/µs slew rate and 4.2ns rise/fall times ($2V_{STEP}$). The combination of low quiescent current, high output current drive, and high speed performance makes the LMH6718 well suited for many battery powered personal communication/computing systems. The ability to drive low impedance, high capacitive loads, makes the LMH6718 ideal for single ended cable applications. It also drives low impedance loads with minimum distortion. The LMH6718 will drive a 100Ω load with only −84/−84dBc second/third harmonic distortion (A_V = +2, V_{OUT} = $2V_{PP}$, f = 1MHz). It is also optimized for driving high currents into single-ended transformers and coils. When driving the input of high resolution A/D converters, the LMH6718 provides excellent -88/-98dBc second/third harmonic distortion (A_V = +2, V_{OUT} = $2V_{PP}$, f = 1MHz, R_L = 1kΩ) and fast settling time.

The LMH6718 is fabricated using Texas Instruments's VIP10™ complimentary bipolar process.

Please be aware that an important notice concerning availability, standard warranty, and use in critical applications of Texas Instruments semiconductor products and disclaimers thereto appears at the end of this data sheet.

VIP10 is a trademark of Texas Instruments.
All other trademarks are the property of their respective owners.

PRODUCTION DATA information is current as of publication date. Products conform to specifications per the terms of the Texas Instruments standard warranty. Production processing does not necessarily include testing of all parameters.

Copyright © 2002–2013, Texas Instruments Incorporated

Connection Diagram

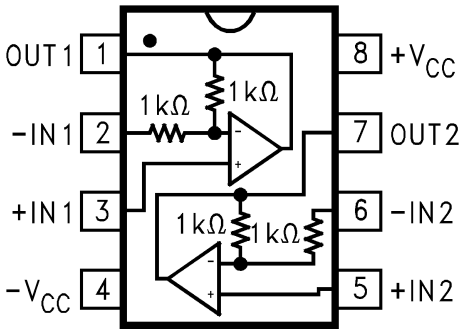

Figure 1. 8-Pin SOIC - Top View

Maximum Output Voltage vs. Load Resistance

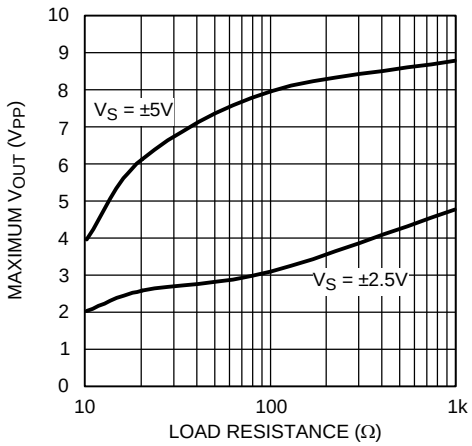

Figure 2.

These devices have limited built-in ESD protection. The leads should be shorted together or the device placed in conductive foam during storage or handling to prevent electrostatic damage to the MOS gates.

ABSOLUTE MAXIMUM RATINGS (1)(2)

ESD Tolerance (3)	Human Body Model	2kV
	Machine Model	200V
Supply Voltage		13.5
Output Current		See (4)
Common-Mode Input Voltage		V^+ - V^-
Maximum Junction Temperature		+150°C
Storage Temperature Range		−65°C to +150°C
Lead Temperature (Soldering 10 sec)		+300°C

(1) Absolute Maximum Ratings indicate limits beyond which damage to the device may occur. Operating Ratings indicate conditions for which the device is intended to be functional, but specific performance is not specified. For specifications, see the Electrical Characteristics tables.
(2) If Military/Aerospace specified devices are required, please contact the Texas Instruments Sales Office/ Distributors for availability and specifications.
(3) Human Body Model, applicable std. MIL-STD-883, Method 3015.7. Machine Model, applicable std. JESD22-A115-A (ESD MM std. of JEDEC) Field-Induced Charge-Device Model, applicable std. JESD22-C101-C (ESD FICDM std. of JEDEC).
(4) The maximum current is determined by device power dissipation limitations. See POWER DISSIPATION of APPLICATION INFORMATION for more details.

OPERATING RATINGS

Temperature Range (1)		−40°C to 85°C
Thermal Resistance		
Package	(θ_{JC})	(θ_{JA})
SOIC	50°C/W	145°C/W
Nominal Operating Voltage		±2.5V to ±6V
Operating Temperature Range		−40°C to +85°C

(1) The maximum power dissipation is a function of $T_{J(MAX)}$, θ_{JA}. The maximum allowable power dissipation at any ambient temperature is $P_D = (T_{J(MAX)} - T_A)/ \theta_{JA}$. All numbers apply for packages soldered directly onto a PC Board.

Copyright © 2002–2013, Texas Instruments Incorporated

+5V ELECTRICAL CHARACTERISTICS (1)

T_A = 25°C, A_V = +2, R_L = 100Ω, V_S = +5V (2), unless specified. **Boldface** limits apply at the temperature extremes.

Symbol	Parameter	Conditions	Min (3)	Typ (3)	Max (3)	Units
Frequency Domain Response						
SSBW	-3dB Bandwidth	V_O =0.5V_{PP}	70	110		MHz
		V_O =2.0V_{PP}		90		
SSBW	−0.1dB Bandwidth	V_O =0.5V_{PP}		23		MHz
GFP	Gain Peaking	<200MHz, V_O =0.5V_{PP}		0		dB
GFR	Gain Rolloff	<30MHz, V_O =0.5V_{PP}		0.2		dB
LPD	Linear Phase Deviation	<30MHz, V_O = 0.5V_{PP}		0.12		deg
Time Domain Response						
Tr	Rise and Fall Time	2V Step		4.8		ns
Ts	Settling Time to 0.05%	1V Step		20		ns
OS	Overshoot	2V Step		5		%
SR	Slew Rate	2V Step	250	400		V/µs
Distortion And Noise Response						
HD2	2nd Harmonic Distortion	2V_{PP}, 1MHz		−85		dBc
		2V_{PP}, 1MHz; R_L = 1kΩ		−88		
		2V_{PP}, 5MHz		−73		
HD3	3rd Harmonic Distortion	2V_{PP},1MHz		−89		dBc
		2V_{PP}, 1MHz, R_L = 1kΩ		−91		
		2V_{PP}, 5MHz		−71		
XTLKA	Crosstalk (Input Referred)	10MHz, 1V_{PP}		−85		dB
Static, DC Performance						
V_{IO}	Input Offset Voltage			±.6	±10 **±20**	mV
DV_{IO}	Average Drift			10		µV/°C
I_{BN}	Input Bias Current (Non-Inverting)			±.6	±15 **±20**	µA
DI_{BN}	Average Drift			20		nA/°C
GACC	Gain Accuracy			±0.3	±1.5 **±2.0**	%
	Internal Resistors (R_F, R_G)		750	950	1150	Ω
PSRR	Power supply Rejection Ratio	DC	50	60		dB
CMRR	Common Mode Rejection Ratio	DC	50 **47**	56		dB
I_{CC}	Supply Current per channel	R_L = ∞	2.0 **1.9**	2.4	3.0 **3.1**	mA
Miscellaneous Performance						
R_{IN}	Input Resistance (Non-Inverting)			0.38		MΩ
C_{IN}	Input Capacitance (Non-Inverting)			2.2		pF
V_{CMH}	Input Voltage Range, High			4.2		V
V_{CML}	Input Voltage Range, Low			0.8		V
V_{ROH}	Output Voltage Range, High	R_L = 100Ω	3.6 **3.5**	4.0		V

(1) Electrical Table values apply only for factory testing conditions at the temperature indicated. Factory testing conditions result in very limited self-heating of the device such that $T_J = T_A$. No specification of parametric performance is indicated in the electrical tables under conditions of internal self heating where $T_J > T_A$. See APPLICATION INFORMATION for information on temperature de-rating of this device." Min/Max ratings are based on product characterization and simulation. Individual parameters are tested as noted.

(2) $V_S = V_{CC} - V_{EE}$

(3) Typical values represent the most likely parametric norm as determined at the time of characterization. Actual typical values may vary over time and will also depend on the application and configuration. The typical values are not tested and are not ensured on shipped production material.

Copyright © 2002–2013, Texas Instruments Incorporated

+5V ELECTRICAL CHARACTERISTICS (1) (continued)

T_A = 25°C, A_V = +2, R_L = 100Ω, V_S = +5V (2), unless specified. **Boldface** limits apply at the temperature extremes.

Symbol	Parameter	Conditions	Min (3)	Typ (3)	Max (3)	Units
V_{ROL}	Output Voltage Range, Low	R_L = 100Ω	1.4 **1.3**	1.0		V
V_{ROH}	Output Voltage Range, High	R_L = ∞		4.1		V
V_{ROL}	Output Voltage Range, Low	R_L = ∞		0.9		V
I_O	Output Current (4)			170		mA
R_O	Output Resistance, Closed Loop	DC		.28		Ω

(4) The maximum current is determined by device power dissipation limitations. See POWER DISSIPATION of APPLICATION INFORMATION for more details.

±5V ELECTRICAL CHARACTERISTICS (1)

T_A = 25°C, A_V = +2, R_L = 100Ω, V_{CC} = ±5V; unless specified. **Boldface** limits apply at the temperature extremes.

Symbol	Parameter	Conditions	Min (2)	Typ (2)	Max (2)	Units
Frequency Domain Response						
SSBW	-3dB Bandwidth	V_O =1.0V_{PP}	100	130		MHz
		V_O =4.0V_{PP}		70		
SSBW	−0.1dB Bandwidth	V_O = 1.0V_{PP}		30		MHz
GFP	Gain Peaking	<200MHz, V_O = 1.0V_{PP}		0		dB
GFR	Gain Rolloff	<300MHz, V_O = 1.0V_{PP}		0.1		dB
LPD	Linear Phase Deviation	<30MHz, V_O = 1.0V_{PP}		0.1		deg
DG	Differential Gain	NTSC, R_L = 150Ω		.04		%
DP	Differential Phase	NTSC, R_L = 150Ω		.03		deg
Time Domain Response						
Tr	Rise and Fall Time	2V Step		4.2		ns
Ts	Settling Time to 0.05%	2V Step		17		ns
OS	Overshoot	2V Step		14		%
SR	Slew Rate	2V Step	400	600		V/µs
Distortion And Noise Response						
HD2	2nd Harmonic Distortion	2V_{PP},1MHz		−84		dBc
		2V_{PP}, 1MHz; R_L =1kΩ		−88		
		2V_{PP}, 5MHz		−73		
HD3	3rd Harmonic Distortion	2V_{PP},1MHz		−84		dBc
		2V_{PP}, 1MHz; R_L = 1kΩ		−98		
		2V_{PP}, 5MHz		−76		
	Equivalent Input Noise					
V_N	Voltage (e_{ni})	>1MHz		8		nV/√Hz
I_{NN}	Non-Inverting Current (i_{bn})	>1MHz		9		pA/√Hz
XTLKA	Crosstalk (Input Referred)	10MHz, 1V_{PP}		−85		dB
Static, DC Performance						
V_{IO}	Input Offset Voltage			.2	±9.5 **±15**	mV
DV_{IO}	Average Drift			5		µV/°C

(1) Electrical Table values apply only for factory testing conditions at the temperature indicated. Factory testing conditions result in very limited self-heating of the device such that T_J = T_A. No specification of parametric performance is indicated in the electrical tables under conditions of internal self heating where T_J > T_A. See APPLICATION INFORMATION for information on temperature de-rating of this device." Min/Max ratings are based on product characterization and simulation. Individual parameters are tested as noted.

(2) Typical values represent the most likely parametric norm as determined at the time of characterization. Actual typical values may vary over time and will also depend on the application and configuration. The typical values are not tested and are not ensured on shipped production material.

Copyright © 2002–2013, Texas Instruments Incorporated

±5V ELECTRICAL CHARACTERISTICS [1] (continued)

T_A = 25°C, A_V = +2, R_L = 100Ω, V_{CC} = ±5V; unless specified. **Boldface** limits apply at the temperature extremes.

Symbol	Parameter	Conditions	Min [2]	Typ [2]	Max [2]	Units
I_{BN}	Input Bias Current (Non-Inverting)			1.3	±15 **±20**	µA
DI_{BN}	Average Drift			12		nA/°C
GACC	Gain Accuracy			±0.3	±1.5 **±2.0**	%
	Internal Resistor (R_F, R_G)		750	950	1150	Ω
PSRR	Power Supply Rejection Ratio	DC	50	62		dB
CMRR	Common Mode Rejection Ratio	DC	52 **49**	57		dB
I_{CC}	Supply Current per channel	R_L = ∞	2.2 **2.1**	2.6	3.3 **3.4**	mA
Miscellaneous Performance						
R_{IN}	Input Resistance (Non-Inverting)			0.50		MΩ
C_{IN}	Input Capacitance (Non-Inverting)			1.9		pF
CMVR	Common-Mode Voltage Range			±4.2		V
V_{RO}	Output Voltage Range	R_L = 100Ω	3.6 **3.5**	±3.8		V
V_{RO}	Output Voltage Range	R_L = ∞		±4.0		V
I_O	Output Current [3]			200		mA
R_O	Output Resistance, Closed Loop	DC		.28		Ω

(3) The maximum current is determined by device power dissipation limitations. See POWER DISSIPATION of APPLICATION INFORMATION for more details.

Copyright © 2002–2013, Texas Instruments Incorporated

TYPICAL PERFORMANCE CHARACTERISTICS

(A_V = +2, R_L = 100Ω, Unless Specified).

Frequency Response vs. Gain

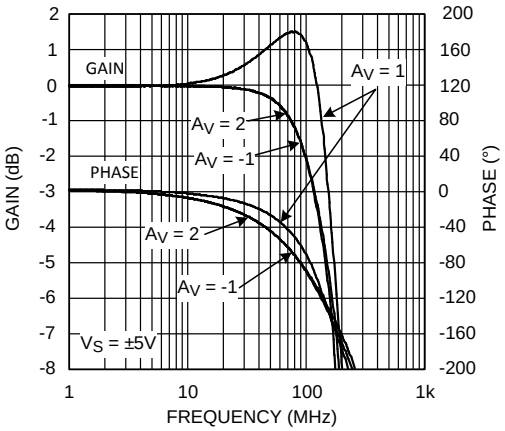

Figure 3.

Frequency Response

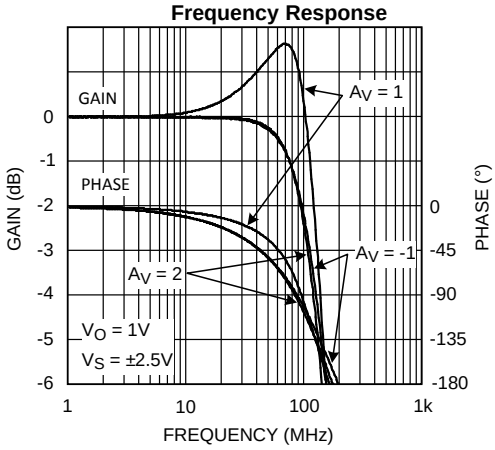

Figure 4.

Frequency Response R_L

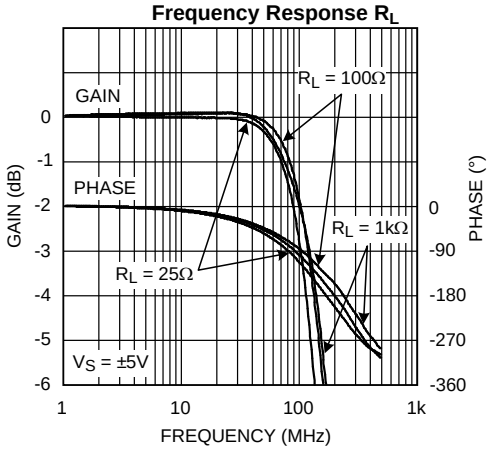

Figure 5.

Frequency Response vs. R_L

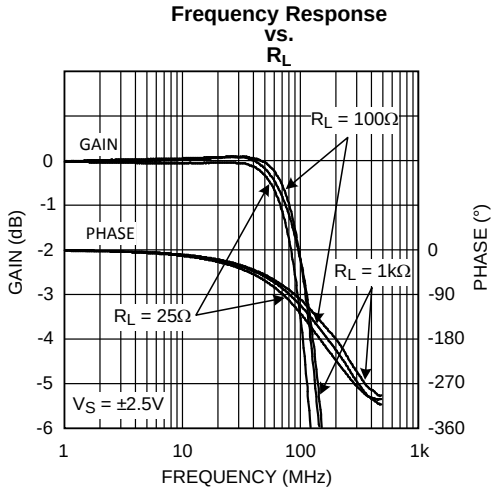

Figure 6.

Gain Flatness & Linear Phase

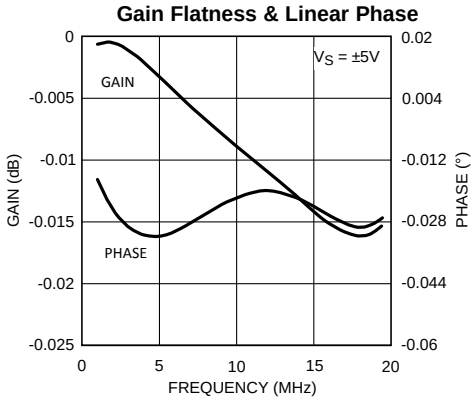

Figure 7.

Gain Flatness & Linear Phase

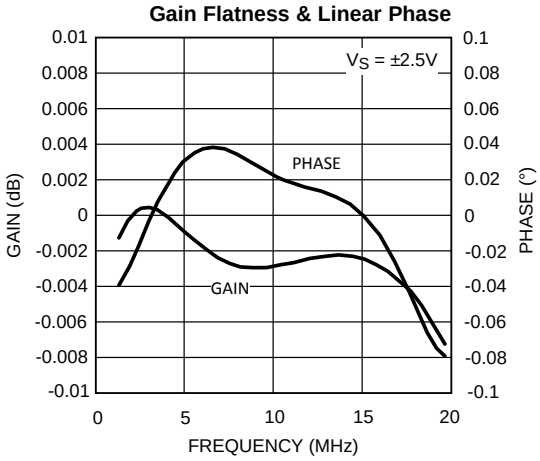

Figure 8.

Copyright © 2002–2013, Texas Instruments Incorporated

TYPICAL PERFORMANCE CHARACTERISTICS (continued)

(A_V = +2, R_L = 100Ω, Unless Specified).

Frequency Response vs. V_O (A_V = 2)

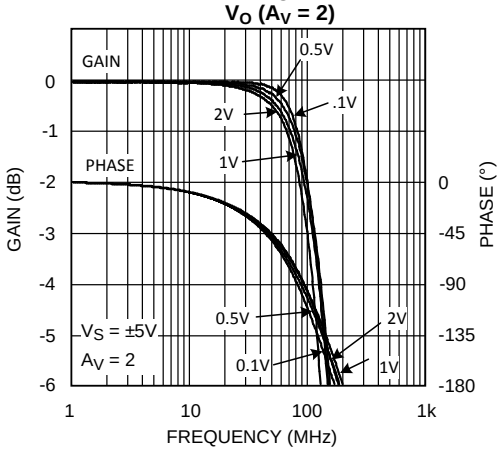

Figure 9.

Frequency Response vs. V_O (A_V = 2)

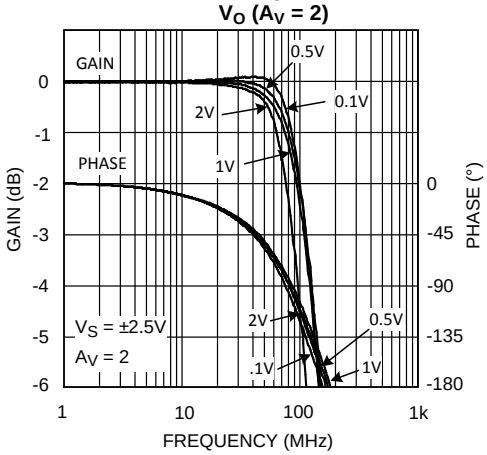

Figure 10.

Frequency Response vs. V_O (A_V = 1)

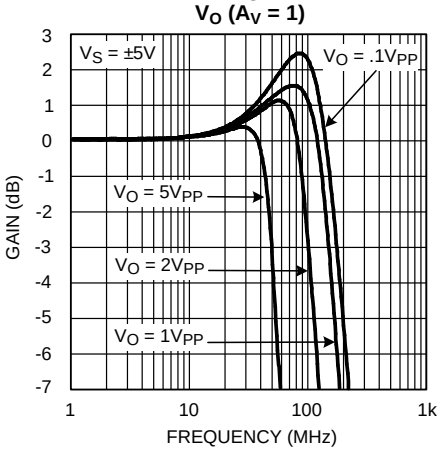

Figure 11.

Frequency Response vs. V_O (A_V = 1)

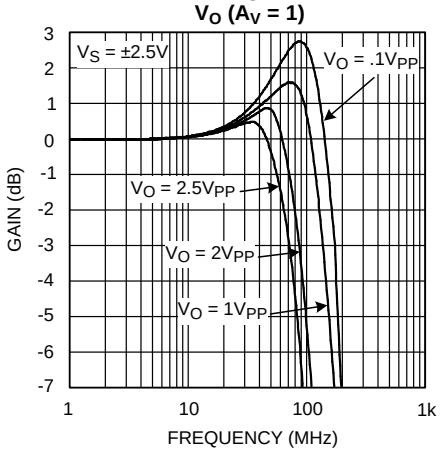

Figure 12.

Frequency Response vs. V_O (A_V = −1)

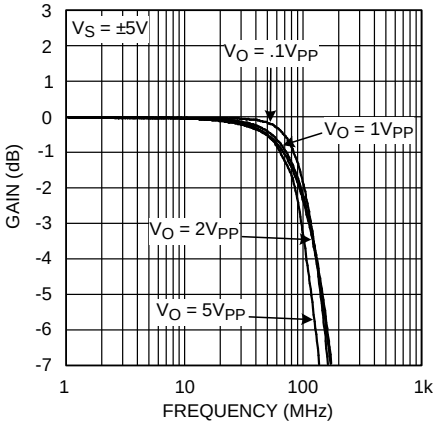

Figure 13.

Frequency Response vs. V_O (A_V = −1)

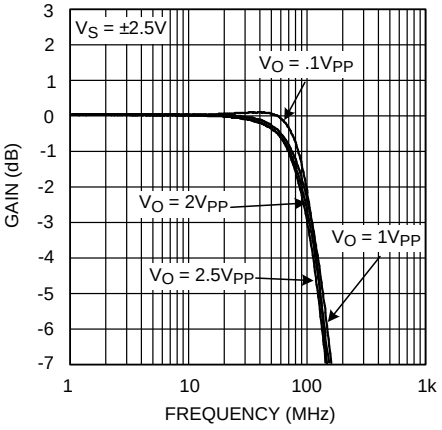

Figure 14.

TYPICAL PERFORMANCE CHARACTERISTICS (continued)

(A_V = +2, R_L = 100Ω, Unless Specified).

PSRR & CMRR

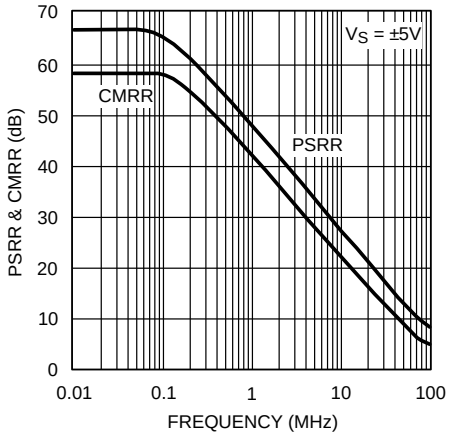

Figure 15.

PSRR & CMRR

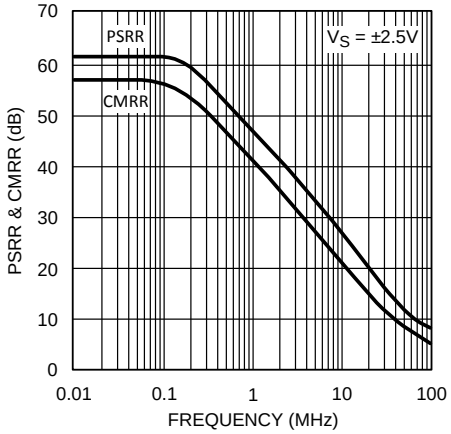

Figure 16.

2nd & 3rd Harmonic Distortion vs. Frequency

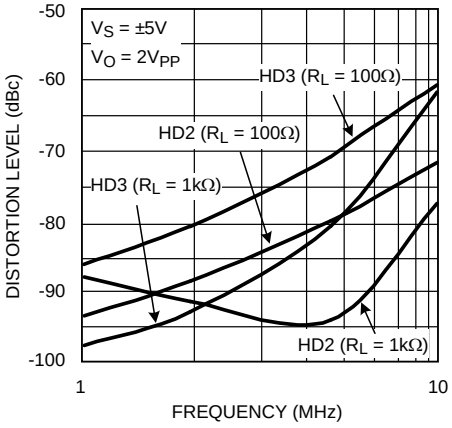

Figure 17.

2nd & 3rd Harmonic Distortion vs. Frequency

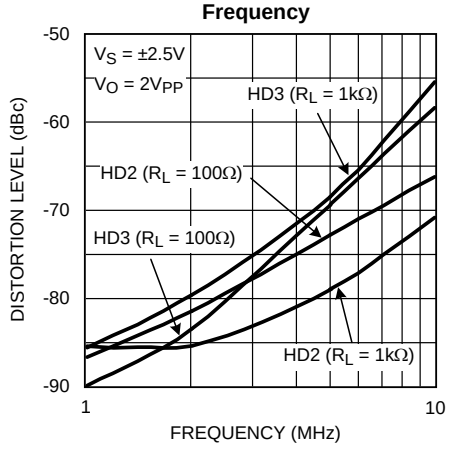

Figure 18.

2nd & 3rd Harmonic Distortion R_L = 25Ω

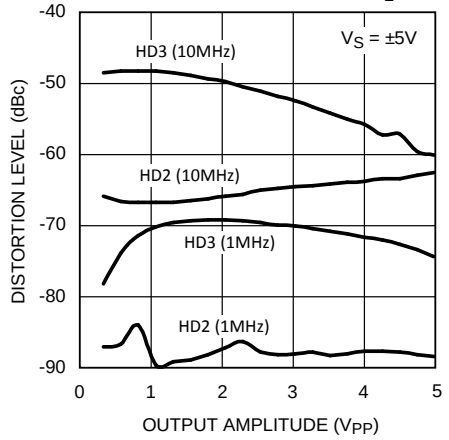

Figure 19.

2nd & 3rd Harmonic Distortion R_L = 25Ω

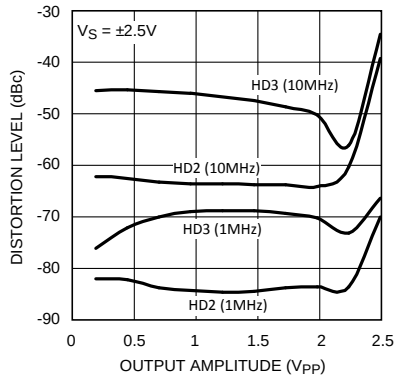

Figure 20.

Copyright © 2002–2013, Texas Instruments Incorporated

TYPICAL PERFORMANCE CHARACTERISTICS (continued)

(A_V = +2, R_L = 100Ω, Unless Specified).

2nd & 3rd Harmonic Distortion R_L = 100Ω

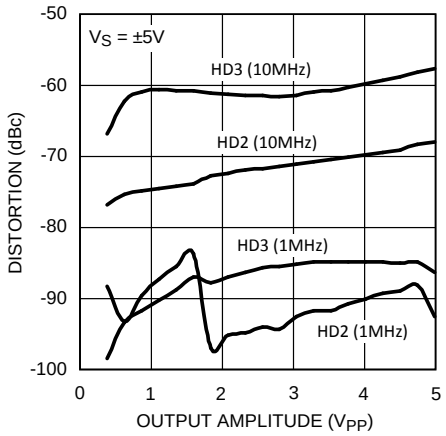

Figure 21.

2nd & 3rd Harmonic Distortion R_L = 100Ω

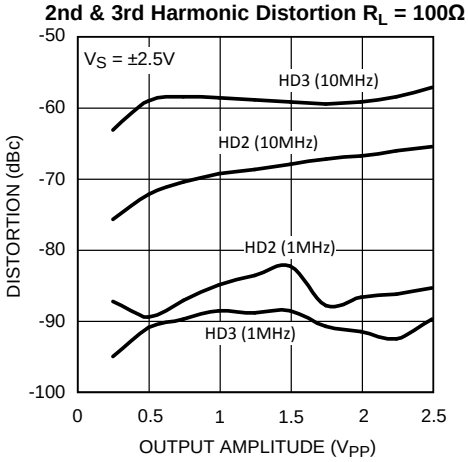

Figure 22.

2nd & 3rd Harmonic Distortion R_L = 1kΩ

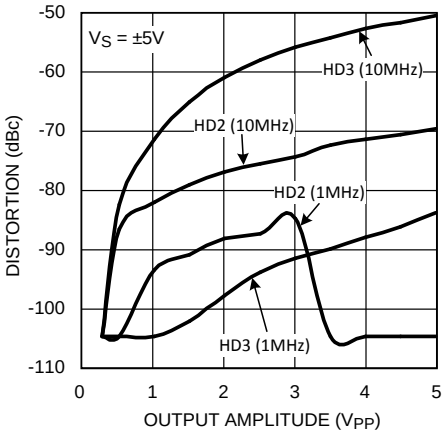

Figure 23.

2nd & 3rd Harmonic Distortion R_L = 1kΩ

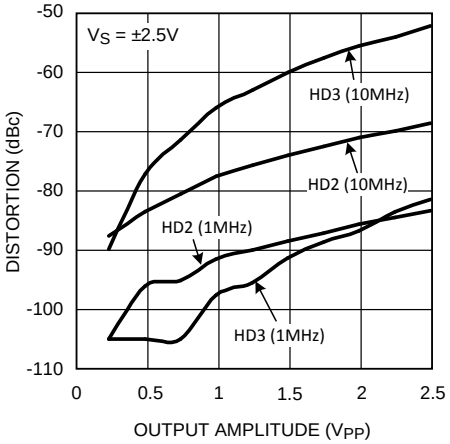

Figure 24.

Pulse Response

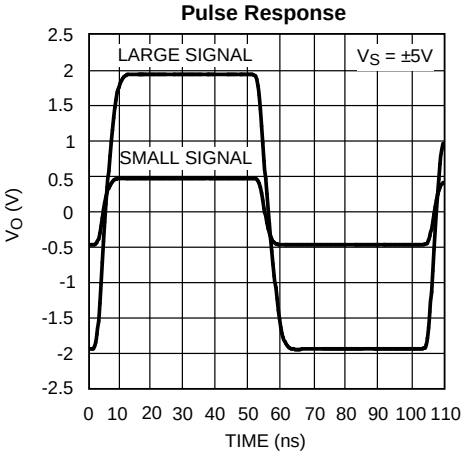

Figure 25.

Pulse Response

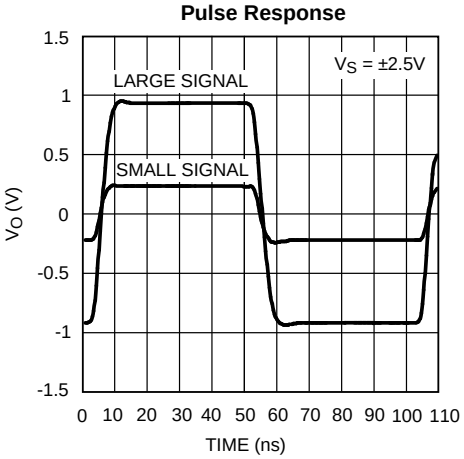

Figure 26.

Copyright © 2002–2013, Texas Instruments Incorporated

TYPICAL PERFORMANCE CHARACTERISTICS (continued)

(A_V = +2, R_L = 100Ω, Unless Specified).

Closed Loop Output Resistance

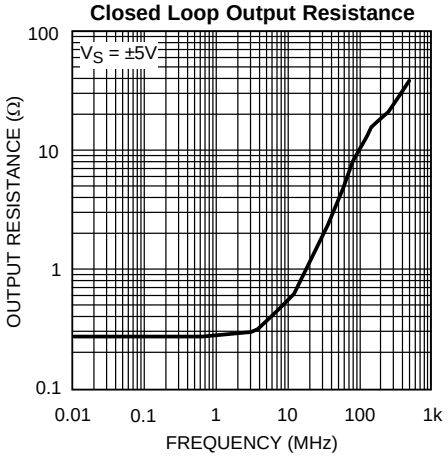

Figure 27.

Closed Loop Output Resistance

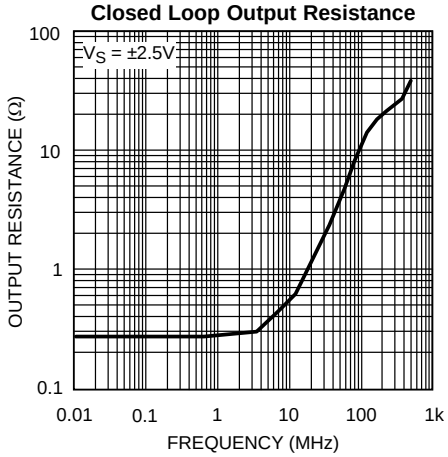

Figure 28.

I_{BN} &V_{IO} vs. Temperature

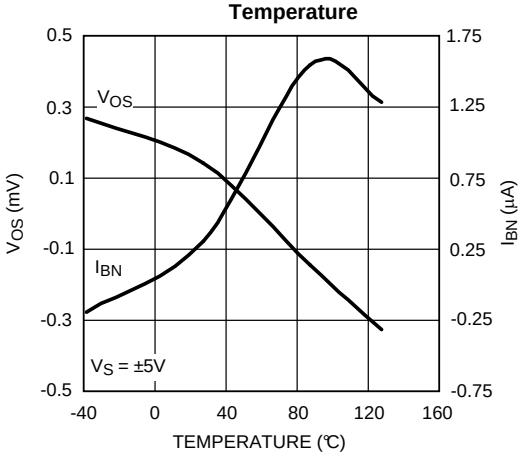

Figure 29.

I_{BN} &V_{IO} vs. Temperature

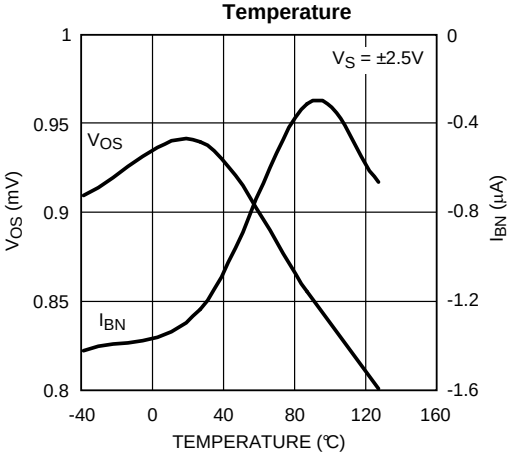

Figure 30.

Settling Time vs. Accuracy

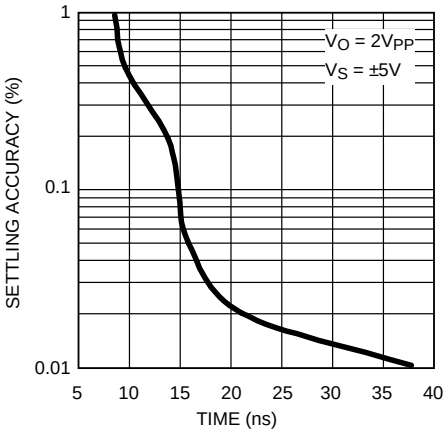

Figure 31.

Channel Matching

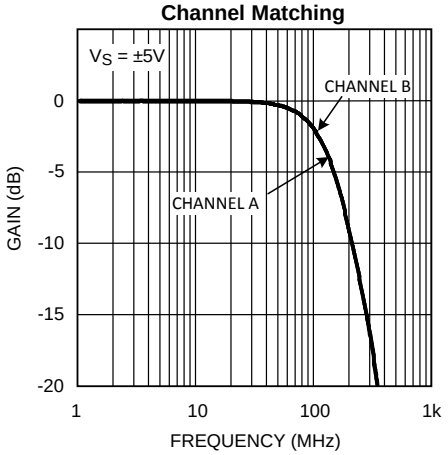

Figure 32.

Copyright © 2002–2013, Texas Instruments Incorporated

TYPICAL PERFORMANCE CHARACTERISTICS (continued)

(A_V = +2, R_L = 100Ω, Unless Specified).

Differential Gain & Phase

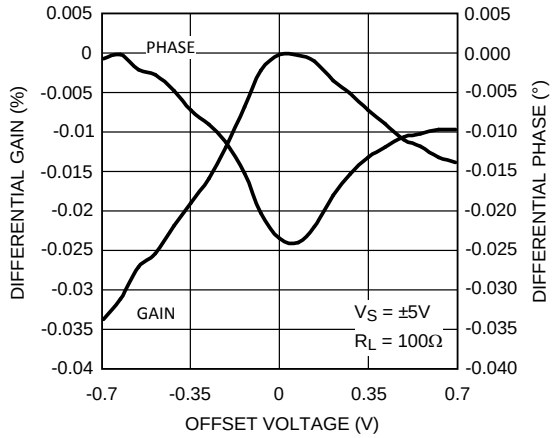

Figure 33.

Input Referred Crosstalk

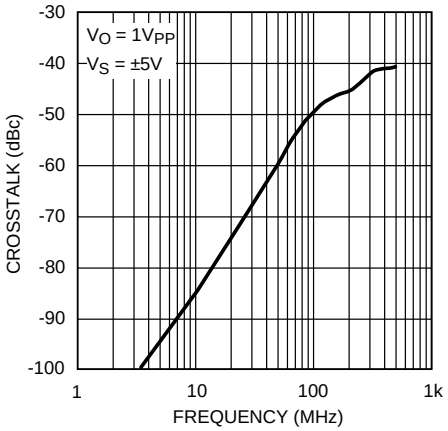

Figure 34.

APPLICATION INFORMATION

LMH6718 OPERATION

The LMH6718 is a current feedback buffer fabricated in an advanced complementary bipolar process. The LMH6718 operates from a single 5V supply or dual ±5V supplies. Operating from a single 5V supply, the LMH6718 has the following features:

- Gains of ±1, −1, and 2V/V are achievable without external resistors
- Provides 170mA of output current
- Offers low −88/−91dBc 2nd & 3rd harmonic distortion
- Provides BW > 110MHz

The LMH6718 performance is further enhanced in ±5V supply applications as indicated in ±5V ELECTRICAL CHARACTERISTICS and TYPICAL PERFORMANCE CHARACTERISTICS.

LMH6718 DESIGN INFORMATION
CLOSED LOOP GAIN SELECTION

The LMH6718 is a current feedback op amp with R_F = R_G = 1kΩ on chip (in the package). Select from three closed loop gains without using any external gain or feedback resistors. Implement gains of +2, +1, and −1V/V by connecting pins 2 and 3 (or 5 and 6) as described in the chart below.

Gain A_V	Input Connections	
	Non-Inverting (pins 3, 5)	**Inverting (pins 2, 6)**
−1V/V	ground	input signal
+1V/V	input signal	NC (open)
+2V/V	input signal	ground

The gain accuracy of the LMH6718 is excellent and stable over temperature change. The internal gain setting resistors, R_F and R_G are poly silicon resistors. Although their absolute values change with processing and temperature, their ratio (R_F/R_G) remains constant. If an external resistor is used in series with R_G, gain accuracy over temperature will suffer.

SINGLE SUPPLY OPERATION (V_{CC} = +5V, V_{EE} = GND)

The specifications given in ±5V ELECTRICAL CHARACTERISTICS for single supply operation are measured with a common mode voltage (V_{CM}) of 2.5V. V_{CM} is the voltage around which the inputs are applied and the output voltages are specified.

Operating from a single +5V supply, the Common Mode Voltage Range (CMVR) of the LMH6718 is typically +0.8V to +4.2V. The typical output range with R_L = 100Ω is +1.0V to +4.0V.

For single supply DC coupled operation, keep input signal levels above 0.8V DC, AC coupling and level shifting the signal are recommended. The non-inverting and inverting configurations for both input conditions are illustrated in the following 2 sections.

Copyright © 2002–2013, Texas Instruments Incorporated

DC COUPLED SINGLE SUPPLY OPERATION

Figure 35, Figure 36, and Figure 37 on the following page, show the recommended configurations for input signals that remain above 0.8V DC.

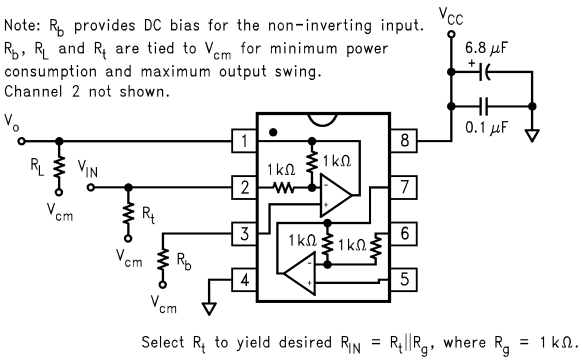

Figure 35. DC Coupled, A_V = −1V/V Configuration

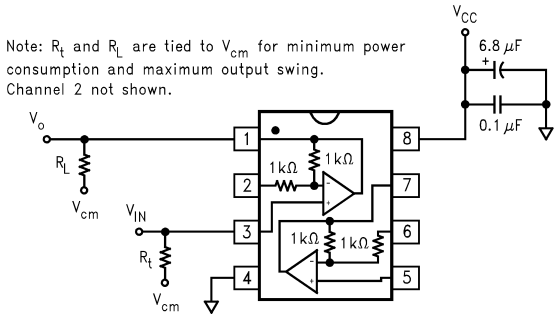

Figure 36. DC Coupled, A_V = +1V/V Configuration

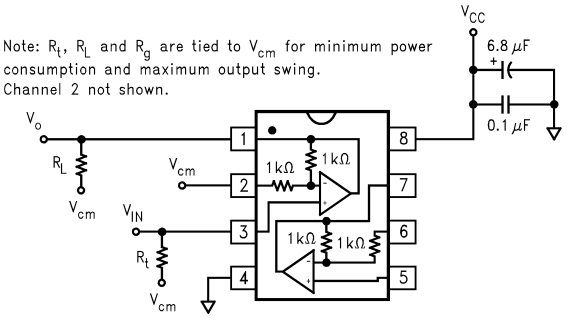

Figure 37. DC Coupled, A_V = +2V/V Configuration

Copyright © 2002–2013, Texas Instruments Incorporated

AC COUPLED SINGLE SUPPLY OPERATION

Figure 38, Figure 39, and Figure 40 show possible non-inverting and inverting configurations for input signals that go below 0.8V DC.

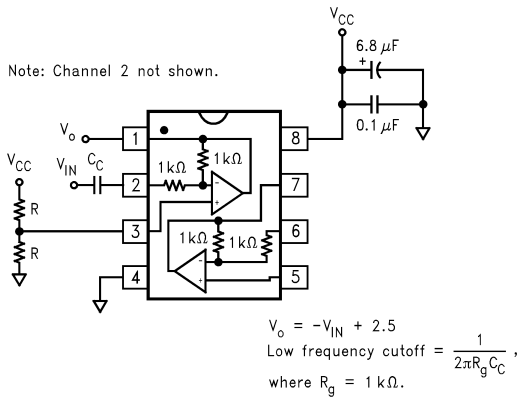

Figure 38. AC Coupled, A_V = −1V/V Configuration

The input is AC coupled to prevent the need for level shifting the input signal at the source. The resistive voltage divider biases the non-inverting input to $V_{CC} \div 2 = 2.5V$ (For V_{CC} = +5V)

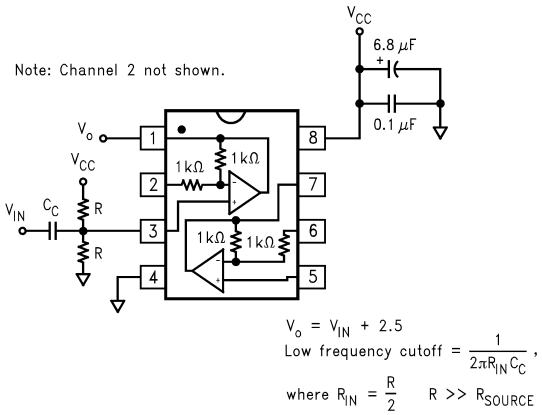

Figure 39. AC Coupled, A_V = +1V/V Configuration

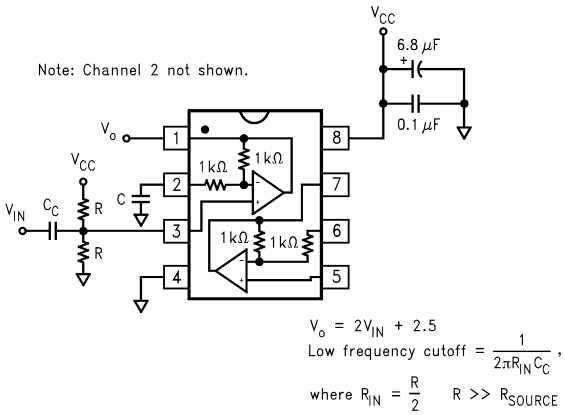

Figure 40. AC Coupled, A_V = +2V/V Configuration

Copyright © 2002–2013, Texas Instruments Incorporated

DUAL SUPPLY OPERATION

The LMH6718 operates on dual supplies as well as single supplies. The non-inverting and inverting configurations are shown in Figure 41, Figure 42, and Figure 43.

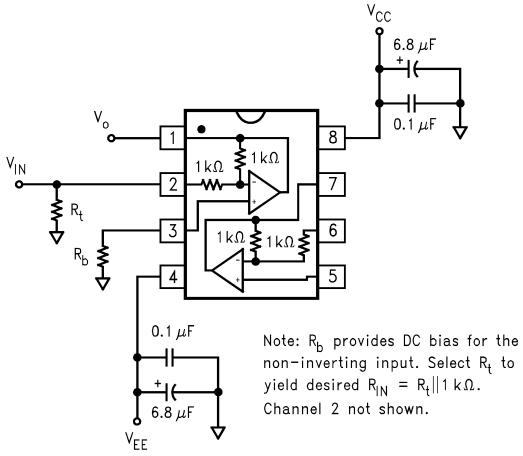

Figure 41. Dual Supply, A_V = −1V/V Configuration

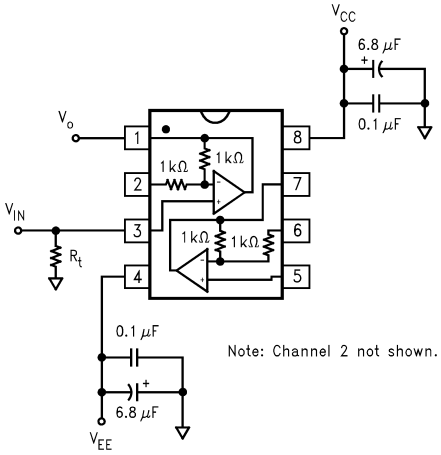

Figure 42. Dual Supply, A_V = +1V/V Configuration

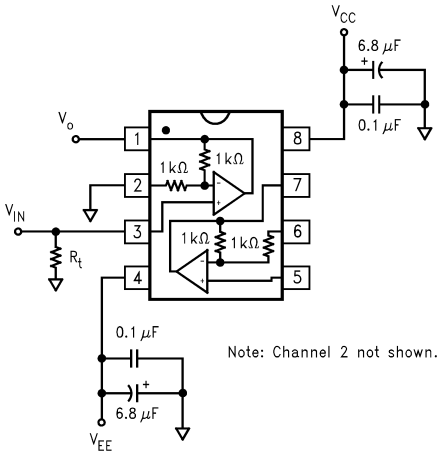

Figure 43. Dual Supply, A_V = +2V/V Configuration

Copyright © 2002–2013, Texas Instruments Incorporated

LOAD TERMINATION

The LMH6718 can source and sink nearly equal amounts of current.

DRIVING CABLES AND CAPACITIVE LOADS

When driving cables, double termination is used to prevent reflections. For capacitive load applications, a small series resistor at the output of the LMH6718 will improve stability and settling performance. Figure 44, shown below in Figure 44, gives the recommended series resistance value for optimum flatness at various capacitive loads.

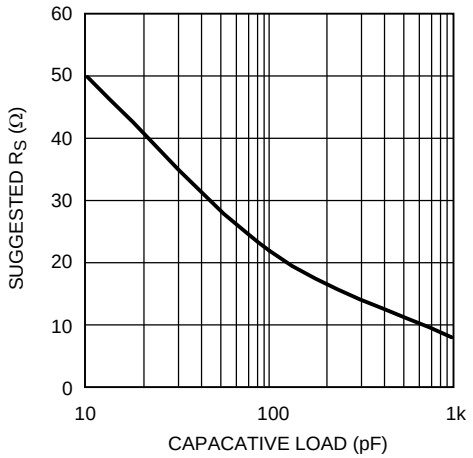

Figure 44. Suggested R_S vs. C_L

TRANSMISSION LINE MATCHING

One method for matching the characteristic impedance (Z_O) of a transmission line or cable is to place the appropriate resistor at the input or output of the amplifier. Figure 45 shows typical inverting and non-inverting circuit configurations for matching transmission lines.

Non-Inverting gain applications:

- Connect pin 2 as indicated in the table in LMH6718 Design Information Closed Loop Gain Selection.
- Make R_1, R_2, R_6, and R_7 equal to Z_O.
- Use R_3 to isolate the amplifier from reactive loading caused by the transmission line, or by parasitics.

Inverting gain applications:

- Connect R_3 directly to ground.
- Make the resistors R_4, R_6, and R_7 equal to Z_O.
- Make $R_5 \parallel R_g = Z_O$.

The input and output matching resistors attenuate the signal by a factor of 2, therefore additional gain is needed. Use C6 to match the output transmission line over a greater frequency range. C6 compensates for the increase of the amplifier's output impedance with frequency.

Copyright © 2002–2013, Texas Instruments Incorporated

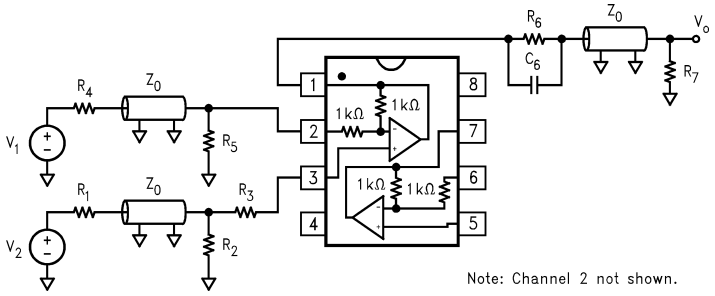

Figure 45. Transmission Line Matching

POWER DISSIPATION

Follow these steps to determine the power consumption of the LMH6718:

1. Calculate the quiescent (no-load) power: $P_{amp} = I_{CC} (V_{CC} - V_{EE})$
2. Calculate the RMS power at the output stage:

$P_O = (V_{CC} - V_{LOAD}) (I_{LOAD})$

where

- V_{LOAD} and I_{LOAD} are the voltage and current across the external load (1)

3. Calculate the total RMS power:

$P_t = P_{amp} + P_O$ (2)

The maximum power that the SOIC, package can dissipate at a given temperature is illustrated in Figure 46. The power derating curve for any LMH6718 package can be derived by utilizing the following equation:

$$\frac{(150° - T_{amb})}{\theta_{JA}}$$

where

- T_{amb} = Ambient temperature (°C)
- θ_{JA} = Thermal resistance, from junction to ambient, for a given package (°C/W) (3)

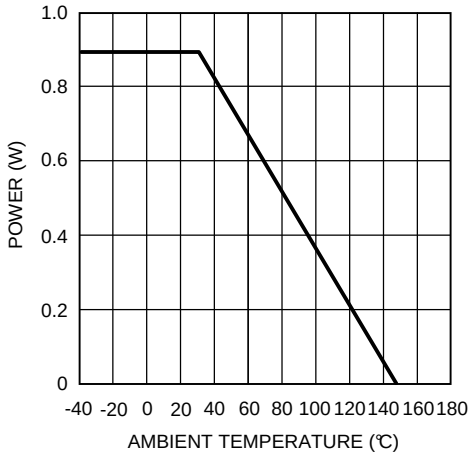

Figure 46. Power Derating Curve

LAYOUT CONSIDERATIONS

A proper printed circuit layout is essential for achieving high frequency performance. Texas Instruments provides evaluation boards for the LMH6718 (CLC730036-SOIC) and suggests their use as a guide for high frequency layout and as an aid for device testing and characterization.

General layout and supply bypassing play major roles in high frequency performance. Follow the steps below as a basis for high frequency layout:

- Include 6.8µF tantalum and 0.1µF ceramic capacitors on both supplies.
- Place the 6.8µF capacitors within 0.75 inches of the power pins.
- Place the 0.1µF capacitors less than 0.1 inches from the power pins.
- Remove the ground plane under and around the part, especially near the input and output pins to reduce parasitic capacitance.
- Minimize all trace lengths to reduce series inductances.
- Use flush-mount printed circuit board pins for prototyping, never use high profile DIP sockets.

Copyright © 2002–2013, Texas Instruments Incorporated

EVALUATION BOARD INFORMATION

A datasheet is available for the CLC730036 evaluation board. The evaluation board data sheets provide:

- Evaluation board schematics
- Evaluation board layouts
- General information about the boards

The evaluation boards are designed to accommodate dual supplies. The boards can be modified to provide single supply operation. For best performance;

1. Do not connect the unused supply
2. Ground the unused supply pin

SPECIAL EVALUATION BOARD CONSIDERATION FOR THE LMH6718

To optimize off-isolation of the LMH6718, cut the R_f trace on the CLC730036 evaluation boards. This cut minimizes capacitive feedthrough between the input and the output. Figure 47 shows where to cut both evaluation boards for improved off-isolation.

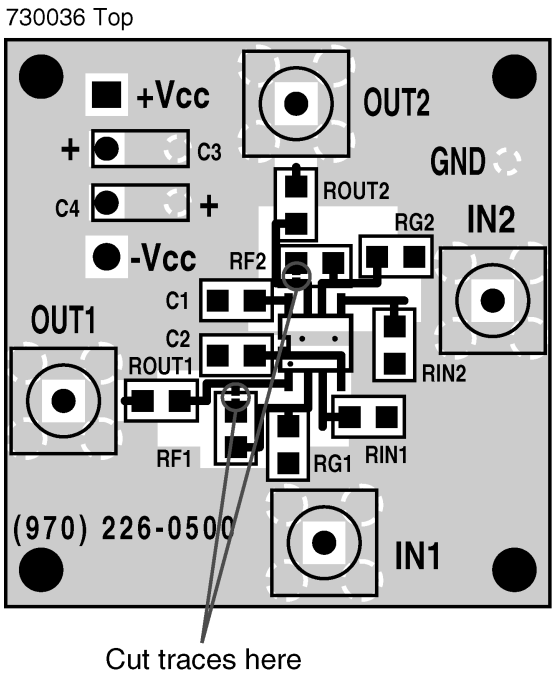

Figure 47. Evaluation Board Changes

Application Circuits

SINGLE SUPPLY CABLE DRIVER

Figure 48 below shows the LMH6718 driving 10m of 75Ω coaxial cable. The LMH6718 is set for a gain of +2V/V to compensate for the divide-by-two voltage drop at V_O. The response after 10m of cable is illustrated in Figure 49

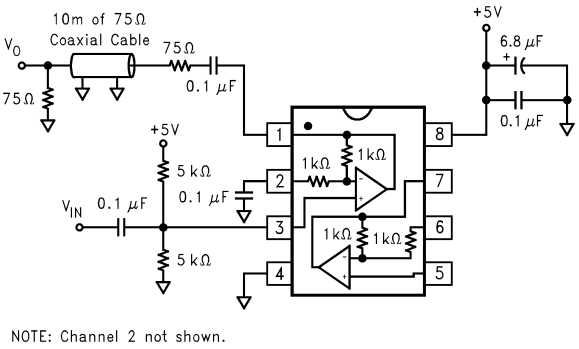

Figure 48. Single Supply Cable Driver

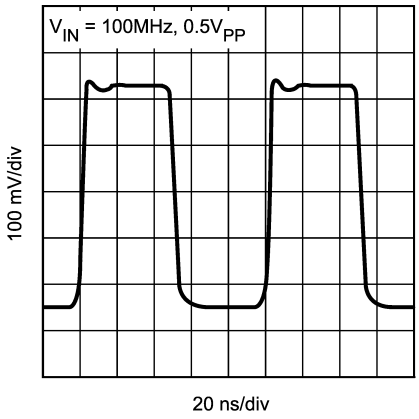

Figure 49. Response After 10m of Cable

DIFFERENTIAL LINE DRIVER WITH LOAD IMPEDANCE CONVERSION

The circuit shown in Figure 50, operates as a differential line driver. The transformer converts the load impedance to a value that best matches the LMH6718's output capabilities. The single-ended input signal is converted to a differential signal by the LMH6718. The line's characteristic impedance is matched at both the input and the output. The schematic shows Unshielded Twisted Pair for the transmission line; other types of lines can also be driven.

Copyright © 2002–2013, Texas Instruments Incorporated

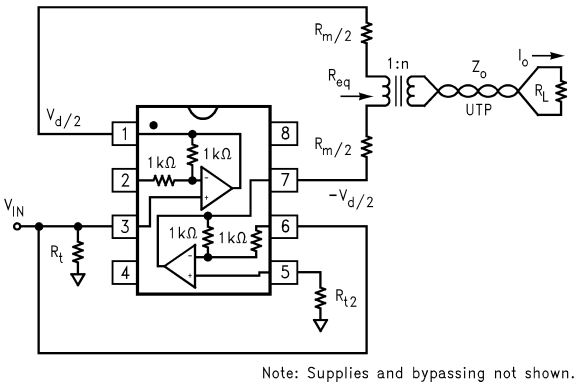

Figure 50. Differential Line Driver with Load Impedance Conversion

Set up the LMH6718 as a difference amplifier:

- Set the Channel 1 amplifier to a gain of +1V/V
- Set the Channel 2 amplifier to a gain of −1V/V

Make the best use of the LMH6718's output drive capability as follows:

$$R_m + R_{eq} = \frac{2 \cdot V_{max}}{I_{max}} \tag{4}$$

where

- R_{eq} is the transformed value of the load impedance
- V_{max} is the output Voltage Range
- I_{max} is the maximum Output Current

Match the line's characteristic impedance:

$$R_L = Z_O$$
$$R_M = R_{EQ}$$
$$N = \sqrt{\frac{R_L}{R_{EQ}}} \tag{5}$$

Select the transformer so that it loads the line with a value very near Z_O over frequency range. The output impedance of the LMH6718 also affects the match. With an ideal transformer we obtain:

$$\text{Return Loss} = -20 \cdot \log_{10} \left| \frac{n^2 \cdot Z_0(j\omega)}{Z_0} \right|, \text{ dB}$$

where

- $Z_O(6718)(j\omega)$ is the output impedance of the LMH6718
- $|Z_O(6718)(j\omega)| << R_m$

(6)

The load voltage and current will fall in the ranges:

$$\left| V_O \right| \leq n \cdot V_{max}$$
$$\left| I_O \right| \leq \frac{I_{max}}{n} \tag{7}$$

The LMH6718's high output drive current and low distortion make it a good choice for this application.

Copyright © 2002–2013, Texas Instruments Incorporated

DIFFERENTIAL INPUT/DIFFERENTIAL OUTPUT AMPLIFIER

Figure 51 below illustrates a differential input/differential output configuration. The bypass capacitors are the only external components required.

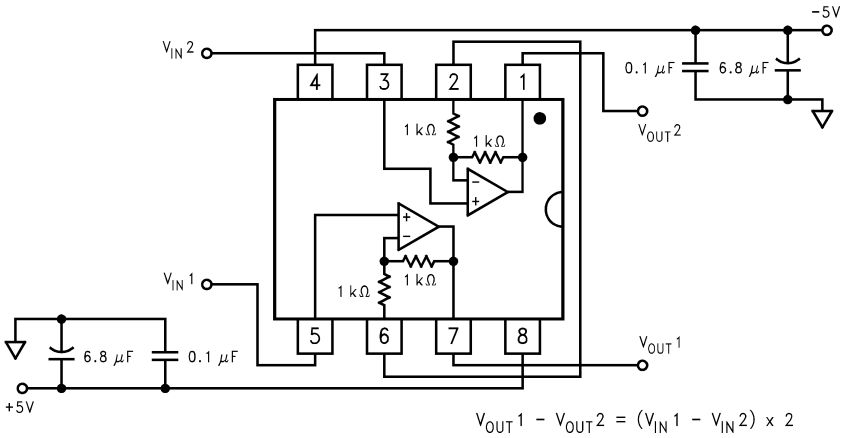

Figure 51. Differential Input/Differential Output Amplifier

Copyright © 2002–2013, Texas Instruments Incorporated

REVISION HISTORY

Changes from Revision F (April 2013) to Revision G	Page
• Changed layout of National Data Sheet to TI format	22

Copyright © 2002–2013, Texas Instruments Incorporated

IMPORTANT NOTICE

Texas Instruments Incorporated and its subsidiaries (TI) reserve the right to make corrections, enhancements, improvements and other changes to its semiconductor products and services per JESD46, latest issue, and to discontinue any product or service per JESD48, latest issue. Buyers should obtain the latest relevant information before placing orders and should verify that such information is current and complete. All semiconductor products (also referred to herein as “components”) are sold subject to TI’s terms and conditions of sale supplied at the time of order acknowledgment.

TI warrants performance of its components to the specifications applicable at the time of sale, in accordance with the warranty in TI’s terms and conditions of sale of semiconductor products. Testing and other quality control techniques are used to the extent TI deems necessary to support this warranty. Except where mandated by applicable law, testing of all parameters of each component is not necessarily performed.

TI assumes no liability for applications assistance or the design of Buyers’ products. Buyers are responsible for their products and applications using TI components. To minimize the risks associated with Buyers’ products and applications, Buyers should provide adequate design and operating safeguards.

TI does not warrant or represent that any license, either express or implied, is granted under any patent right, copyright, mask work right, or other intellectual property right relating to any combination, machine, or process in which TI components or services are used. Information published by TI regarding third-party products or services does not constitute a license to use such products or services or a warranty or endorsement thereof. Use of such information may require a license from a third party under the patents or other intellectual property of the third party, or a license from TI under the patents or other intellectual property of TI.

Reproduction of significant portions of TI information in TI data books or data sheets is permissible only if reproduction is without alteration and is accompanied by all associated warranties, conditions, limitations, and notices. TI is not responsible or liable for such altered documentation. Information of third parties may be subject to additional restrictions.

Resale of TI components or services with statements different from or beyond the parameters stated by TI for that component or service voids all express and any implied warranties for the associated TI component or service and is an unfair and deceptive business practice. TI is not responsible or liable for any such statements.

Buyer acknowledges and agrees that it is solely responsible for compliance with all legal, regulatory and safety-related requirements concerning its products, and any use of TI components in its applications, notwithstanding any applications-related information or support that may be provided by TI. Buyer represents and agrees that it has all the necessary expertise to create and implement safeguards which anticipate dangerous consequences of failures, monitor failures and their consequences, lessen the likelihood of failures that might cause harm and take appropriate remedial actions. Buyer will fully indemnify TI and its representatives against any damages arising out of the use of any TI components in safety-critical applications.

In some cases, TI components may be promoted specifically to facilitate safety-related applications. With such components, TI’s goal is to help enable customers to design and create their own end-product solutions that meet applicable functional safety standards and requirements. Nonetheless, such components are subject to these terms.

No TI components are authorized for use in FDA Class III (or similar life-critical medical equipment) unless authorized officers of the parties have executed a special agreement specifically governing such use.

Only those TI components which TI has specifically designated as military grade or “enhanced plastic” are designed and intended for use in military/aerospace applications or environments. Buyer acknowledges and agrees that any military or aerospace use of TI components which have ***not*** been so designated is solely at the Buyer's risk, and that Buyer is solely responsible for compliance with all legal and regulatory requirements in connection with such use.

TI has specifically designated certain components as meeting ISO/TS16949 requirements, mainly for automotive use. In any case of use of non-designated products, TI will not be responsible for any failure to meet ISO/TS16949.

Products		**Applications**	
Audio	www.ti.com/audio	Automotive and Transportation	www.ti.com/automotive
Amplifiers	amplifier.ti.com	Communications and Telecom	www.ti.com/communications
Data Converters	dataconverter.ti.com	Computers and Peripherals	www.ti.com/computers
DLP® Products	www.dlp.com	Consumer Electronics	www.ti.com/consumer-apps
DSP	dsp.ti.com	Energy and Lighting	www.ti.com/energy
Clocks and Timers	www.ti.com/clocks	Industrial	www.ti.com/industrial
Interface	interface.ti.com	Medical	www.ti.com/medical
Logic	logic.ti.com	Security	www.ti.com/security
Power Mgmt	power.ti.com	Space, Avionics and Defense	www.ti.com/space-avionics-defense
Microcontrollers	microcontroller.ti.com	Video and Imaging	www.ti.com/video
RFID	www.ti-rfid.com		
OMAP Applications Processors	www.ti.com/omap	**TI E2E Community**	e2e.ti.com
Wireless Connectivity	www.ti.com/wirelessconnectivity		

Mailing Address: Texas Instruments, Post Office Box 655303, Dallas, Texas 75265
Copyright © 2013, Texas Instruments Incorporated