LM148QML Quad 741 Op Amps

Check for Samples: LM148QML

FEATURES

- **741 Op Amp Operating Characteristics**
- **Class AB Output Stage—No Crossover Distortion**
- **Pin Compatible with the LM124**
- **Overload Protection for Inputs and Outputs**
- **Low Supply Current Drain: 0.6 mA/Amplifier**
- **Low Input Offset Voltage: 1 mV**
- **Low Input Offset Current: 4 nA**
- **Low Input Bias Current 30 nA**
- **High Degree of Isolation between Amplifiers: 120 dB**
- **Gain Bandwidth Product (Unity Gain): 1.0 MHz**

DESCRIPTION

The LM148 is a true quad LM741. It consists of four independent, high gain, internally compensated, low power operational amplifiers which have been designed to provide functional characteristics identical to those of the familiar LM741 operational amplifier. In addition the total supply current for all four amplifiers is comparable to the supply current of a single LM741 type op amp. Other features include input offset currents and input bias current which are much less than those of a standard LM741. Also, excellent isolation between amplifiers has been achieved by independently biasing each amplifier and using layout techniques which minimize thermal coupling.

The LM148 can be used anywhere multiple LM741 or LM1558 type amplifiers are being used and in applications where amplifier matching or high packing density is required.

Connection Diagram

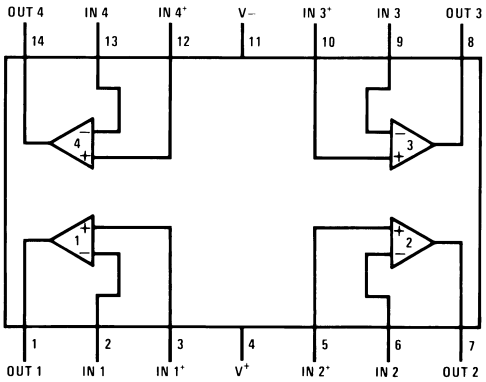

Figure 1. Top View
See Package Number J0014A

Please be aware that an important notice concerning availability, standard warranty, and use in critical applications of Texas Instruments semiconductor products and disclaimers thereto appears at the end of this data sheet.

All trademarks are the property of their respective owners.

PRODUCTION DATA information is current as of publication date. Products conform to specifications per the terms of the Texas Instruments standard warranty. Production processing does not necessarily include testing of all parameters.

Copyright © 2005–2013, Texas Instruments Incorporated

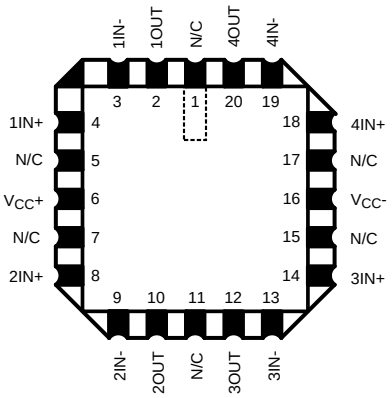

Figure 2. Top View
See Package Number NAJ0020A

Schematic Diagram

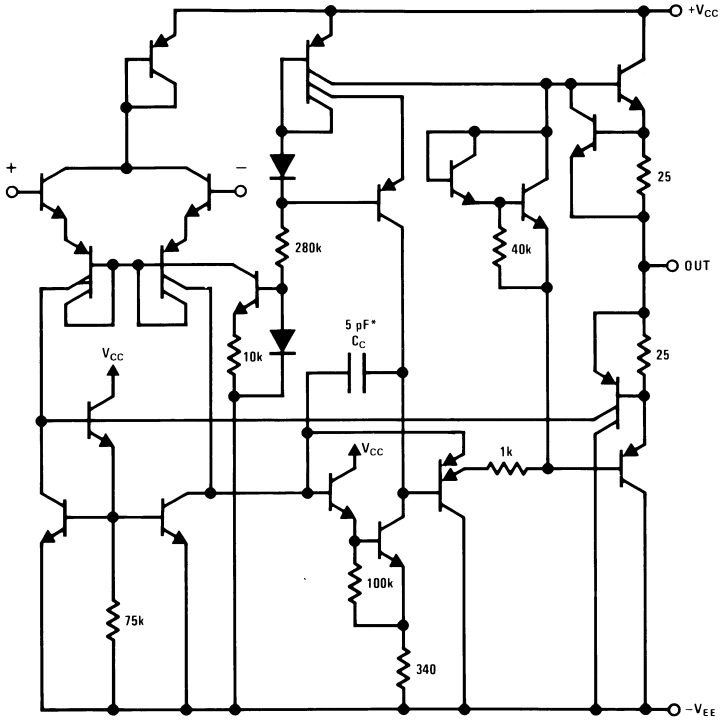

* 1 pF in the LM149

These devices have limited built-in ESD protection. The leads should be shorted together or the device placed in conductive foam during storage or handling to prevent electrostatic damage to the MOS gates.

Copyright © 2005–2013, Texas Instruments Incorporated

Absolute Maximum Ratings[1]

Supply Voltage			±22V
Differential Input Voltage			±44V
Output Short Circuit Duration[2]			Continuous
Power Dissipation (P_d at 25°C)[3]			1100mW
Thermal Resistance	θ_{JA}	CDIP (Still Air)	103°C/W
		CDIP (500LF/ Min Air flow)	52°C/W
		LCCC (Still Air)	90°C/W
		LCCC (500LF/ Min Air flow)	66°C/W
	θ_{JC}	CDIP	19°C/W
		LCCC	21°C/W
Maximum Junction Temperature (T_{jMAX})			150°C
Operating Temperature Range			−55°C ≤ T_A ≤ +125°C
Storage Temperature Range			−65°C ≤ T_A ≤ +150°C
Lead Temperature (Soldering, 10 sec.) Ceramic			300°C
ESD tolerance[4]			500V

(1) Absolute Maximum Ratings indicate limits beyond which damage to the device may occur. Operating Ratings indicate conditions for which the device is functional, but do not ensure specific performance limits. For ensured specifications and test conditions, see the Electrical Characteristics. The ensured specifications apply only for the test conditions listed. Some performance characteristics may degrade when the device is not operated under the listed test conditions.
(2) Any of the amplifier outputs can be shorted to ground indefinitely; however, more than one should not be simultaneously shorted as the maximum junction temperature will be exceeded.
(3) The maximum power dissipation for these devices must be derated at elevated temperatures and is dicated by T_{JMAX}, θ_{JA}, and the ambient temperature, T_A. The maximum available power dissipation at any temperature is $P_d = (T_{JMAX} - T_A)/\theta_{JA}$ or the number given in the Absolute Maximum Ratings, whichever is less.
(4) Human body model, 1.5 kΩ in series with 100 pF

Quality Conformance Inspection

MIL-STD-883, Method 5005 — Group A

Subgroup	Description	Temp (°C)
1	Static tests at	+25
2	Static tests at	+125
3	Static tests at	-55
4	Dynamic tests at	+25
5	Dynamic tests at	+125
6	Dynamic tests at	-55
7	Functional tests at	+25
8A	Functional tests at	+125
8B	Functional tests at	-55
9	Switching tests at	+25
10	Switching tests at	+125
11	Switching tests at	-55

Copyright © 2005–2013, Texas Instruments Incorporated

Electrical Characteristics

DC PARAMETERS (The following conditions apply to all parameters, unless otherwise specified.)
V_{CC} = ±15V, R_S = 0Ω

Symbol	Parameter	Conditions	Notes	Min	Max	Units	Sub-groups
V_{IO}	Input Offset Voltage	V_{CM} = 0V, R_S = 50 Ω		−5	+5	mV	1
				−6	+6	mV	2,3
I_{IO}	Input Offset Current	V_{CM} = 0V		−25	+25	nA	1
				−75	+75	nA	2,3
$\pm I_{IB}$	Input Bias Current	V_{CM} = 0V		1	100	nA	1
				1	325	nA	2,3
R_{in}	Input Resistance		See (1)	0.8		MΩ	1
PSRR+	Power Supply Rejection Ratio	$+V_{CC}$ = +15V and +5V, $-V_{CC}$ = −15V, R_S = 50Ω		77		dB	1, 2, 3
PSRR−	Power Supply Rejection Ratio	$+V_{CC}$ = +15V, $-V_{CC}$ = −15V and −5V, R_S = 50Ω		77		dB	1, 2, 3
CMRR	Common Mode Rejection Ratio	$+V_{CM}$ = ±12V, R_S = 50Ω		70		dB	1, 2, 3
I_{OS}+	Short Circuit Current			−55	−14	mA	1
I_{OS}−	Short Circuit Current			14	55	mA	1
I_{CC}	Power Supply Current			0.4	3.6	mA	1
				0.4	4.5	mA	2, 3
A_{VS}+	Large Signal Voltage Gain	V_{OUT} = 0V to +10V, R_L > 2 kΩ		50		V/mV	4
				25		V/mV	5, 6
A_{VS}−	Large Signal Voltage Gain	V_{OUT} = 0V to −10V, R_L > 2 kΩ		50		V/mV	4
				25		V/mV	5, 6
V_{out}+	Output Voltage Swing	R_L = 10 kΩ		+12		V	4, 5, 6
		R_L = 2kΩ		+10		V	4, 5, 6
V_{out}−	Output Voltage Swing	R_L = 10 kΩ			−12	V	4, 5, 6
		R_L = 2kΩ			−10	V	4, 5, 6

(1) Parameter specified, Not Tested.

Electrical Characteristics

AC PARAMETERS (The following conditions apply to all parameters, unless otherwise specified.)
V_{CC} = ±15V, A_V = 1, R_S = 0Ω

Symbol	Parameter	Conditions	Notes	Min	Max	Units	Sub-groups
±SR	Slew Rate			0.2		V/µs	7, 8A, 8B
G_{BW}	Gain Bandwidth Product			0.4	1.4	MHz	7, 8A, 8B

Copyright © 2005–2013, Texas Instruments Incorporated

Cross Talk Test Circuit

V_S = ±15V

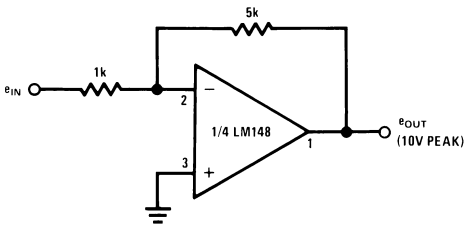

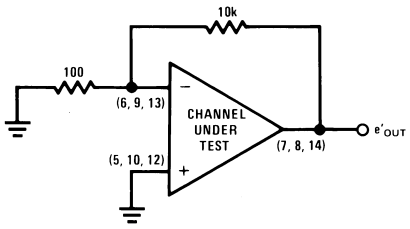

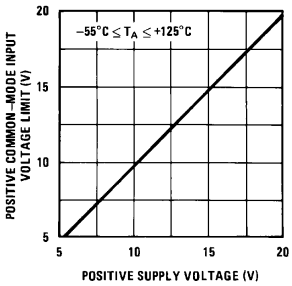

Typical Performance Characteristics

Supply Current

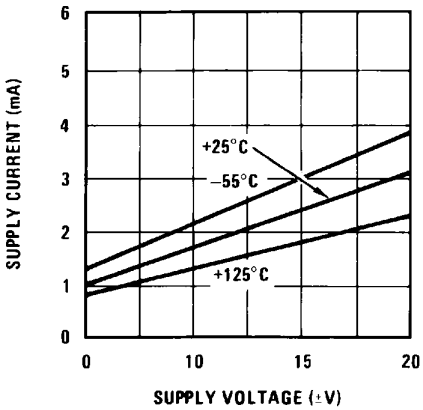

Figure 3.

Input Bias Current

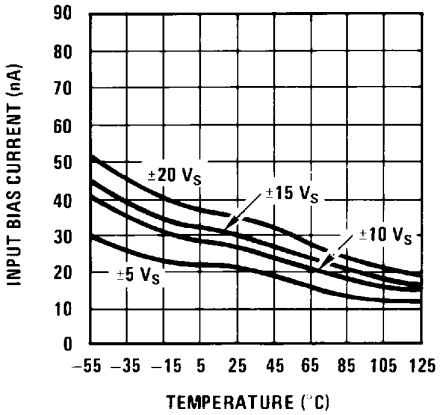

Figure 4.

Voltage Swing

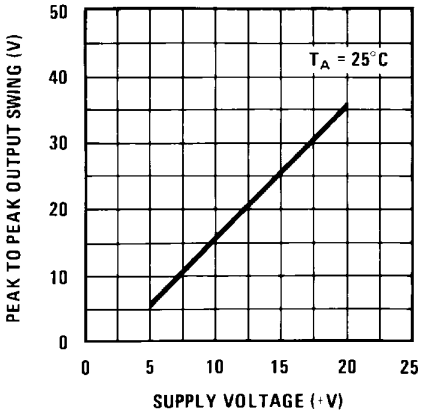

Figure 5.

Positive Current Limit

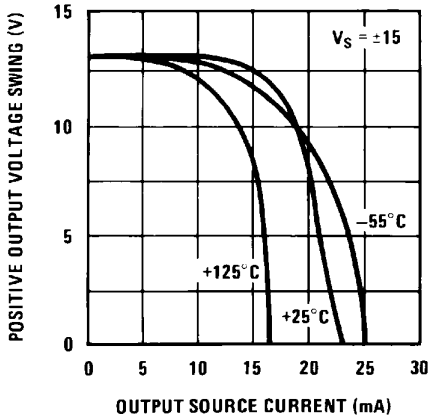

Figure 6.

Negative Current Limit

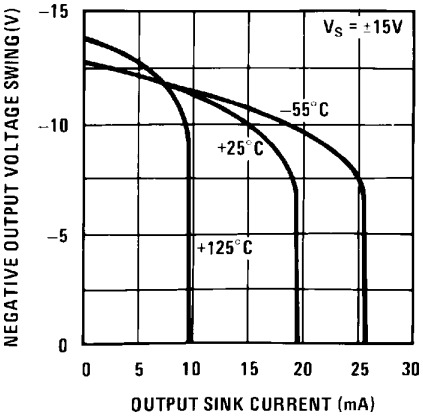

Figure 7.

Output Impedance

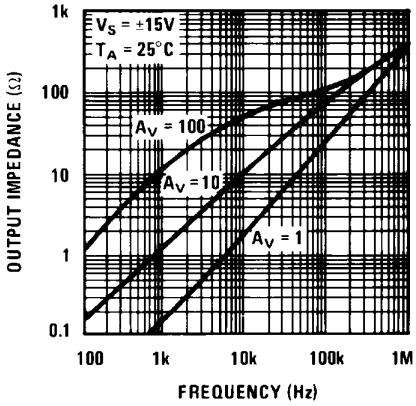

Figure 8.

Copyright © 2005–2013, Texas Instruments Incorporated

Typical Performance Characteristics (continued)

Common-Mode Rejection Ratio

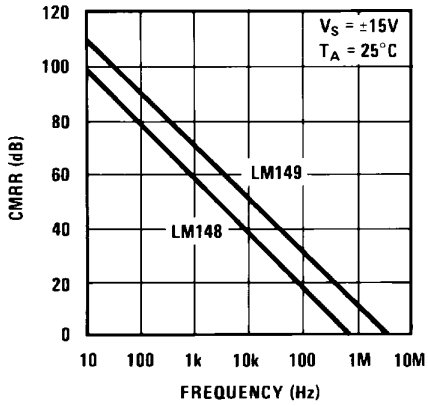

Figure 9.

Open Loop Frequency Response

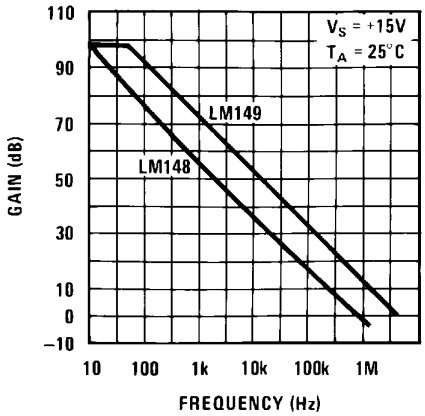

Figure 10.

Bode Plot LM148

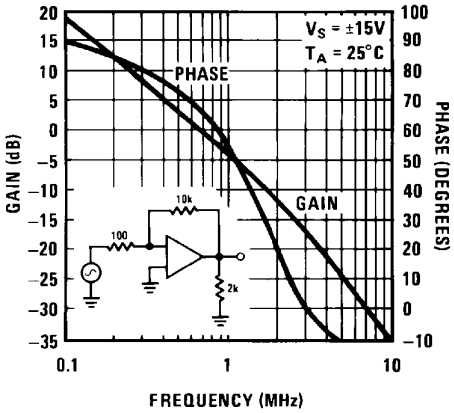

Figure 11.

Large Signal Pulse Response (LM148)

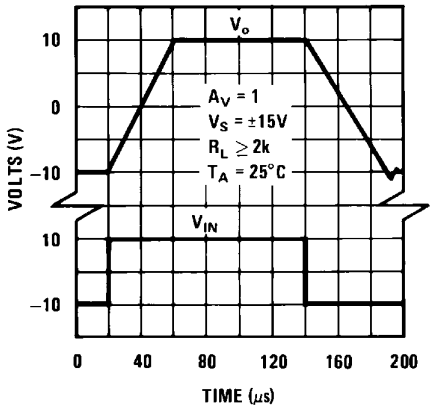

Figure 12.

Small Signal Pulse Response (LM148)

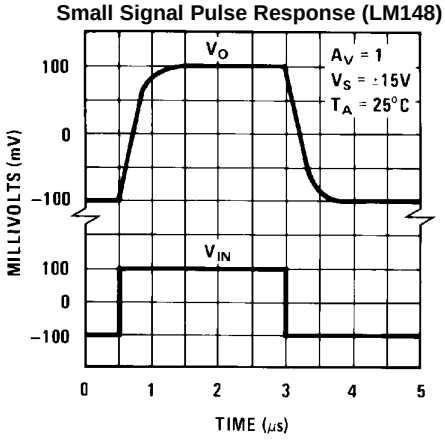

Figure 13.

Undistorted Output Voltage Swing

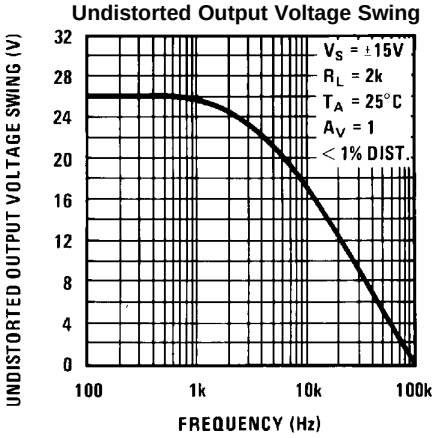

Figure 14.

Typical Performance Characteristics (continued)

Gain Bandwidth

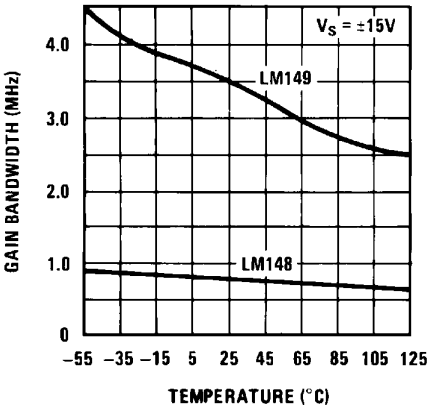

Figure 15.

Slew Rate

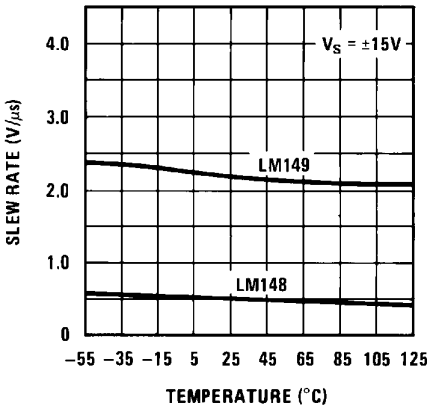

Figure 16.

Inverting Large Signal Pulse Response (LM148)

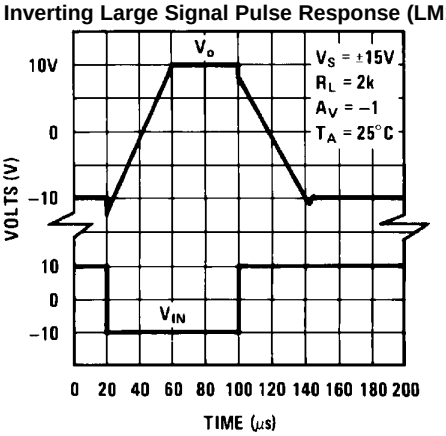

Figure 17.

Input Noise Voltage and Noise Current

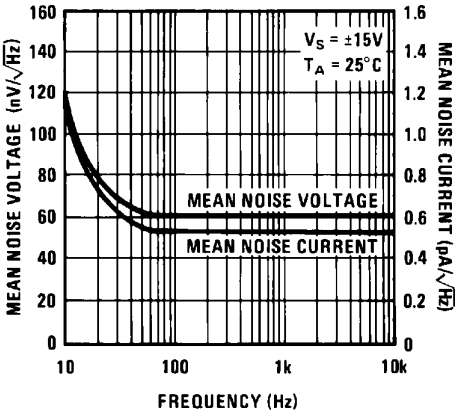

Figure 18.

Positive Common-Mode Input Voltage Limit

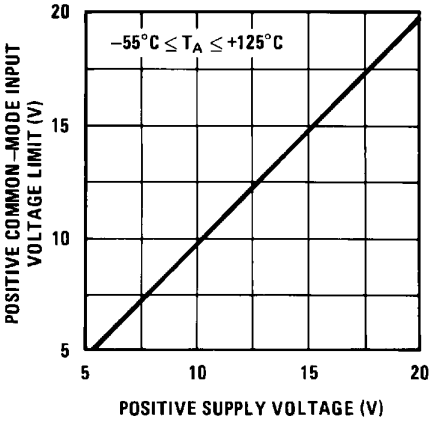

Figure 19.

Negative Common-Mode Input Voltage Limit

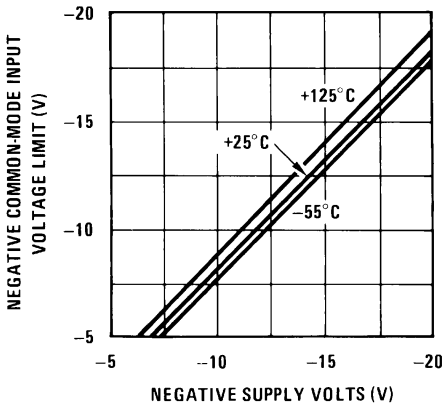

Figure 20.

Copyright © 2005–2013, Texas Instruments Incorporated

APPLICATION HINTS

The LM148 series are quad low power LM741 op amps. In the proliferation of quad op amps, these are the first to offer the convenience of familiar, easy to use operating characteristics of the LM741 op amp. In those applications where LM741 op amps have been employed, the LM148 series op amps can be employed directly with no change in circuit performance.

The package pin-outs are such that the inverting input of each amplifier is adjacent to its output. In addition, the amplifier outputs are located in the corners of the package which simplifies PC board layout and minimizes package related capacitive coupling between amplifiers.

The input characteristics of these amplifiers allow differential input voltages which can exceed the supply voltages. In addition, if either of the input voltages is within the operating common-mode range, the phase of the output remains correct. If the negative limit of the operating common-mode range is exceeded at both inputs, the output voltage will be positive. For input voltages which greatly exceed the maximum supply voltages, either differentially or common-mode, resistors should be placed in series with the inputs to limit the current.

Like the LM741, these amplifiers can easily drive a 100 pF capacitive load throughout the entire dynamic output voltage and current range. However, if very large capacitive loads must be driven by a non-inverting unity gain amplifier, a resistor should be placed between the output (and feedback connection) and the capacitance to reduce the phase shift resulting from the capacitive loading.

The output current of each amplifier in the package is limited. Short circuits from an output to either ground or the power supplies will not destroy the unit. However, if multiple output shorts occur simultaneously, the time duration should be short to prevent the unit from being destroyed as a result of excessive power dissipation in the IC chip.

As with most amplifiers, care should be taken lead dress, component placement and supply decoupling in order to ensure stability. For example, resistors from the output to an input should be placed with the body close to the input to minimize “pickup” and maximize the frequency of the feedback pole which capacitance from the input to ground creates.

A feedback pole is created when the feedback around any amplifier is resistive. The parallel resistance and capacitance from the input of the device (usually the inverting input) to AC ground set the frequency of the pole. In many instances the frequency of this pole is much greater than the expected 3 dB frequency of the closed loop gain and consequently there is negligible effect on stability margin. However, if the feedback pole is less than approximately six times the expected 3 dB frequency a lead capacitor should be placed from the output to the input of the op amp. The value of the added capacitor should be such that the RC time constant of this capacitor and the resistance it parallels is greater than or equal to the original feedback pole time constant.

Copyright © 2005–2013, Texas Instruments Incorporated

Typical Applications—LM148

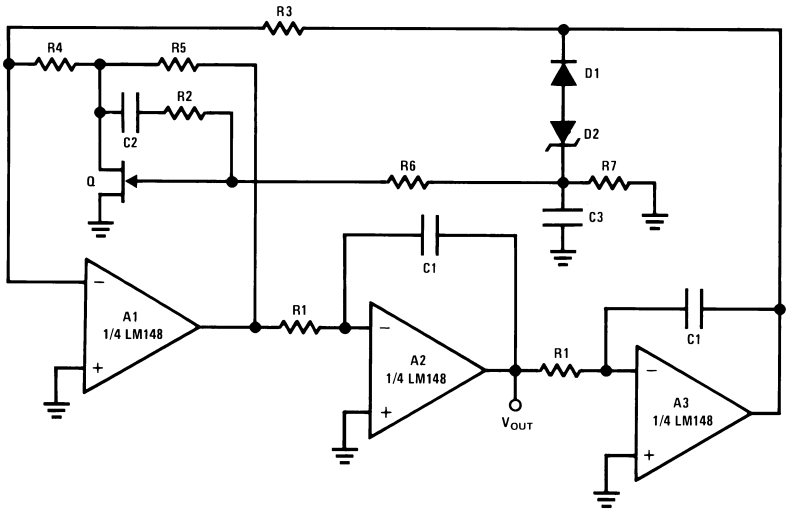

$$f = \frac{1}{2\pi R1C1} \times \sqrt{K},\ K = \frac{R4R5}{R3}\left(\frac{1}{r_{DS}} + \frac{1}{R4} + \frac{1}{R5}\right),\quad r_{DS} \approx \frac{R_{ON}}{\left(1 - \frac{V_{GS}}{V_P}\right)^{1/2}}$$

f_{MAX} = 5 kHz, THD ≤ 0.03%
R1 = 100k pot. C1 = 0.0047 µF, C2 = 0.01 µF, C3 = 0.1 µF, R2 = R6 = R7 = 1M,
R3 = 5.1k, R4 = 12Ω, R5 = 240Ω, Q = NS5102, D1 = 1N914, D2 = 3.6V avalanche diode (ex. LM103), V_S = ±15V
A simpler version with some distortion degradation at high frequencies can be made by using A1 as a simple inverting amplifier, and by putting back to back zeners in the feedback loop of A3.

Figure 21. One Decade Low Distortion Sinewave Generator

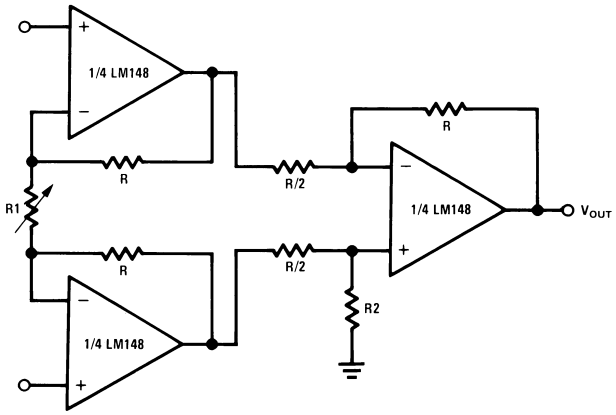

$$V_{OUT} = 2\left(\frac{2R}{R1} + 1\right),\ V_S^- - 3V \le V_{IN\,CM} \le V_S^+ - 3V,$$

V_S = ±15V
R = R2, trim R2 to boost CMRR

Figure 22. Low Cost Instrumentation Amplifier

Copyright © 2005–2013, Texas Instruments Incorporated

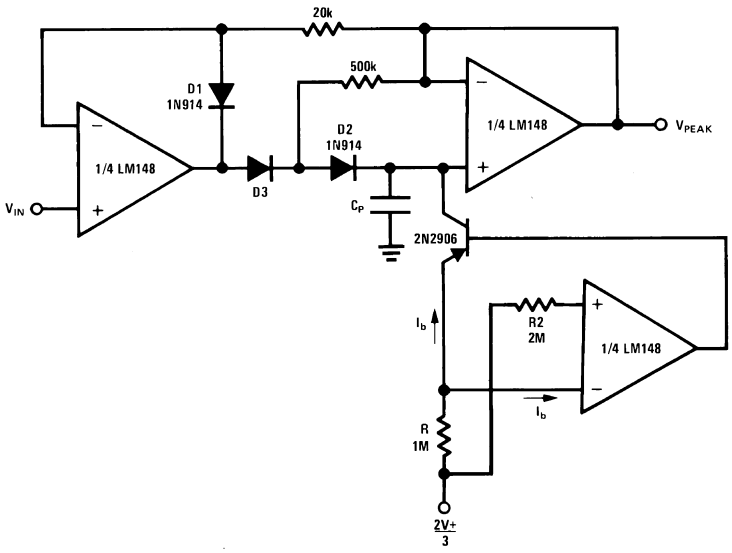

Adjust R for minimum drift
D3 low leakage diode
D1 added to improve speed
V_S = ±15V

Figure 23. Low Drift Peak Detector with Bias Current Compensation

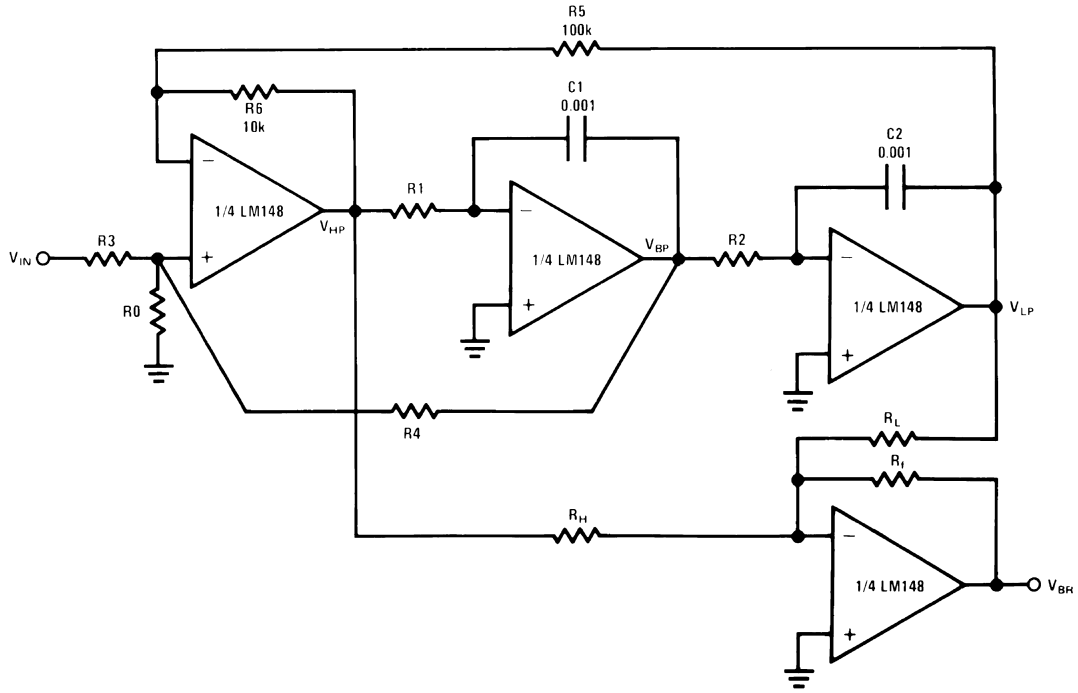

Tune Q through R0,
For predictable results: $f_O\ Q \le 4 \times 10^4$
Use Band Pass output to tune for Q

$$\frac{V_{(s)}}{V_{IN(s)}} = \frac{N_{(s)}}{D_{(s)}},\ D(s) = S^2 + \frac{S\omega_o}{Q} + \omega_o^2$$

$$N_{HP(s)} = S^2 H_{OHP},\ N_{BP(s)} = \frac{-s\omega_O H_{OBP}}{Q}\quad N_{LP} = \omega_o^2 H_{OLP}.$$

$$f_o = \frac{1}{2\pi}\sqrt{\frac{R6}{R5}}\sqrt{\frac{1}{t1t2}},\ t_i = R_iC_i,\ Q = \left(\frac{1 + R4|R3 + R4|R0}{1 + R6|R5}\right)\left(\frac{R6}{R5}\frac{t_1}{t_2}\right)^{1/2}$$

$$f_{NOTCH} = \frac{1}{2\pi}\left(\frac{R_H}{R_L\, t_1\, t_2}\right)^{1/2},\ H_{OHP} = \frac{1 + R6|R5}{1 + R3|R0 + R3|R4},\ H_{OBP} = \frac{1 + R4|R3 + R4|R0}{1 + R3|R0 + R3|R4}$$

$$H_{OLP} = \frac{1 + R5|R6}{1 + R3|R0 + R3|R4}$$

Figure 24. Universal State-Variable Filter

Copyright © 2005–2013, Texas Instruments Incorporated

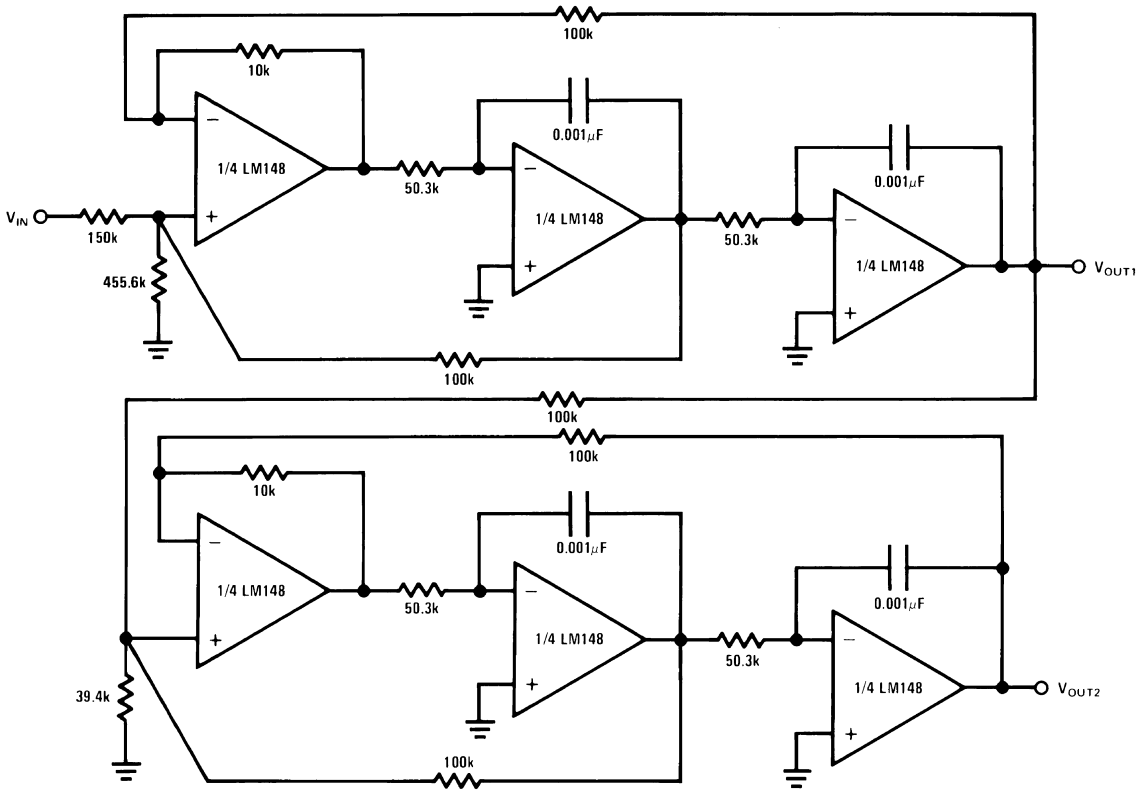

Use general equations, and tune each section separately
$Q_{1stSECTION} = 0.541$, $Q_{2ndSECTION} = 1.306$
The response should have 0 dB peaking

Figure 25. A 1 kHz 4 Pole Butterworth

Figure 26.

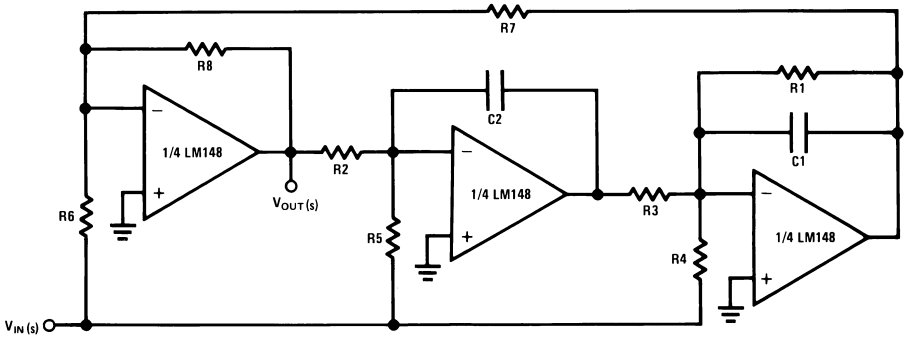

$$Q = \sqrt{\frac{R8}{R7}} \times \frac{R1C1}{\sqrt{R3C2R2C1}},\quad f_o = \frac{1}{2\pi}\sqrt{\frac{R8}{R7}} \times \frac{1}{\sqrt{R2R3C1C2}},\quad f_{NOTCH} = \frac{1}{2\pi}\sqrt{\frac{R6}{R3R5R7C1C2}}$$

Necessary condition for notch: $\frac{1}{R6} = \frac{R1}{R4R7}$

Ex: f_{NOTCH} = 3 kHz, Q = 5, R1 = 270k, R2 = R3 = 20k, R4 = 27k, R5 = 20k, R6 = R8 = 10k, R7 = 100k, C1 = C2 = 0.001 μF
Better noise performance than the state-space approach.

Figure 27. A 3 Amplifier Bi-Quad Notch Filter

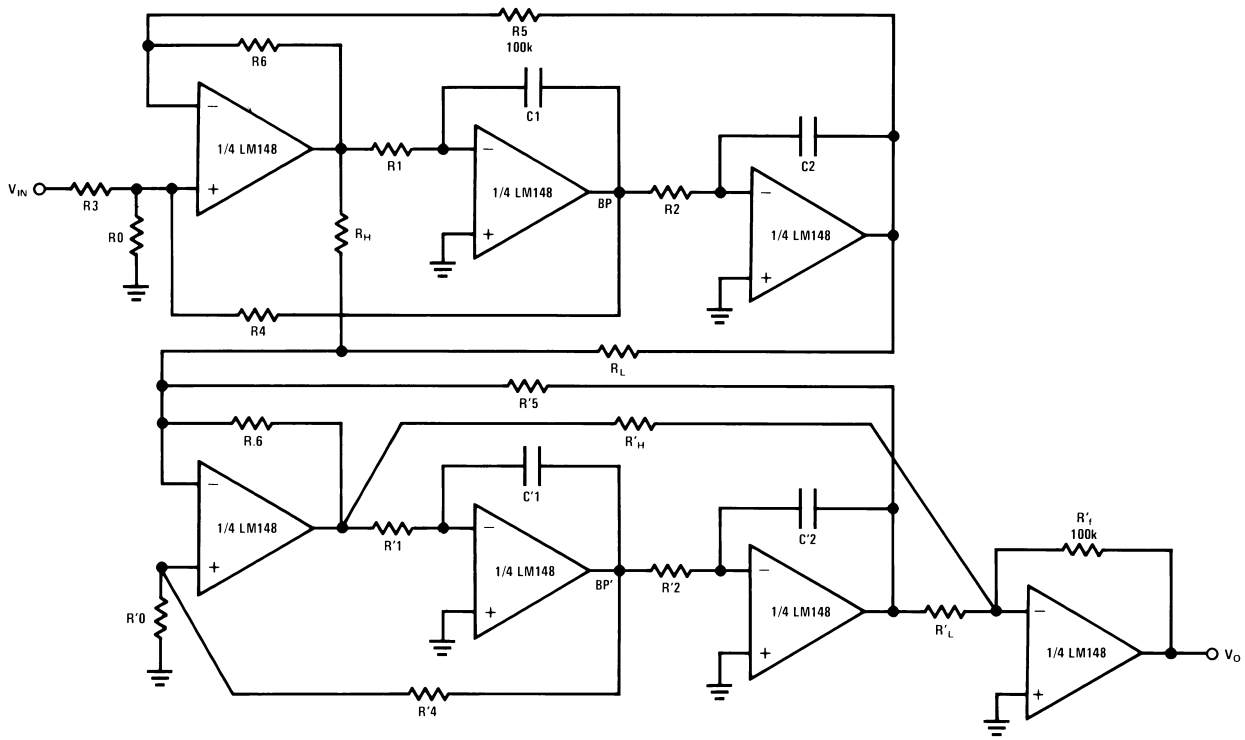

R1C1 = R2C2 = t
R′1C′1 = R′2C′2 = t′
f_C = 1 kHz, f_S = 2 kHz, f_p = 0.543, f_Z = 2.14, Q = 0.841, f'_P = 0.987, f'_Z = 4.92, Q′ = 4.403, normalized to ripple BW

$$f = \frac{1}{2\pi R1C1} \times \sqrt{K},\ K = \frac{R4R5}{R3}\left(\frac{1}{r_{DS}} + \frac{1}{R4} + \frac{1}{R5}\right),\quad r_{DS} \approx \frac{R_{ON}}{\left(1 - \frac{V_{GS}}{V_P}\right)^{1/2}}$$

Use the BP outputs to tune Q, Q′, tune the 2 sections separately
R1 = R2 = 92.6k, R3 = R4 = R5 = 100k, R6 = 10k, R0 = 107.8k, R_L = 100k, R_H = 155.1k,
R′1 = R′2 = 50.9k, R′4 = R′5 = 100k, R′6 = 10k, R′0 = 5.78k, R'_L = 100k, R'_H = 248.12k, R′f = 100k. All capacitors are 0.001 µF.

Figure 28. A 4th Order 1 kHz Elliptic Filter (4 Poles, 4 Zeros)

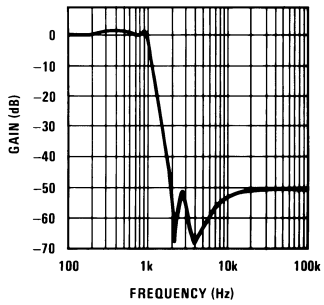

Figure 29. Lowpass Response

Copyright © 2005–2013, Texas Instruments Incorporated

Typical Simulation

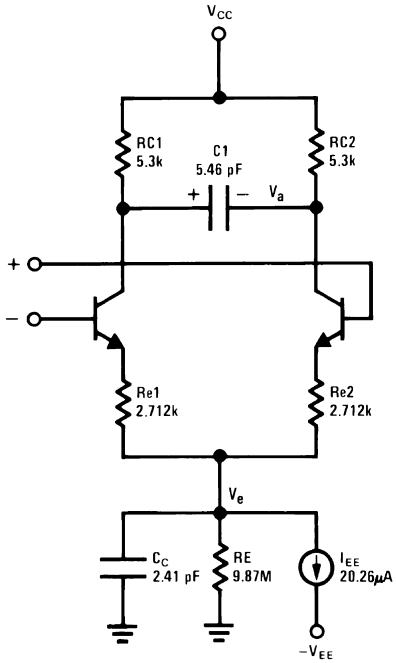

For more details, see IEEE Journal of Solid-State Circuits, Vol. SC-9, No. 6, December 1974

$_{o1} = 112I_S = 8 \times 10^{-16}$

$_{o2}$ = 144*C2 = 6 pF for LM149

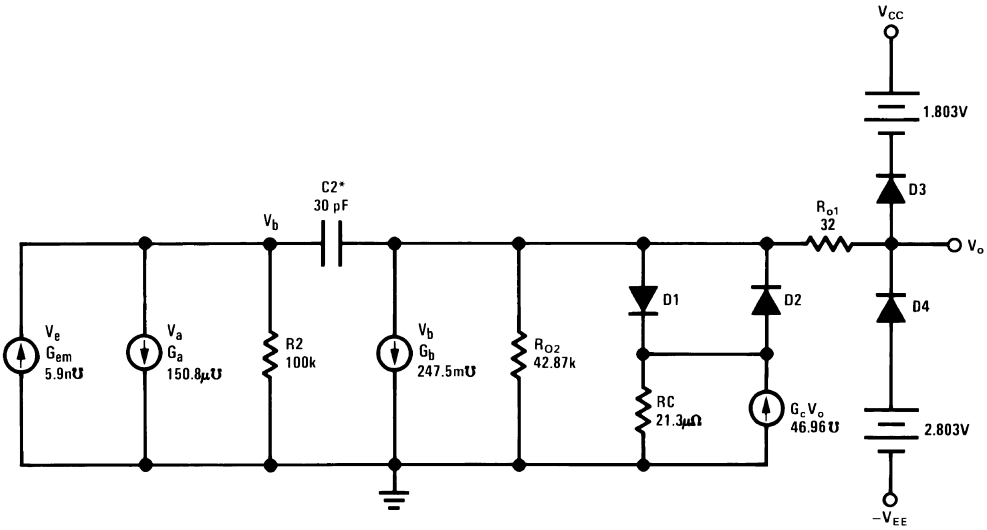

Figure 30. LM148, LM741 Macromodel for Computer Simulation

REVISION HISTORY SECTION

Date Released	Revision	Section	Originator	Changes
02/08/05	A	New Release, Corporate format	L. Lytle	1 MDS data sheet converted into one Corp. data sheet format. MNLM148-X, Rev. 2A2. MDS data sheet will be archived.
03/20/13	A	All		Changed layout of National Data Sheet to TI format

Copyright © 2005–2013, Texas Instruments Incorporated

PACKAGING INFORMATION

Orderable Device	Status (1)	Package Type	Package Drawing	Pins	Package Qty	Eco Plan (2)	Lead/Ball Finish	MSL Peak Temp (3)	Op Temp (°C)	Top-Side Markings (4)	Samples
LM148J/883	ACTIVE	CDIP	J	14	25	TBD	Call TI	Call TI	-55 to 125	LM148J/883 Q	Samples

(1) The marketing status values are defined as follows:
ACTIVE: Product device recommended for new designs.
LIFEBUY: TI has announced that the device will be discontinued, and a lifetime-buy period is in effect.
NRND: Not recommended for new designs. Device is in production to support existing customers, but TI does not recommend using this part in a new design.
PREVIEW: Device has been announced but is not in production. Samples may or may not be available.
OBSOLETE: TI has discontinued the production of the device.

(2) Eco Plan - The planned eco-friendly classification: Pb-Free (RoHS), Pb-Free (RoHS Exempt), or Green (RoHS & no Sb/Br) - please check http://www.ti.com/productcontent for the latest availability information and additional product content details.
TBD: The Pb-Free/Green conversion plan has not been defined.
Pb-Free (RoHS): TI's terms "Lead-Free" or "Pb-Free" mean semiconductor products that are compatible with the current RoHS requirements for all 6 substances, including the requirement that lead not exceed 0.1% by weight in homogeneous materials. Where designed to be soldered at high temperatures, TI Pb-Free products are suitable for use in specified lead-free processes.
Pb-Free (RoHS Exempt): This component has a RoHS exemption for either 1) lead-based flip-chip solder bumps used between the die and package, or 2) lead-based die adhesive used between the die and leadframe. The component is otherwise considered Pb-Free (RoHS compatible) as defined above.
Green (RoHS & no Sb/Br): TI defines "Green" to mean Pb-Free (RoHS compatible), and free of Bromine (Br) and Antimony (Sb) based flame retardants (Br or Sb do not exceed 0.1% by weight in homogeneous material)

(3) MSL, Peak Temp. -- The Moisture Sensitivity Level rating according to the JEDEC industry standard classifications, and peak solder temperature.

(4) Multiple Top-Side Markings will be inside parentheses. Only one Top-Side Marking contained in parentheses and separated by a "~" will appear on a device. If a line is indented then it is a continuation of the previous line and the two combined represent the entire Top-Side Marking for that device.

Important Information and Disclaimer: The information provided on this page represents TI's knowledge and belief as of the date that it is provided. TI bases its knowledge and belief on information provided by third parties, and makes no representation or warranty as to the accuracy of such information. Efforts are underway to better integrate information from third parties. TI has taken and continues to take reasonable steps to provide representative and accurate information but may not have conducted destructive testing or chemical analysis on incoming materials and chemicals. TI and TI suppliers consider certain information to be proprietary, and thus CAS numbers and other limited information may not be available for release.

In no event shall TI's liability arising out of such information exceed the total purchase price of the TI part(s) at issue in this document sold by TI to Customer on an annual basis.

J (R–GDIP–T**) CERAMIC DUAL IN–LINE PACKAGE

14 LEADS SHOWN

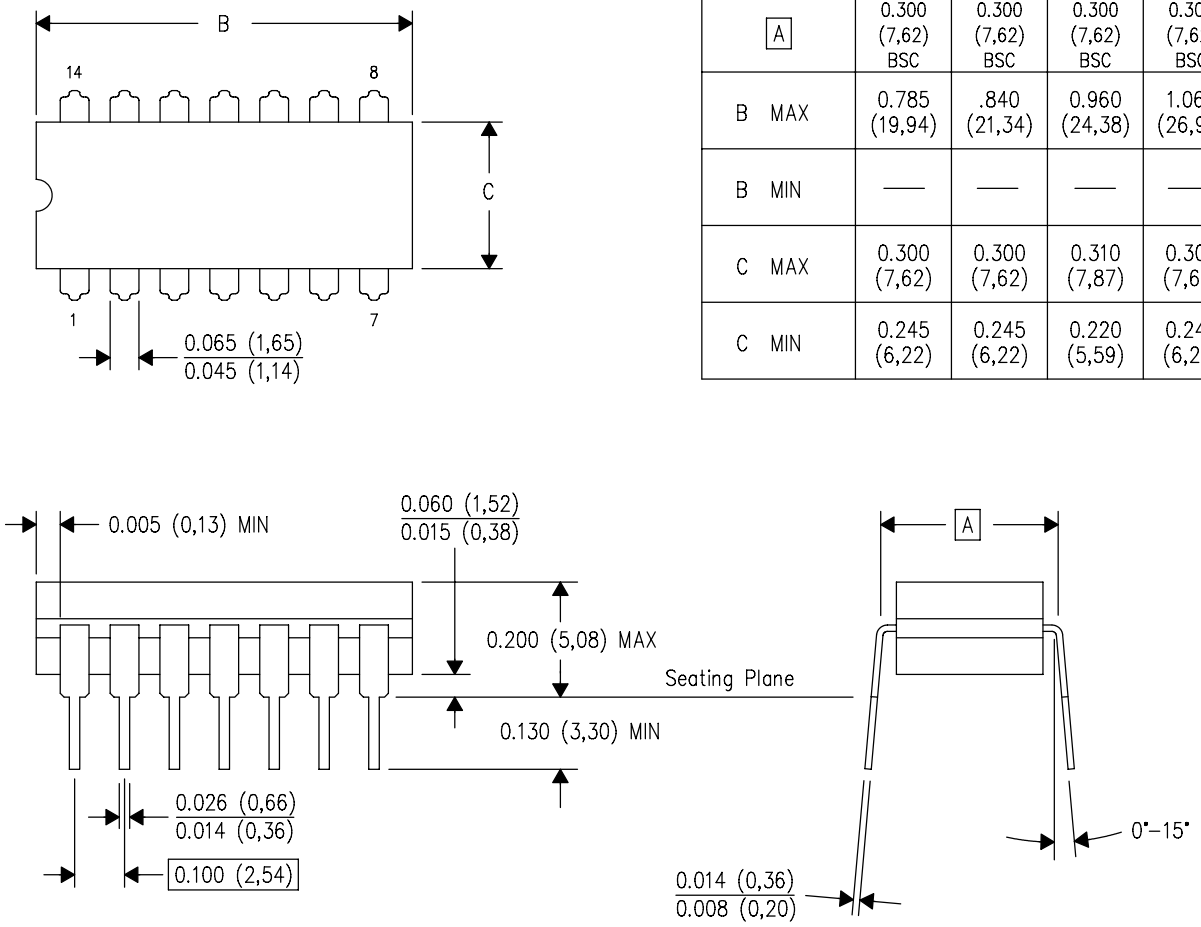

DIM \ PINS **	14	16	18	20
A	0.300 (7,62) BSC	0.300 (7,62) BSC	0.300 (7,62) BSC	0.300 (7,62) BSC
B MAX	0.785 (19,94)	.840 (21,34)	0.960 (24,38)	1.060 (26,92)
B MIN	—	—	—	—
C MAX	0.300 (7,62)	0.300 (7,62)	0.310 (7,87)	0.300 (7,62)
C MIN	0.245 (6,22)	0.245 (6,22)	0.220 (5,59)	0.245 (6,22)

4040083/F 03/03

NOTES:
- A. All linear dimensions are in inches (millimeters).
- B. This drawing is subject to change without notice.
- C. This package is hermetically sealed with a ceramic lid using glass frit.
- D. Index point is provided on cap for terminal identification only on press ceramic glass frit seal only.
- E. Falls within MIL STD 1835 GDIP1–T14, GDIP1–T16, GDIP1–T18 and GDIP1–T20.

IMPORTANT NOTICE

Texas Instruments Incorporated and its subsidiaries (TI) reserve the right to make corrections, enhancements, improvements and other changes to its semiconductor products and services per JESD46, latest issue, and to discontinue any product or service per JESD48, latest issue. Buyers should obtain the latest relevant information before placing orders and should verify that such information is current and complete. All semiconductor products (also referred to herein as “components”) are sold subject to TI’s terms and conditions of sale supplied at the time of order acknowledgment.

TI warrants performance of its components to the specifications applicable at the time of sale, in accordance with the warranty in TI’s terms and conditions of sale of semiconductor products. Testing and other quality control techniques are used to the extent TI deems necessary to support this warranty. Except where mandated by applicable law, testing of all parameters of each component is not necessarily performed.

TI assumes no liability for applications assistance or the design of Buyers’ products. Buyers are responsible for their products and applications using TI components. To minimize the risks associated with Buyers’ products and applications, Buyers should provide adequate design and operating safeguards.

TI does not warrant or represent that any license, either express or implied, is granted under any patent right, copyright, mask work right, or other intellectual property right relating to any combination, machine, or process in which TI components or services are used. Information published by TI regarding third-party products or services does not constitute a license to use such products or services or a warranty or endorsement thereof. Use of such information may require a license from a third party under the patents or other intellectual property of the third party, or a license from TI under the patents or other intellectual property of TI.

Reproduction of significant portions of TI information in TI data books or data sheets is permissible only if reproduction is without alteration and is accompanied by all associated warranties, conditions, limitations, and notices. TI is not responsible or liable for such altered documentation. Information of third parties may be subject to additional restrictions.

Resale of TI components or services with statements different from or beyond the parameters stated by TI for that component or service voids all express and any implied warranties for the associated TI component or service and is an unfair and deceptive business practice. TI is not responsible or liable for any such statements.

Buyer acknowledges and agrees that it is solely responsible for compliance with all legal, regulatory and safety-related requirements concerning its products, and any use of TI components in its applications, notwithstanding any applications-related information or support that may be provided by TI. Buyer represents and agrees that it has all the necessary expertise to create and implement safeguards which anticipate dangerous consequences of failures, monitor failures and their consequences, lessen the likelihood of failures that might cause harm and take appropriate remedial actions. Buyer will fully indemnify TI and its representatives against any damages arising out of the use of any TI components in safety-critical applications.

In some cases, TI components may be promoted specifically to facilitate safety-related applications. With such components, TI’s goal is to help enable customers to design and create their own end-product solutions that meet applicable functional safety standards and requirements. Nonetheless, such components are subject to these terms.

No TI components are authorized for use in FDA Class III (or similar life-critical medical equipment) unless authorized officers of the parties have executed a special agreement specifically governing such use.

Only those TI components which TI has specifically designated as military grade or “enhanced plastic” are designed and intended for use in military/aerospace applications or environments. Buyer acknowledges and agrees that any military or aerospace use of TI components which have ***not*** been so designated is solely at the Buyer's risk, and that Buyer is solely responsible for compliance with all legal and regulatory requirements in connection with such use.

TI has specifically designated certain components as meeting ISO/TS16949 requirements, mainly for automotive use. In any case of use of non-designated products, TI will not be responsible for any failure to meet ISO/TS16949.

Products		**Applications**	
Audio	www.ti.com/audio	Automotive and Transportation	www.ti.com/automotive
Amplifiers	amplifier.ti.com	Communications and Telecom	www.ti.com/communications
Data Converters	dataconverter.ti.com	Computers and Peripherals	www.ti.com/computers
DLP® Products	www.dlp.com	Consumer Electronics	www.ti.com/consumer-apps
DSP	dsp.ti.com	Energy and Lighting	www.ti.com/energy
Clocks and Timers	www.ti.com/clocks	Industrial	www.ti.com/industrial
Interface	interface.ti.com	Medical	www.ti.com/medical
Logic	logic.ti.com	Security	www.ti.com/security
Power Mgmt	power.ti.com	Space, Avionics and Defense	www.ti.com/space-avionics-defense
Microcontrollers	microcontroller.ti.com	Video and Imaging	www.ti.com/video
RFID	www.ti-rfid.com		
OMAP Applications Processors	www.ti.com/omap	**TI E2E Community**	e2e.ti.com
Wireless Connectivity	www.ti.com/wirelessconnectivity		

Mailing Address: Texas Instruments, Post Office Box 655303, Dallas, Texas 75265
Copyright © 2013, Texas Instruments Incorporated