LMP8646 Precision Current Limiter

Check for Samples: LMP8646

FEATURES

- **Provides Circuit Protection and Current Limiting**
- **Single Supply Operation**
- **-2V to +76V Common Mode Voltage Range**
- **Variable Gain Set by External Resistor**
- **Adjustable Bandwidth Set by External Capacitor**
- **Buffered Output**
- **3% Output Accuracy Achievable at V_{SENSE} = 100 mV**

APPLICATIONS

- **High-Side and Low-Side Current Limit**
- **Circuit Fault Protection**
- **Battery and Supercap Charging**
- **LED Constant Current Drive**
- **Power Management**

KEY SPECIFICATIONS

- **Supply Voltage Range 2.7V to 12V**
- **Output Current (Source) 0 to 5 mA**
- **Gain Accuracy 2.0% (max)**
- **Transconductance 200 µA/V**
- **Offset ±1 mV (max)**
- **Quiescent Current 380 µA**
- **Input Bias 12 µA (typ)**
- **PSRR 85 dB**
- **CMRR 95 dB**
- **Temperature Range −40°C to 125°C**
- **6-Pin SOT Package**

DESCRIPTION

The LMP8646 is a precision current limiter used to improve the current limit accuracy of any switching or linear regulator with an available feedback node.

The LMP8646 accepts input signals with a common mode voltage ranging from -2V to 76V. It has a variable gain which is used to adjust the sense current. The gain is configured with a single external resistor, R_G, providing a high level of flexibility and accuracy up to 2%. The adjustable bandwidth, which allows the device to be used with a variety of applications, is configurable with a single external capacitor in parallel with R_G. In addition, the output is buffered in order to provide a low output impedance.

The LMP8646 is an ideal choice for industrial, automotive, telecommunications, and consumer applications where circuit protection and improved precision systems are required. The LMP8646 is available in a 6-pin SOT package and can operate at temperature range of −40°C to 125°C.

Please be aware that an important notice concerning availability, standard warranty, and use in critical applications of Texas Instruments semiconductor products and disclaimers thereto appears at the end of this data sheet.

All trademarks are the property of their respective owners.

PRODUCTION DATA information is current as of publication date. Products conform to specifications per the terms of the Texas Instruments standard warranty. Production processing does not necessarily include testing of all parameters.

Copyright © 2012–2013, Texas Instruments Incorporated

Typical Application

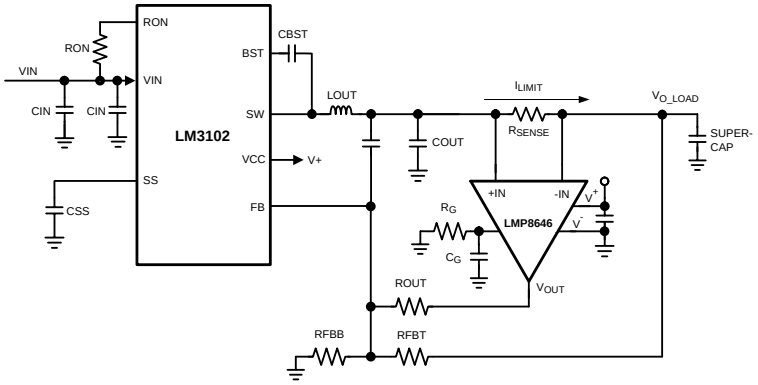

Connection Diagram

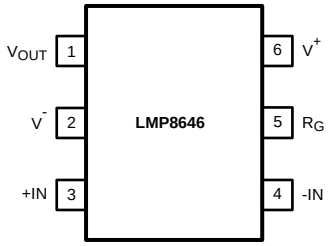

Figure 1. 6-Pin SOT (Top View)
See Package Number DDC0006A

PIN DESCRIPTIONS

Pin	Name	Description
1	V_{OUT}	Single-Ended Output Voltage
2	V^-	Negative Supply Voltage. This pin should be connected to ground.
3	+IN	Positive Input
4	-IN	Negative Input
5	R_G	External Gain Resistor. An external capacitance (C_G) may be added in parallel with R_G to limit the bandwidth.
6	V^+	Positive Supply Voltage

Block Diagram

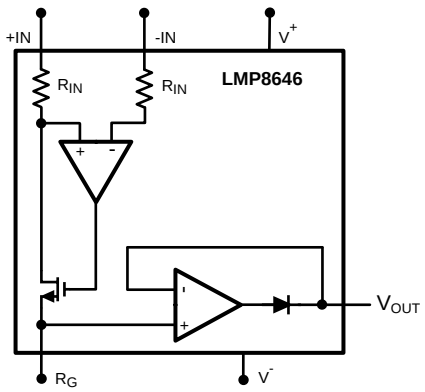

Copyright © 2012–2013, Texas Instruments Incorporated

These devices have limited built-in ESD protection. The leads should be shorted together or the device placed in conductive foam during storage or handling to prevent electrostatic damage to the MOS gates.

Absolute Maximum Ratings[1][2]

ESD Tolerance[3]	Human Body Model	For input pins: +IN and -IN	±4000V
		For all other pins	±2000V
	Machine Model		200V
	Charge device model		1250
Supply Voltage ($V_S = V^+ - V^-$)			13.2V
Differential voltage +IN- (-IN)			6V
Voltage at pins +IN, -IN			-6V to 80V
Voltage at R_G pin			13.2V
Voltage at OUT pin			V^- to V^+
Storage Temperature Range			-65°C to 150°C
Junction Temperature[4]			150°C
For soldering specifications see SNOA549			

(1) If Military/Aerospace specified devices are required, please contact the Texas Instruments Sales Office/Distributors for availability and specifications.
(2) Absolute Maximum Ratings indicate limits beyond which damage to the device may occur. Operating Ratings indicate conditions for which the device is intended to be functional, but specific performance is not ensured. For ensured specifications and the test conditions, see the Electrical Characteristics Tables.
(3) Human Body Model, applicable std. MIL-STD-883, Method 3015.7. Machine Model, applicable std. JESD22-A115-A (ESD MM std. of JEDEC) Field-Induced Charge-Device Model, applicable std. JESD22-C101-C (ESD FICDM std. of JEDEC).
(4) The maximum power dissipation must be derated at elevated temperatures and is dictated by $T_{J(MAX)}$, θ_{JA}, and the ambient temperature, T_A. The maximum allowable power dissipation $P_{DMAX} = (T_{J(MAX)} - T_A)/ \theta_{JA}$ or the number given in Absolute Maximum Ratings, whichever is lower.

Operating Ratings[1]

Supply Voltage ($V_S = V^+ - V^-$)		2.7V to 12V
Temperature Range[2]		-40°C to 125°C
Package Thermal Resistance[2]	TSOT-6	96°C/W

(1) Absolute Maximum Ratings indicate limits beyond which damage to the device may occur. Operating Ratings indicate conditions for which the device is intended to be functional, but specific performance is not ensured. For ensured specifications and the test conditions, see the Electrical Characteristics Tables.
(2) The maximum power dissipation must be derated at elevated temperatures and is dictated by $T_{J(MAX)}$, θ_{JA}, and the ambient temperature, T_A. The maximum allowable power dissipation $P_{DMAX} = (T_{J(MAX)} - T_A)/ \theta_{JA}$ or the number given in Absolute Maximum Ratings, whichever is lower.

Copyright © 2012–2013, Texas Instruments Incorporated

2.7V Electrical Characteristics[1]

Unless otherwise specified, all limits ensured for at T_A = 25°C, V_S=(V^+ – V^-) = (2.7V - 0V) = 2.7 V, −2V < V_{CM} < 76V, R_G= 25kΩ, R_L = 10 kΩ. **Boldface** limits apply at the temperature extremes.

Symbol	Parameter	Condition	Min[2]	Typ[3]	Max[2]	Units
V_{OFFSET}	Input Offset Voltage	V_{CM} = 2.1V	-1 **-1.7**		1 **1.7**	mV
TCV_{OS}	Input Offset Voltage Drift[4][5]	V_{CM} = 2.1V			7	µV/°C
I_B	Input Bias Current[6]	V_{CM} = 2.1V		12	20	µA
e_{ni}	Input Voltage Noise[5]	f > 10 kHz, R_G = 5 kΩ		120		nV/√Hz
V_{SENSE}	Max Input Sense Voltage[5]	V_{CM} = 12V, R_G = 5 kΩ			600	mV
Gain A_V	Adjustable Gain Setting[5]	V_{CM} = 12V	1		100	V/V
Gm	Transconductance = 1/R_{IN}	V_{CM} = 2.1V		200		µA/V
	Accuracy	V_{CM} = 2.1V	-2 **-3.4**		2 **3.4**	%
	Gm drift[5]	−40°C to 125°C, V_{CM}=2.1V			**140**	ppm /°C
PSRR	Power Supply Rejection Ratio	V_{CM} = 2.1V, 2.7V < V^+ < 12V,	85			dB
CMRR	Common Mode Rejection Ratio	2.1V < V_{CM} < 76V	95			dB
		-2V <V_{CM} < 2.1V,	55			
SR	Slew Rate[7][5]	V_{CM} = 5V, C_G = 4 pF, V_{SENSE} from 25 mV to 175 mV, C_L = 30 pF, R_L = 1MΩ		0.5		V/µs
I_S	Supply Current	V_{CM} = 2.1V		380	610 **807**	uA
		V_{CM} = −2V		2000	2500 **2700**	
V_{OUT}	Maximum Output Voltage	V_{CM} = 2.1V, R_G = 500 kΩ	1.1			V
	Minimum Output Voltage	V_{CM} = 2.1V			20	mV
	Maximum Output Voltage	VS = V_{CM} = 3.3V, R_G = 500 kΩ	1.6			V
	Minimum Output Voltage	VS = V_{CM} = 3.3V, R_G = 500 kΩ			22	mV
I_{OUT}	Output current[5]	Sourcing, V_{OUT}= 600mV, R_G = 150kΩ		5		mA
C_{LOAD}	Max Output Capacitance Load[5]			30		pF

(1) Electrical Table values apply only for factory testing conditions at the temperature indicated. Factory testing conditions result in very limited self-heating of the device such that T_J = T_A. No assurance of parametric performance is indicated in the electrical tables under conditions of internal self-heating where T_J > T_A.
(2) All limits are specified by testing, design, or statistical analysis.
(3) Typical values represent the most likely parametric norm at the time of characterization. Actual typical values may vary over time and will also depend on the application and configuration. The typical values are not tested and are not specified on shipped production material.
(4) Offset voltage temperature drift is determined by dividing the change in V_{OS} at the temperature extremes by the total temperature change.
(5) This parameter is specified by design and/or characterization and is not tested in production.
(6) Positive Bias Current corresponds to current flowing into the device.
(7) The number specified is the average of rising and falling slew rates and measured at 90% to 10%.

Copyright © 2012–2013, Texas Instruments Incorporated

5V Electrical Characteristics[1]

Unless otherwise specified, all limits ensured for at T_A = 25°C, V_S=V^+-V^-, V^+ = 5V, V^- = 0V, −2V < V_{CM} < 76V, R_g= 25kΩ, R_L = 10 kΩ. **Boldface** limits apply at the temperature extremes.

Symbol	Parameter	Condition	Min[2]	Typ[3]	Max[2]	Units
V_{OFFSET}	Input Offset Voltage	V_{CM} = 2.1V	-1 **-1.7**		1 **1.7**	mV
TCV_{OS}	Input Offset Voltage Drift[4][5]	V_{CM} = 2.1V			7	µV/°C
I_B	Input Bias Current[6]	V_{CM} = 2.1V		12.5	22	µA
e_{ni}	Input Voltage Noise[5]	f > 10 kHz, R_G = 5 kΩ		120		nV/√Hz
$V_{SENSE(MAX)}$	Max Input Sense Voltage[5]	V_{CM} = 12V, R_G = 5 kΩ		600		mV
Gain A_V	Adjustable Gain Setting[5]	V_{CM} = 12V	1		100	V/V
Gm	Transconductance = 1/R_{IN}	V_{CM} = 2.1V		200		µA/V
	Accuracy	V_{CM} = 2.1V	-2 **-3.4**		2 **3.4**	%
	Gm drift[5]	−40°C to 125°C, V_{CM}= 2.1V			140	ppm /°C
PSRR	Power Supply Rejection Ratio	V_{CM} = 2.1V, 2.7V < V^+ < 12V,	85			dB
CMRR	Common Mode Rejection Ratio	2.1V <V_{CM} < 76V	95			dB
		-2V < V_{CM} < 2.1V	55			
SR	Slew Rate[7][5]	V_{CM} = 5V, C_G = 4 pF, V_{SENSE} from 100 mV to 500 mV, C_L = 30 pF, R_L= 1MΩ		0.5		V/µs
I_S	Supply Current	V_{CM} = 2.1V		450	660 **939**	uA
		V_{CM} = −2V		2100	2800 **3030**	
V_{OUT}	Maximum Output Voltage	V_{CM} =5V, R_G= 500 kΩ	3.3			V
	Minimum Output Voltage	V_{CM} =2.1V			22	mV
I_{OUT}	Output current[5]	Sourcing, V_{OUT}= 1.65V, R_G = 150kΩ		5		mA
C_{LOAD}	Max Output Capacitance Load[5]			30		pF

(1) Electrical Table values apply only for factory testing conditions at the temperature indicated. Factory testing conditions result in very limited self-heating of the device such that T_J = T_A. No assurance of parametric performance is indicated in the electrical tables under conditions of internal self-heating where T_J > T_A.
(2) All limits are specified by testing, design, or statistical analysis.
(3) Typical values represent the most likely parametric norm at the time of characterization. Actual typical values may vary over time and will also depend on the application and configuration. The typical values are not tested and are not specified on shipped production material.
(4) Offset voltage temperature drift is determined by dividing the change in V_{OS} at the temperature extremes by the total temperature change.
(5) This parameter is specified by design and/or characterization and is not tested in production.
(6) Positive Bias Current corresponds to current flowing into the device.
(7) The number specified is the average of rising and falling slew rates and measured at 90% to 10%.

Copyright © 2012–2013, Texas Instruments Incorporated

12V Electrical Characteristics[1]

Unless otherwise specified, all limits ensured for at T_A = 25°C, V_S=V^+-V^-, V^+ = 12V, V^- = 0V, −2V < V_{CM} < 76V, R_g= 25kΩ, R_L = 10 kΩ. **Boldface** limits apply at the temperature extremes.

Symbol	Parameter	Condition	Min[2]	Typ[3]	Max[2]	Units
V_{OFFSET}	Input Offset Voltage	V_{CM} = 2.1V	-1 **-1.7**		1 **1.7**	mV
TCV_{OS}	Input Offset Voltage Drift[4][5]	V_{CM} = 2.1V			7	μV/°C
I_B	Input Bias Current[6]	V_{CM} = 2.1V		13	23	μA
e_{ni}	Input Voltage Noise[5]	f > 10 kHz, R_G = 5 kΩ		120		nV/√Hz
$V_{SENSE(MAX)}$	Max Input Sense Voltage[5]	V_{CM} =12V, R_G = 5 kΩ		600		mV
Gain A_V	Adjustable Gain Setting[5]	V_{CM} = 12V	1		100	V/V
Gm	Transconductance = 1/R_{IN}	V_{CM} = 2.1V		200		μA/V
	Accuracy	V_{CM} = 2.1V	-2 **-3.4**		2 **3.4**	%
	Gm drift[5]	−40°C to 125°C, V_{CM} =2.1V			140	ppm /°C
PSRR	Power Supply Rejection Ratio	V_{CM} = 2.1V, 2.7V <V^+ < 12V,	85			dB
CMRR	Common Mode Rejection Ratio	2.1V <V_{CM} < 76V	95			dB
		–2V <V_{CM} < 2.1V	55			
SR	Slew Rate[7][5]	V_{CM} = 5V, C_G = 4 pF, V_{SENSE} from 100 mV to 500 mV, C_L = 30 pF, R_L=1MΩ		0.6		V/μs
I_S	Supply Current	V_{CM} = 2.1V		555	845 **1123**	uA
		V_{CM} = −2V		2200	2900 **3110**	
V_{OUT}	Maximum Output Voltage	V_{CM} = 12V, R_G= 500kΩ,	10			V
	Minimum Output Voltage	V_{CM} = 2.1V			24	mV
I_{OUT}	Output current[5]	Sourcing, V_{OUT}= 5.25V, R_G = 150kΩ		5		mA
C_{LOAD}	Max Output Capacitance Load[5]			30		pF

(1) Electrical Table values apply only for factory testing conditions at the temperature indicated. Factory testing conditions result in very limited self-heating of the device such that T_J = T_A. No assurance of parametric performance is indicated in the electrical tables under conditions of internal self-heating where T_J > T_A.
(2) All limits are specified by testing, design, or statistical analysis.
(3) Typical values represent the most likely parametric norm at the time of characterization. Actual typical values may vary over time and will also depend on the application and configuration. The typical values are not tested and are not specified on shipped production material.
(4) Offset voltage temperature drift is determined by dividing the change in V_{OS} at the temperature extremes by the total temperature change.
(5) This parameter is specified by design and/or characterization and is not tested in production.
(6) Positive Bias Current corresponds to current flowing into the device.
(7) The number specified is the average of rising and falling slew rates and measured at 90% to 10%.

Copyright © 2012–2013, Texas Instruments Incorporated

Typical Performance Characteristics

Unless otherwise specified: T_A = 25°C, V_S=V^+-V^-, V_{SENSE}= +IN - (-IN), R_L = 10 kΩ.

Supply Curent vs. Supply Voltage for V_{CM} = 2V

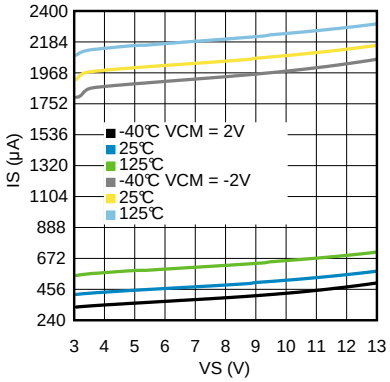

Figure 2.

Supply Current vs. V_{CM}

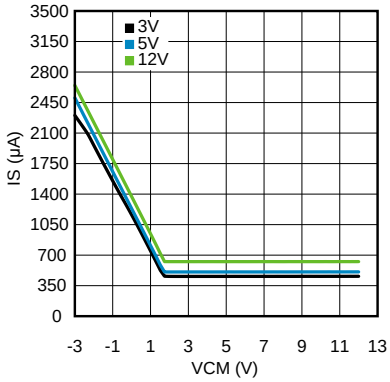

Figure 3.

AC PSRR vs. Frequency

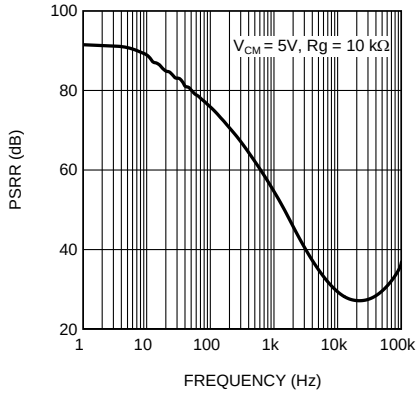

Figure 4.

AC CMRR vs. Frequency

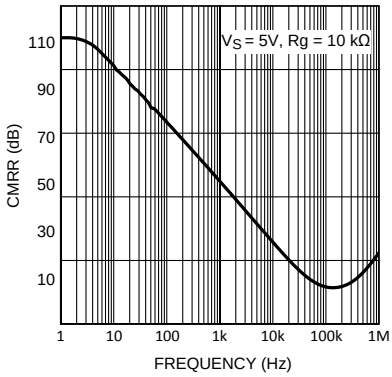

Figure 5.

CMRR vs. High V_{CM}

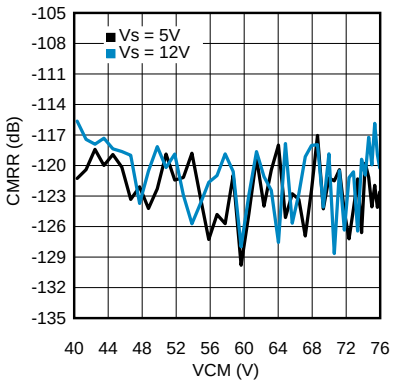

Figure 6.

Gain vs. Frequency (BW = 1kHz)

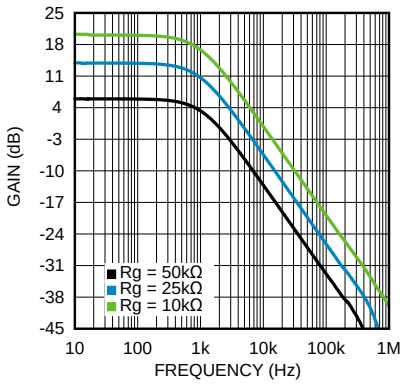

Figure 7.

Typical Performance Characteristics (continued)

Unless otherwise specified: T_A = 25°C, V_S=V^+-V^-, V_{SENSE}= +IN - (-IN), R_L = 10 kΩ.

Gain vs. Frequency (BW = 35kHz)

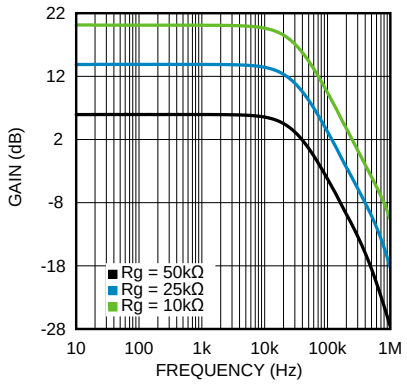

Figure 8.

Gain Accuracy vs. V_{CM}

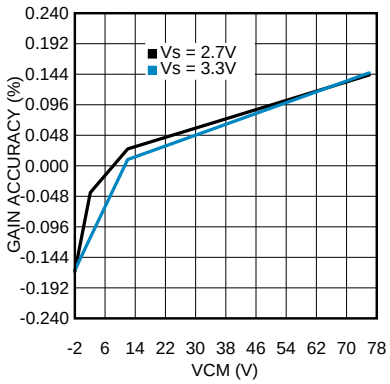

Figure 9.

Gain Accuracy vs. V_{CM}

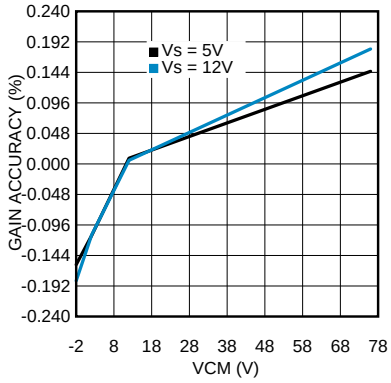

Figure 10.

V_{OUT} vs. V_{SENSE}

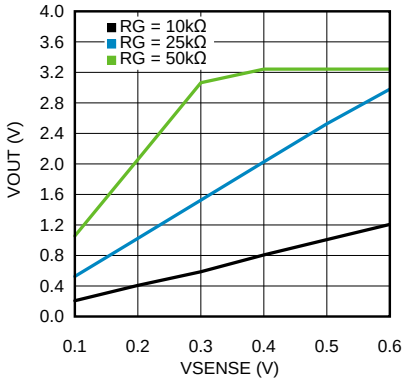

Figure 11.

V_{OUT_MAX} vs. Gain at Vs = 2.7V

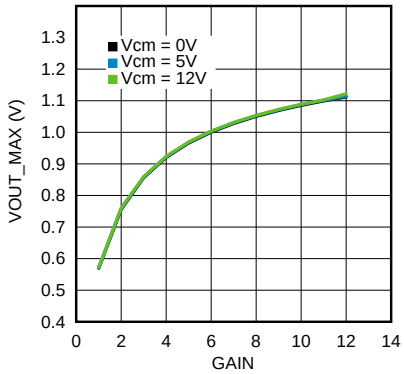

Figure 12.

V_{OUT_MAX} vs. Gain at Vs = 5.0V

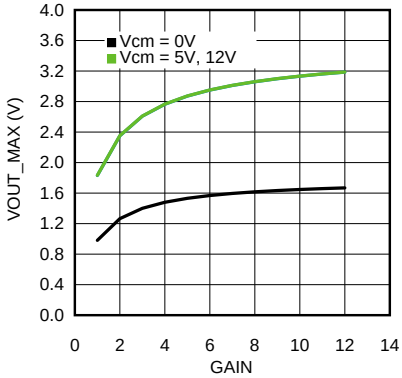

Figure 13.

Copyright © 2012–2013, Texas Instruments Incorporated

Typical Performance Characteristics (continued)

Unless otherwise specified: T_A = 25°C, V_S=V^+-V^-, V_{SENSE}= +IN - (-IN), R_L = 10 kΩ.

V_{OUT_MAX} vs. Gain at V_S = 12V

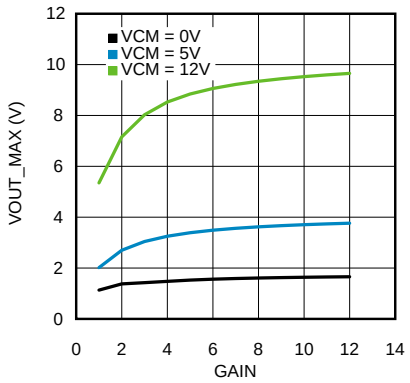

Figure 14.

V_{OUT_MAX} vs. V_S at V_{CM} = -2V

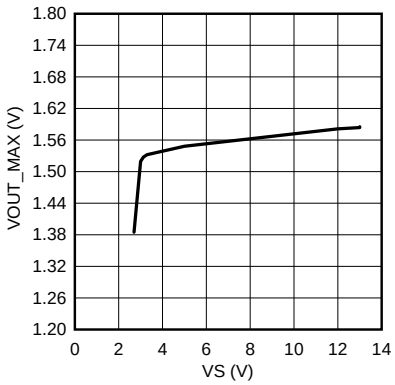

Figure 15.

V_{OUT_MAX} vs. V_S at V_{CM} = 2.1V

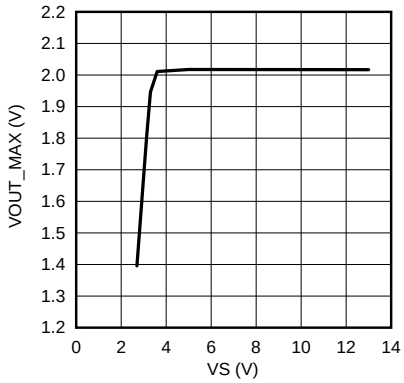

Figure 16.

Large Step Response at BW = 1kHz

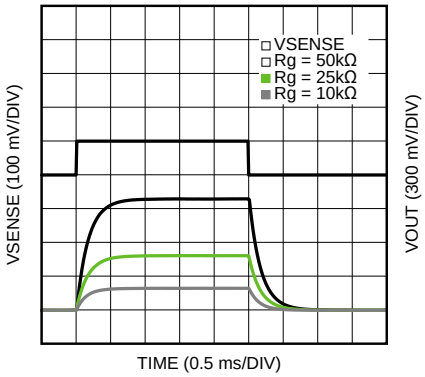

Figure 17.

Large Step Response at BW = 35 kHz

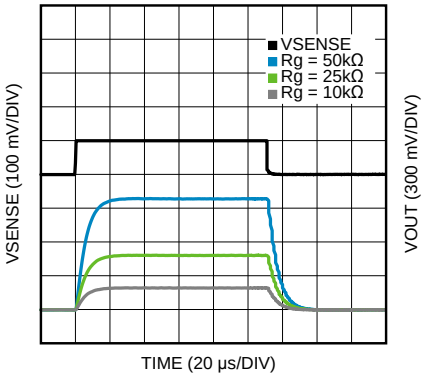

Figure 18.

Small Step Response at BW = 1 kHz

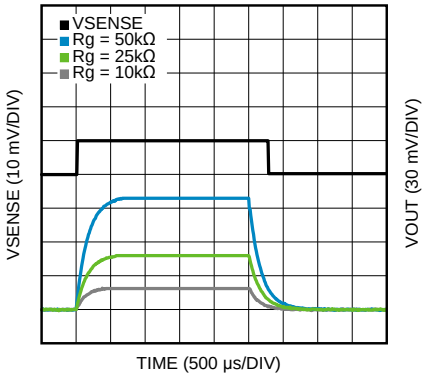

Figure 19.

Typical Performance Characteristics (continued)

Unless otherwise specified: T_A = 25°C, V_S=V^+-V^-, V_{SENSE}= +IN - (-IN), R_L = 10 kΩ.

Small Step Response at BW = 35 kHz

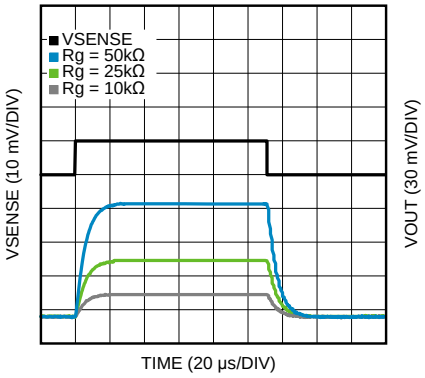

Figure 20.

Settling Time (Rise) at 1kHz

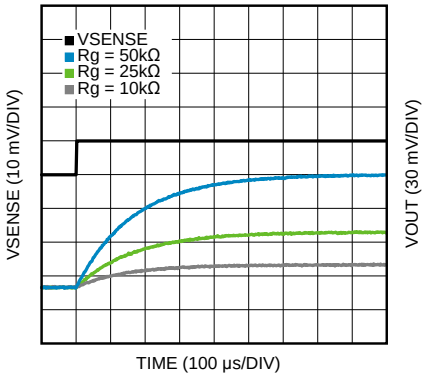

Figure 21.

Settling Time (Fall) at 1kHz

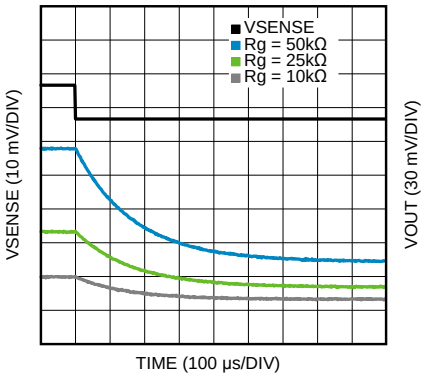

Figure 22.

Settling Time (Rise) at 35kHz

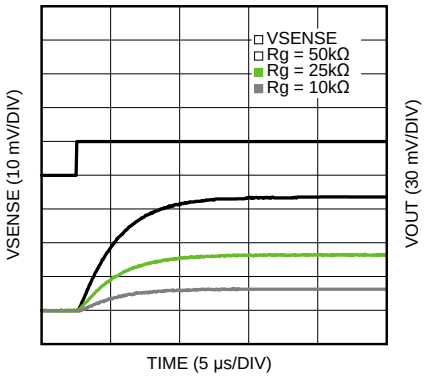

Figure 23.

Settling Time (Fall) at 35kHz

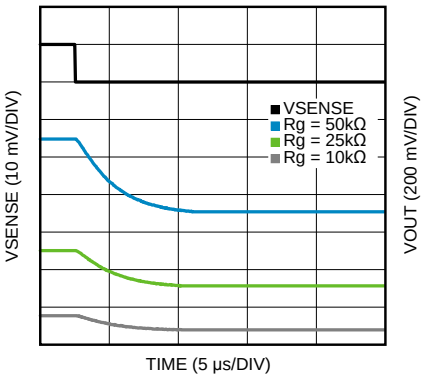

Figure 24.

Copyright © 2012–2013, Texas Instruments Incorporated

Typical Performance Characteristics (continued)

Unless otherwise specified: T_A = 25°C, V_S=V^+-V^-, V_{SENSE}= +IN - (-IN), R_L = 10 kΩ.

Common Mode Step Response (Rise) at 35 kHz

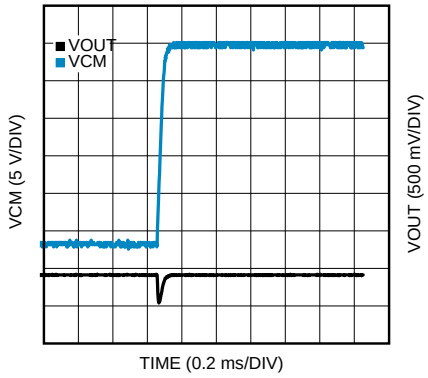

Figure 25.

Common Mode Step Response (Fall) at 35 kHz

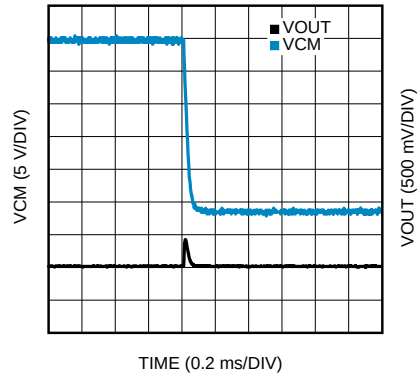

Figure 26.

Functional Description

GENERAL

The LMP8646 is a single supply precision current limiter with variable gain selected through an external resistor (R_G) and a variable bandwidth selected through an external capacitor (C_G) in parallel with R_G. Its common-mode of operation is -2V to +76V, and the LMP8646 has an buffered output to provide a low output impedance. More details of the LMP8646's functional description can be seen in the following subsections.

THEORY OF OPERATION

As seen from Figure 27, the sense current flowing through R_{SENSE} develops a voltage drop equal to V_{SENSE}. The high impedance inputs of the amplifier does not conduct this current and the high open loop gain of the sense amplifier forces its non-inverting input to the same voltage as the inverting input. In this way the voltage drop across R_{IN} matches V_{SENSE}. The current I_{IN} flowing through R_{IN} has the following equation:

$I_{IN} = V_{SENSE}/ R_{IN} = R_{SENSE}*I_{SENSE}/R_{IN}$

where

- R_{IN} = 1/Gm = 1/(200 µA/V) = 5 kOhm (1)

I_{IN} flows entirely across the external gain resistor R_G to develop a voltage drop equal to:

$V_{RG} = I_{IN}*R_G = (V_{SENSE}/R_{IN}) *R_G = [(R_{SENSE}*I_{SENSE}) / R_{IN}]*R_G$ (2)

This voltage is buffered and showed at the output with a very low impedance allowing a very easy interface of the LMP8646 with the feedback of many voltage regulators. This output voltage has the following equation:

$V_{OUT} = V_{RG} = [(R_{SENSE}*I_{SENSE}) / R_{IN}]*R_G$ (3)

$V_{OUT} = V_{SENSE}* R_G/R_{IN}$ (4)

$V_{OUT} = V_{SENSE}* R_G/(5\ kOhm)$ (5)

$V_{OUT} = V_{SENSE}*$ Gain

where

- Gain = R_G/R_{IN} (6)

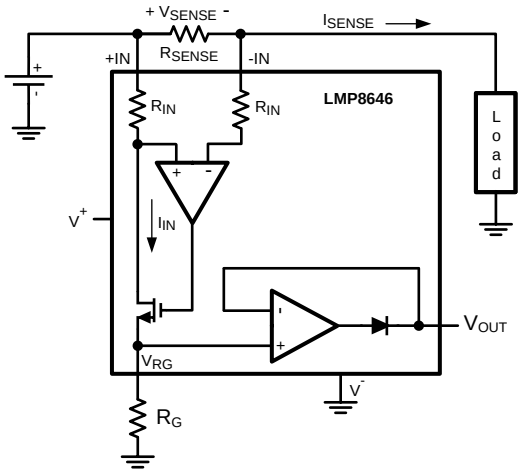

Figure 27. Current Monitor

Copyright © 2012–2013, Texas Instruments Incorporated

MAXIMUM OUTPUT VOLTAGE, V_{OUT_MAX}

The maximum output voltage, V_{OUT_MAX}, depends on the supply voltage, $V_S = V^+ - V^-$, and on the common mode voltage, V_{CM} = (+IN + -IN) / 2.

The following subsections show three cases to calculate for V_{OUT_MAX}.

Case 1: −2V < V_{CM} < 1.8V, and V_S > 2.7V

If $V_S \geq 5$ V,

then V_{OUT_MAX} = 1.3V.

Else if Vs = 2.7V,

then V_{OUT_MAX} = 1.1V.

Case 2: 1.8V < V_{CM} < V_S, and V_S > 3.3V

In this case, V_X is a fixed value that depends on the supply voltage. V_X has the following values:

If V_S = 12V, then V_X = 10V.

Else if V_S = 5V, then V_X = 3.3V .

Else if V_S = 2.7V, then V_X = 1.1V.

If $V_X \leq (V_{CM} - V_{SENSE} - 0.25)$,

then $V_{OUT_MAX} = V_X$.

Else,

$V_{OUT_MAX} = (V_{CM} - V_{SENSE} - 0.25)$.

For example, if V_{CM} = 4V, V_S = 5V (and thus V_X = 3.3V), V_{SENSE} = 0.1 V, then V_{OUT_MAX} = 3.3V because 3.3V ≤ (4 - 0.1 - 0.25).

Case 3: V_{CM} > V_S, and V_S > 2.7V

If V_S = 12V, then V_{OUT_MAX} = 10V.

Else if V_S = 5V, then V_{OUT_MAX} = 3.3V .

Else if V_S = 2.7V, then V_{OUT_MAX} = 1.1V.

Copyright © 2012–2013, Texas Instruments Incorporated

APPLICATIONS INFORMATION

OUTPUT ACCURACY

The output accuracy is the device error contributed by the LMP8646 based on its offset and gain errors. The LMP8646 output accuracy has the following equations:

$$\text{Output Accuracy} = \left| \frac{V_{OUT_THEO} - V_{OUT_CAL}}{V_{OUT_THEO}} \right| \times 100(\%)$$

$$\text{where } V_{OUT_THEO} = (V_{SENSE}) \times \frac{R_G}{1/Gm}$$

$$\text{and } V_{OUT_CALC} = \frac{(V_{SENSE} + V_{OFFSET}) \times R_G}{1/[Gm\ (1 + Gm_Accuracy)]}$$

Output Accuracy Equations (7)

For example, assume V_{SENSE} = 100 mV, R_G = 10 kOhm, and it is known that V_{OFFSET} = 1 mV and Gm_Accuracy = 2% (Electrical Characteristics Table), then the output accuracy can be calculated as:

$$V_{OUT_THEO} = (100\ \text{mV}) \times \frac{10\ \text{k}\Omega}{1/(200\mu)} = 0.2\text{V}$$

$$V_{OUT_CALC} = \frac{(100\ \text{mV} + 1\ \text{mV}) \times 10\ \text{k}\Omega}{1/[200\mu\ (1 + 2/100)]} = 0.20604\text{V}$$

$$\text{Output Accuracy} = \left| \frac{0.2\text{V} - 0.20604\text{V}}{0.2\text{V}} \right| \times 100 = 3.02\%$$

Output Accuracy Example (8)

In fact, as V_{SENSE} decreases, the output accuracy worsens as seen in Figure 28. These equations provide a valuable tool to estimate how the LMP8646 affects the overall system performance. Knowing this information allows the system designer to pick the appropriate external resistances (R_{SENSE} and R_G) to adjust for the tolerable system error. Examples of this tolerable system error can be seen in the next sections.

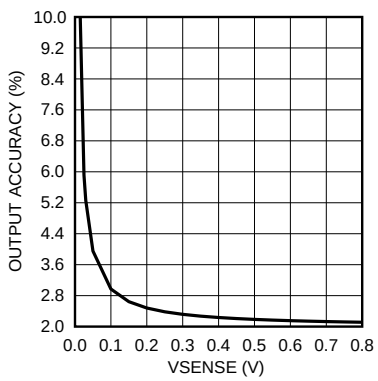

Figure 28. Output Accuracy vs. V_{SENSE}

SELECTION OF THE SENSE RESISTOR, R_{SENSE}

The accuracy of the current measurement also depends on the value of the shunt resistor R_{SENSE}. Its value depends on the application and is a compromise between small-signal accuracy and maximum permissible voltage loss in the load line.

R_{SENSE} is directly proportional to V_{SENSE} through the equation $R_{SENSE} = (V_{SENSE}) / (I_{SENSE})$. If V_{SENSE} is small, then there is a smaller voltage loss in the load line, but the output accuracy is worse because the LMP8646 offset error will contribute more. Therefore, high values of R_{SENSE} provide better output accuracy by minimizing the effects of offset, while low values of R_{SENSE} minimize the voltage loss in the load line. For most applications, best performance is obtained with an R_{SENSE} value that provides a V_{SENSE} of 100 mV to 200 mV.

Copyright © 2012–2013, Texas Instruments Incorporated

R_{SENSE} Consideration for System Error

The output accuracy described in the previous section talks about the error contributed just by the LMP8646. The system error, however, consists of the errors contributed by the LMP8646 as well as other external resistors such as R_{SENSE} and R_G. Let's rewrite the output accuracy equation for the system error assuming that R_{SENSE} is non-ideal and R_G is ideal. This equation can be seen as:

$$\text{System Error} = \left|\frac{V_{OUT_THEO} - V_{OUT_CAL}}{V_{OUT_THEO}}\right| \times 100(\%)$$

$$\text{where } V_{OUT_THEO} = (R_{SENSE} \times I_{SENSE}) \times \frac{R_G}{1/Gm}$$

$$\text{and } V_{OUT_CALC} = \frac{[R_{SENSE}\,(1+\text{Tolerance}) \times I_{SENSE} + V_{OFFSET}] \times R_G}{1/[Gm\,(1 + Gm_Accuracy)]}$$

System Error Example Assuming R_{SENSE} is Non-ideal and R_G is Ideal (9)

Continuing from the previous output accuracy example, we can calculate for the system error assuming that R_{SENSE} = 100 mOhm (with 1% tolerance), I_{SENSE} = 1A, and R_G = 10 kOhm. From the Electrical Characteristics Table, it is also known that V_{OFFSET} = 1 mV and Gm_Accuracy = 2%.

$$V_{OUT_THEO} = (100\ m\Omega \times 1A) \times \frac{10\ k\Omega}{1/(200\mu)} = 0.2V$$

$$V_{OUT_CALC} = \frac{[100\ m\Omega\,(1+1/100) \times 1A + 1mV] \times 10\ k\Omega}{1/[200\mu\,(1 + 2/100)]} = 0.20808V$$

$$\text{System Error} = \left|\frac{0.2V - 0.20808V}{0.2V}\right| \times 100 = 4.04\%$$

System Error Example Assuming RSENSE is Non-ideal and RG is Ideal (10)

Because an R_{SENSE} tolerance will increase the system error, we recommend selecting an R_{SENSE} resistor with low tolerance.

SELECTION OF THE GAIN RESISTOR, R_G

For the LMP8646, the gain is selected through an external resistor connected to the R_G pin. The voltage at this R_G pin is equal to V_{OUT}, which has the equation $V_{OUT} = V_{RG} = V_{SENSE} * R_G/(5\ kOhm)$.

In fact, R_G must be chosen such that the V_{OUT} does not exceed its maximum ratings (V_{OUT_MAX}) as described in the MAXIMUM OUTPUT VOLTAGE, V_{OUT_MAX} section. Using this V_{OUT_MAX} and the equation $R_{G_MAX} = (V_{OUT_MAX} * 5kOhm) / (V_{SENSE})$, a plot of R_{G_MAX} vs. V_{SENSE} can be seen for three cases below. Use these plots to help select the appropriate R_G value so that V_{SENSE} and V_{OUT} stay within the recommended operating ratings. Since these plots are for R_{G_MAX}, all of the combinations of R_G below the curve are allowed.

Case 1: −2V < V_{CM} < 1.8V, and V_S > 3.3V

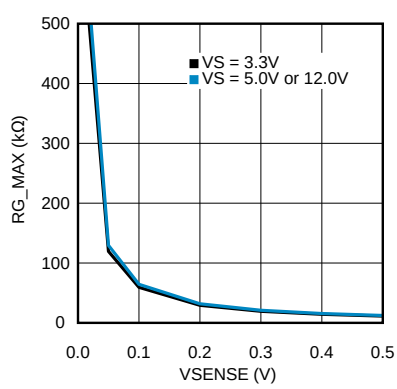

Figure 29. Allowed R_G for CASE 1

Case 2: 1.8V < V_{CM} < V_S, and V_S > 3.3V

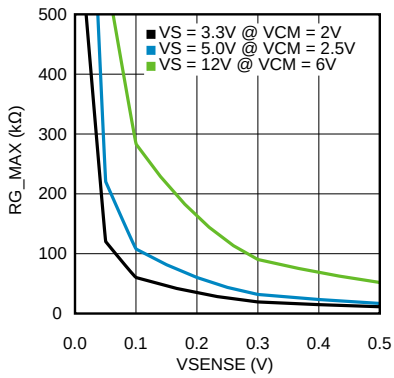

Figure 30. Allowed R_G for CASE 2

Case 3: V_{CM} > V_S, and V_S > 3.3V

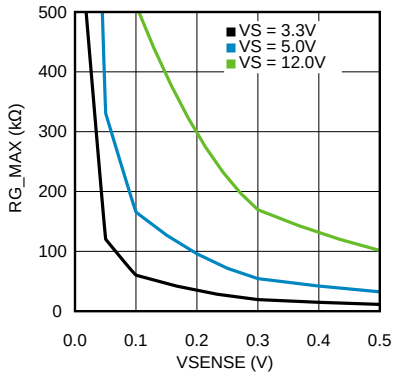

Figure 31. Allowed R_G for CASE 3

R_G Consideration for System Error

The previous section discussed the system error assuming that R_{SENSE} is non-ideal and R_G is ideal. This section expands the system error equation by assuming that both R_{SENSE} and R_G are non-ideal. This system error equation can be rewritten as:

$$\text{System Error} = \left| \frac{V_{OUT_THEO} - V_{OUT_CAL}}{V_{OUT_THEO}} \right| \times 100(\%)$$

$$\text{where } V_{OUT_THEO} = (R_{SENSE} \times I_{SENSE}) \times \frac{R_G}{1/Gm}$$

$$\text{and } V_{OUT_CALC} = \frac{[R_{SENSE}\,(1+\text{Tolerance}) \times I_{SENSE} + V_{OFFSET}] \times R_G\,(1+\text{Tolerance})}{1/[Gm\,(1 + Gm_Accuracy)]} \tag{11}$$

Continuing from the previous system error equation, we can recalculate for the system error assuming that R_G has a 1% tolerance.

Copyright © 2012–2013, Texas Instruments Incorporated

$$V_{OUT_THEO} = (100\ m\Omega\ \times 1A) \times \frac{10\ k\Omega}{1/(200\mu)} = 0.2V$$

$$V_{OUT_CALC} = \frac{[100\ m\Omega\ (1+1/100) \times 1A + 1mV] \times 10\ k\Omega\ (1+1/100)}{1/[200\mu\ (1 + 2/100)]} = 0.21016V$$

$$\text{System Error} = \left|\frac{0.2V - 0.21016V}{0.2V}\right| \times 100 = 5.08\% \tag{12}$$

Because an R_G tolerance will increase the system error, we recommend selecting an R_G resistor with low tolerance.

APPLICATION #1: CURRENT LIMITER WITH A CAPACITIVE LOAD

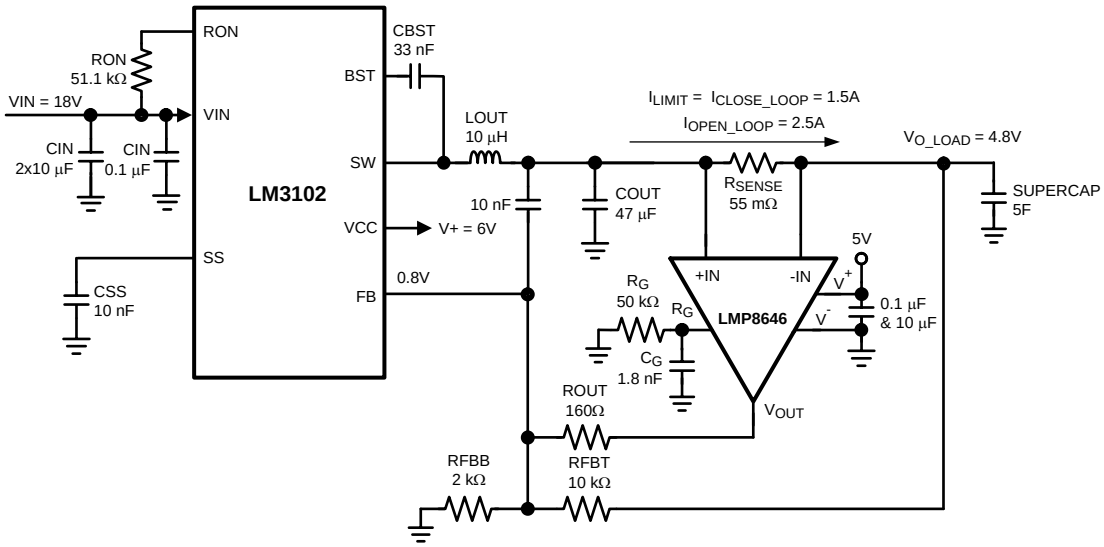

Figure 32. SuperCap Application with LM3102 Regulator

A supercap application requires a very high capacitive load to be charged. This example assumes the output capacitor is 5F with a limited sense current at 1.5A. The LM3102 will provide the current to charge the supercap, and the LMP8646 will monitor this current to make sure it does not exceed the desired 1.5A value.

This is done by connecting the LMP8646 output to the feedback pin of the LM3102, as shown in Figure 32. This feedback voltage at the FB pin is compared to a 0.8V internal reference. Any voltage above this 0.8V means the output current is above the desired value of 1.5A, and the LM3102 will reduce its output current to maintain the desired 0.8V at the FB pin.

The following steps show the design procedures for this supercap application. In summary, the steps consist of selecting the components for the voltage regulator, integrating the LMP8646 and selecting the proper values for its gain, bandwidth, and output resistor, and adjusting these components to yield the desired performance.

Step 1: Choose the components for the Regulator.

Refer to the LM3102 evaluation board application note (AN-1646) to select the appropriate components for the LM3102 voltage regulator.

Step 2: Choose the sense resistor, R_{SENSE}

R_{SENSE} sets the voltage V_{SENSE} between +IN and -IN and has the following equation:

$$R_{SENSE} = V_{OUT} / [(I_{LIMIT}) * (R_G / 5kOhm)] \tag{13}$$

In general, R_{SENSE} depends on the output voltage, limit current, and gain. Refer to section SELECTION OF THE SENSE RESISTOR, R_{SENSE} to choose the appropriate R_{SENSE} value; this example uses 55 mOhm.

Step 3: Choose the gain resistor, R_G, for LMP8646

R_G is chosen from the limited sense current. As stated, $V_{OUT} = (R_{SENSE} * I_{LIMIT}) * (R_G / 5kOhm)$. Since $V_{OUT} = V_{FB} = 0.8V$, the limited sense current is 1.5A, and R_{SENSE} is 55 mOhm, R_G can be calculated as:

$$R_G = (V_{OUT} * 5\ kOhm) / (R_{SENSE} * I_{LIMIT}) \quad (14)$$

$$R_G = (0.8 * 5\ kOhm) / (55\ mOhm * 1.5A) = 50\ kOhm\ (approximate) \quad (15)$$

Step 4: Choose the Bandwidth Capacitance, C_G.

The product of C_G and R_G determines the bandwidth for the LMP8646. Refer to the Typical Performance Characteristics plots to see the range for the LMP8646 bandwidth and gain. Since each application is very unique, the LMP8646 bandwidth capacitance, C_G, needs to be adjusted to fit the appropriate application.

Bench data has been collected for the supercap application with the LM3102 regulator, and we found that this application works best for a bandwidth of 500 Hz to 3 kHz. Operating outside of this recommended bandwidth range might create an undesirable load current ringing. We recommend choosing a bandwidth that is in the middle of this range and using the equation $C_G = 1/(2*pi*R_G*Bandwidth)$ to find C_G. For example, if the bandwidth is 1.75 kHz and R_G is 50 kOhm, then C_G is approximately 1.8 nF. After this selection, capture the plot for I_{LIMIT} and adjust C_G until a desired load current plot is obtained.

Step 5: Calculate the Output Accuracy and Tolerable System Error

Since the LMP8646 is a precision current limiter, the output current accuracy is extremely important. This accuracy is affected by the system error contributed by the LMP8646 device error and other errors contributed by external resistances, such as R_{SENSE} and R_G.

In this application, $V_{SENSE} = I_{LIMIT} * R_{SENSE} = 1.5A * 55\ mOhm = 0.0825V$, and $R_G = 50\ kOhm$. From the Electrical Characteristics Table, it is known that $V_{OFFSET} = 1\ mV$ and Gm_Accuracy = 2%. Using the equations shown in Equation 8, the output accuracy can be calculated as 3.24%.

After figuring out the LMP8646 output accuracy, choose a tolerable system error or the output current accuracy that is bigger than the LMP8646 output accuracy. This tolerable system error will be labeled as I_{ERROR}, and it has the equation $I_{ERROR} = (I_{MAX} - I_{LIMIT})/I_{MAX}$ (%). In this example, we will choose an I_{ERROR} of 5%, which will be used to calculate for ROUT shown in the next step.

Step 6: Choose the output resistor, ROUT

At startup, the capacitor is not charged yet and thus the output voltage of the LM3102 is very small. Therefore, at startup, the output current is at its maximum (I_{MAX}). When the output voltage is at its nominal, then the output current will settle to the desired limited value. Because a large current error is not desired, ROUT needs to be chosen to stabilize the loop with minimal initial startup current error. Follow the equations and example below to choose the appropriate value for ROUT to minimize this initial error.

As discussed in step 4, the allowable I_{ERROR} is 5%, where $I_{ERROR} = (I_{MAX} - I_{LIMIT})/I_{MAX}$ (%). Therefore, the maximum allowable current is calculated as: $I_{MAX} = I_{LIMIT}\ (1+ I_{ERROR}) = 1.5A * (1 + 5/100) = 1.575\ A$.

Next, use the formula below to calculate for ROUT:

$$ROUT = \frac{(I_{MAX} * R_{SENSE} * Gain - V_{FB})}{\frac{V_{FB}}{RFBB} - \frac{(V_{O_REG_MIN} - V_{FB})}{RFBT}} \quad (16)$$

For example, assume the minimum LM3102 output voltage, $V_{O_REG_MIN}$, is 0.6V, then ROUT can be calculated as ROUT = [1.575A * 55 mOhm * (49.9k / 5k) - 0.8] / [(0.8 / 2k) - (0.6 - 0.8) / 10k] = 153.6 Ohm.

Copyright © 2012–2013, Texas Instruments Incorporated

Populate ROUT with a resistor that is as close as possible to 153.6 Ohm (this application uses 160 Ohm). If the limited sense current has a gain error and is not 1.5A at any point in time, then adjust this ROUT value to obtain the desired limit current.

We recommend that the value for ROUT is at least 50 Ohm.

Step 7: Adjusting Components

Capture the output current and output voltage plots and adjust the components as necessary. The most common components to adjust are C_G to decrease the current ripple and ROUT to get a low current error. An example output current and voltage plot can be seen in Figure 33.

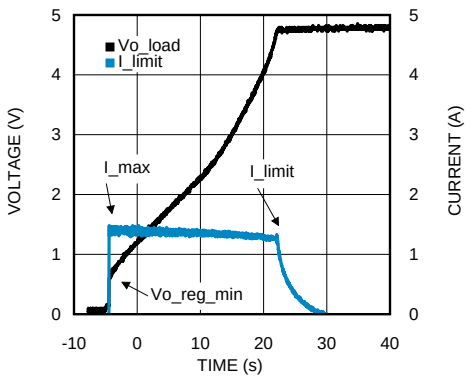

Figure 33. SuperCap Application with LM3102 Regulator Plot

APPLICATION #2: CURRENT LIMITER WITH A RESISTIVE LOAD

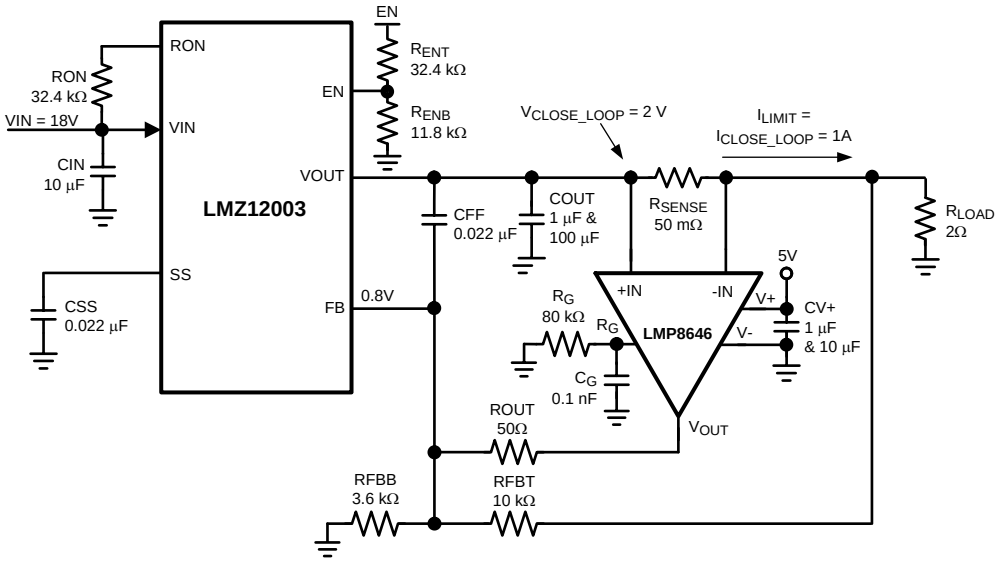

Figure 34. Resistive Load Application with LMZ12003 Regulator

This subsection describes the design process for a resistive load application with the LMZ12003 voltage regulator as seen in Figure 34. To see the current limiting capability of the LMP8646, the open-loop current must be greater than the close-loop current. An open-loop occurs when the LMP8646 output is not connected the LMZ12003's feedback pin. For this example, we will let the open-loop current to be 1.5A and the close-loop current, I_{LIMIT}, to be 1A.

Step 1: Choose the components for the Regulator.

Refer to the LMZ12003 application note (AN-2031) to select the appropriate components for the LMZ12003.

Step 2: Choose the sense resistor, R_{SENSE}

R_{SENSE} sets the voltage V_{SENSE} between +IN and -IN and has the following equation:

$$R_{SENSE} = V_{OUT} / [(I_{LIMIT}) * (R_G / 5kOhm)] \quad (17)$$

In general, R_{SENSE} depends on the output voltage, limit current, and gain. Refer to section SELECTION OF THE SENSE RESISTOR, R_{SENSE} to choose the appropriate R_{SENSE} value; this example uses 50 mOhm.

Step 3: Choose the gain resistor, R_G, for LMP8646

R_G is chosen from I_{LIMIT}. As stated, $V_{OUT} = (R_{SENSE} * I_{LIMIT}) * (R_G / 5kOhm)$. Since $V_{OUT} = V_{FB} = 0.8V$, $I_{LIMIT} = 1A$, and $R_{SENSE} = 50$ mOhm , R_G can be calculated as:

$$R_G = (V_{OUT} * 5\ kOhm) / (R_{SENSE} * I_{LIMIT}) \quad (18)$$

$$R_G = (0.8 * 5\ kOhm) / (50\ mOhm * 1A) = 80\ kOhm \quad (19)$$

Step 4: Choose the Bandwidth Capacitance, C_G.

The product of C_G and R_G determines the bandwidth for the LMP8646. Refer to the Typical Performance Characteristics plots to see the range for the LMP8646 bandwidth and gain. Since each application is very unique, the LMP8646 bandwidth capacitance, C_G, needs to be adjusted to fit the appropriate application.

Bench data has been collected for this resistive load application with the LMZ12003 regulator, and we found that this application works best for a bandwidth of 2 kHz to 30 kHz. Operating anything less than this recommended bandwidth might prevent the LMP8646 from quickly limiting the current. We recommend choosing a bandwidth that is in the middle of this range and using the equation: $C_G = 1/(2*pi*R_G*Bandwidth)$ to find C_G (this example uses a C_G value of 0.1nF). After this selection, capture the load current plot and adjust C_G until a desired output current plot is obtained.

Step 5: Choose the output resistor, ROUT, for the LMP8646

ROUT plays a very small role in the overall system performance for the resistive load application. ROUT was important in the supercap application because it affects the initial current error. Because current is directly proportional to voltage for a resistive load, the output current is not large at startup. The bigger the ROUT, the longer it takes for the output voltage to reach its final value. We recommend that the value for ROUT is at least 50 Ohm, which is the chosen value for this example.

Step 6: Adjusting Components

Capture the output current and output voltage plots and adjust the components as necessary. The most common component to adjust is C_G for the bandwidth. An example of the output current and voltage plot can be seen in Figure 35.

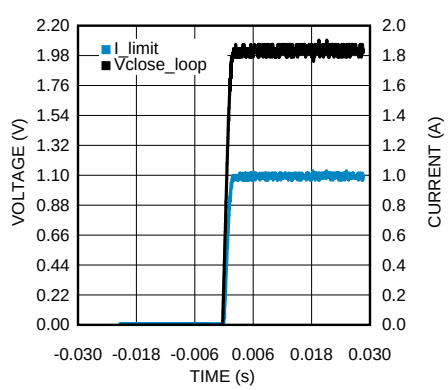

Figure 35. Plot for the Resistive Load Application with LMZ12003 Regulator Plot

Copyright © 2012–2013, Texas Instruments Incorporated

APPLICATION #3: CURRENT LIMITER WITH A LOW-DROPOUT REGULATOR AND RESISTIVE LOAD

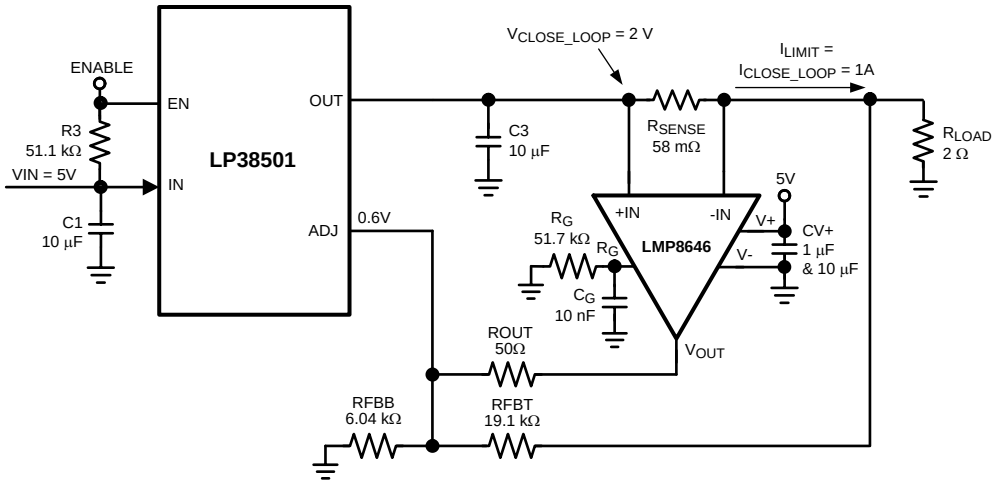

Figure 36. Resistive Load Application with LP38501 Regulator

This next example is the same as the last example, except that the regulator is now a low-dropout regulator, the LP38501, as seen in Figure 36. For this example, we will let the open-loop current to be 1.25A and the close-loop current, I_{LIMIT}, to be 1A.

Step 1: Choose the components for the Regulator.

Refer to the LP38501 application note (AN-1830) to select the appropriate components for the LP38501.

Step 2: Choose the sense resistor, R_{SENSE}

R_{SENSE} sets the voltage V_{SENSE} between +IN and -IN and has the following equation:

$$R_{SENSE} = V_{OUT} / [(I_{LIMIT}) * (R_G / 5kOhm)] \quad (20)$$

In general, R_{SENSE} depends on the output voltage, limit current, and gain. Refer to section SELECTION OF THE SENSE RESISTOR, R_{SENSE} to choose the appropriate R_{SENSE} value; this example uses 58 mOhm.

Step 3: Choose the gain resistor, R_G, for LMP8646

R_G is chosen from I_{LIMIT}. As stated, $V_{OUT} = (R_{SENSE} * I_{LIMIT}) * (R_G / 5kOhm)$. Since V_{OUT} = ADJ = 0.6V, I_{LIMIT} = 1A, and R_{SENSE} = 58 mOhm , R_G can be calculated as:

$$R_G = (V_{OUT} * 5\ kOhm) / (R_{SENSE} * I_{LIMIT}) \quad (21)$$

$$R_G = (0.6 * 5\ kOhm) / (58\ mOhm * 1A) = 51.7\ kOhm \quad (22)$$

Step 4: Choose the Bandwidth Capacitance, C_G.

The product of C_G and R_G determines the bandwidth for the LMP8646. Refer to the Typical Performance Characteristics plots to see the range for the LMP8646 bandwidth and gain. Since each application is very unique, the LMP8646 bandwidth capacitance, C_G, needs to be adjusted to fit the appropriate application.

Bench data has been collected for this resistive load application with the LP38501 regulator, and we found that this application works best for a bandwidth of 50 Hz to 300 Hz. Operating anything larger than this recommended bandwidth might prevent the LMP8646 from quickly limiting the current. We recommend choosing a bandwidth that is in the middle of this range and using the equation: $C_G = 1/(2*pi*R_G*Bandwidth)$ to find C_G (this example uses a C_G value of 10 nF). After this selection, capture the plot for I_{SENSE} and adjust C_G until a desired sense current plot is obtained.

Step 5: Choose the output resistor, ROUT, for the LMP8646

ROUT plays a very small role in the overall system performance for the resistive load application. ROUT was important in the supercap application because it affects the initial current error. Because current is directly proportional to voltage for a resistive load, the output current is not large at startup. The bigger the ROUT, the longer it takes for the output voltage to reach its final value. We recommend that the value for ROUT is at least 50 Ohm, which is the value we used for this example.

Step 6: Adjusting Components

Capture the output current and output voltage plots and adjust the components as necessary. The most common component to adjust is C_G for the bandwidth. An example plot of the output current and voltage can be seen in Figure 37.

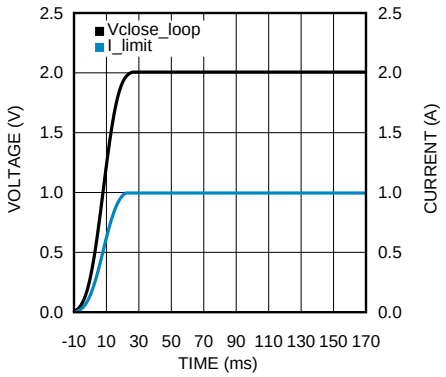

Figure 37. Plot for the Resistive Load Application with the LP38501 LDO Regulator

Copyright © 2012–2013, Texas Instruments Incorporated

REVISION HISTORY

Changes from Original (March 2013) to Revision A	Page
• Changed layout of National Data Sheet to TI format	22

PACKAGING INFORMATION

Orderable Device	Status (1)	Package Type	Package Drawing	Pins	Package Qty	Eco Plan (2)	Lead/Ball Finish	MSL Peak Temp (3)	Op Temp (°C)	Top-Side Markings (4)	Samples
LMP8646MK/NOPB	ACTIVE	SOT	DDC	6	1000	Green (RoHS & no Sb/Br)	CU NIPDAU	Level-1-260C-UNLIM		AK7A	Samples
LMP8646MKE/NOPB	ACTIVE	SOT	DDC	6	250	Green (RoHS & no Sb/Br)	CU NIPDAU	Level-1-260C-UNLIM		AK7A	Samples
LMP8646MKX/NOPB	ACTIVE	SOT	DDC	6	3000	Green (RoHS & no Sb/Br)	CU NIPDAU	Level-1-260C-UNLIM		AK7A	Samples

(1) The marketing status values are defined as follows:
ACTIVE: Product device recommended for new designs.
LIFEBUY: TI has announced that the device will be discontinued, and a lifetime-buy period is in effect.
NRND: Not recommended for new designs. Device is in production to support existing customers, but TI does not recommend using this part in a new design.
PREVIEW: Device has been announced but is not in production. Samples may or may not be available.
OBSOLETE: TI has discontinued the production of the device.

(2) Eco Plan - The planned eco-friendly classification: Pb-Free (RoHS), Pb-Free (RoHS Exempt), or Green (RoHS & no Sb/Br) - please check http://www.ti.com/productcontent for the latest availability information and additional product content details.
TBD: The Pb-Free/Green conversion plan has not been defined.
Pb-Free (RoHS): TI's terms "Lead-Free" or "Pb-Free" mean semiconductor products that are compatible with the current RoHS requirements for all 6 substances, including the requirement that lead not exceed 0.1% by weight in homogeneous materials. Where designed to be soldered at high temperatures, TI Pb-Free products are suitable for use in specified lead-free processes.
Pb-Free (RoHS Exempt): This component has a RoHS exemption for either 1) lead-based flip-chip solder bumps used between the die and package, or 2) lead-based die adhesive used between the die and leadframe. The component is otherwise considered Pb-Free (RoHS compatible) as defined above.
Green (RoHS & no Sb/Br): TI defines "Green" to mean Pb-Free (RoHS compatible), and free of Bromine (Br) and Antimony (Sb) based flame retardants (Br or Sb do not exceed 0.1% by weight in homogeneous material)

(3) MSL, Peak Temp. -- The Moisture Sensitivity Level rating according to the JEDEC industry standard classifications, and peak solder temperature.

(4) Only one of markings shown within the brackets will appear on the physical device.

Important Information and Disclaimer: The information provided on this page represents TI's knowledge and belief as of the date that it is provided. TI bases its knowledge and belief on information provided by third parties, and makes no representation or warranty as to the accuracy of such information. Efforts are underway to better integrate information from third parties. TI has taken and continues to take reasonable steps to provide representative and accurate information but may not have conducted destructive testing or chemical analysis on incoming materials and chemicals. TI and TI suppliers consider certain information to be proprietary, and thus CAS numbers and other limited information may not be available for release.

In no event shall TI's liability arising out of such information exceed the total purchase price of the TI part(s) at issue in this document sold by TI to Customer on an annual basis.

TAPE AND REEL INFORMATION

REEL DIMENSIONS

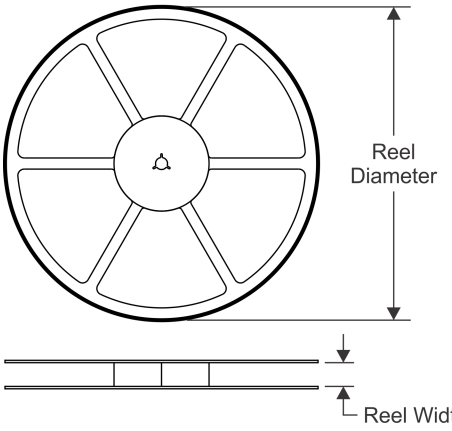

TAPE DIMENSIONS

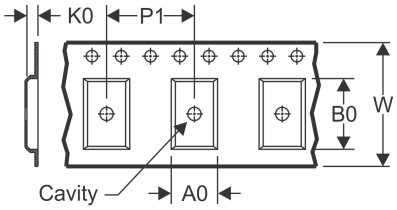

A0	Dimension designed to accommodate the component width
B0	Dimension designed to accommodate the component length
K0	Dimension designed to accommodate the component thickness
W	Overall width of the carrier tape
P1	Pitch between successive cavity centers

QUADRANT ASSIGNMENTS FOR PIN 1 ORIENTATION IN TAPE

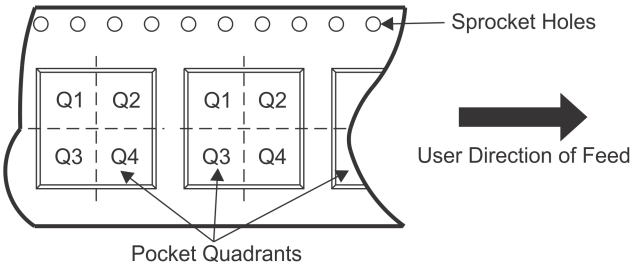

*All dimensions are nominal

Device	Package Type	Package Drawing	Pins	SPQ	Reel Diameter (mm)	Reel Width W1 (mm)	A0 (mm)	B0 (mm)	K0 (mm)	P1 (mm)	W (mm)	Pin1 Quadrant
LMP8646MK/NOPB	SOT	DDC	6	1000	178.0	8.4	3.2	3.2	1.4	4.0	8.0	Q3
LMP8646MKE/NOPB	SOT	DDC	6	250	178.0	8.4	3.2	3.2	1.4	4.0	8.0	Q3
LMP8646MKX/NOPB	SOT	DDC	6	3000	178.0	8.4	3.2	3.2	1.4	4.0	8.0	Q3

TAPE AND REEL BOX DIMENSIONS

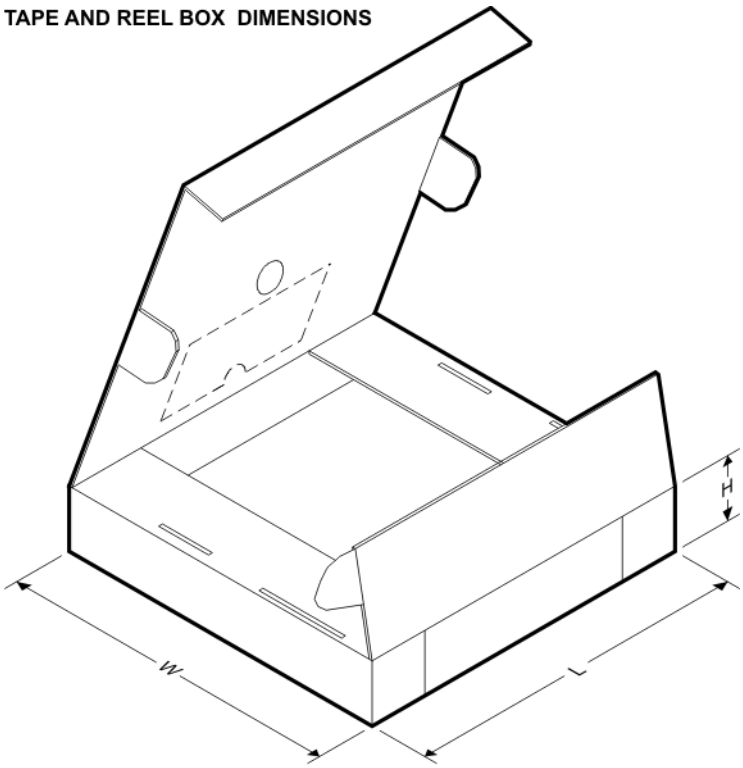

*All dimensions are nominal

Device	Package Type	Package Drawing	Pins	SPQ	Length (mm)	Width (mm)	Height (mm)
LMP8646MK/NOPB	SOT	DDC	6	1000	210.0	185.0	35.0
LMP8646MKE/NOPB	SOT	DDC	6	250	210.0	185.0	35.0
LMP8646MKX/NOPB	SOT	DDC	6	3000	210.0	185.0	35.0

DDC (R–PDSO–G6) PLASTIC SMALL–OUTLINE

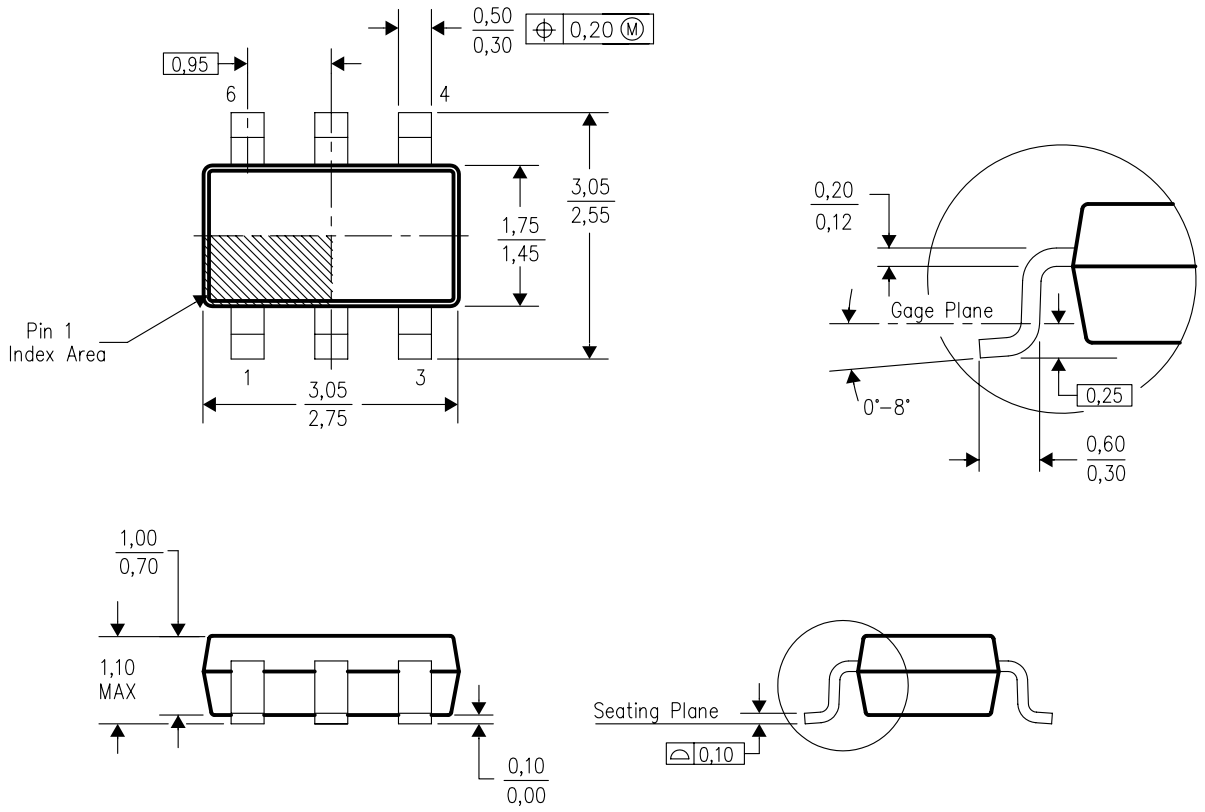

4204403–3/E 06/05

NOTES:
A. All linear dimensions are in millimeters.
B. This drawing is subject to change without notice.
C. Body dimensions do not include mold flash or protrusion.
D. Falls within JEDEC MO–193 variation AA (6 pin).

IMPORTANT NOTICE

Texas Instruments Incorporated and its subsidiaries (TI) reserve the right to make corrections, enhancements, improvements and other changes to its semiconductor products and services per JESD46, latest issue, and to discontinue any product or service per JESD48, latest issue. Buyers should obtain the latest relevant information before placing orders and should verify that such information is current and complete. All semiconductor products (also referred to herein as “components”) are sold subject to TI’s terms and conditions of sale supplied at the time of order acknowledgment.

TI warrants performance of its components to the specifications applicable at the time of sale, in accordance with the warranty in TI’s terms and conditions of sale of semiconductor products. Testing and other quality control techniques are used to the extent TI deems necessary to support this warranty. Except where mandated by applicable law, testing of all parameters of each component is not necessarily performed.

TI assumes no liability for applications assistance or the design of Buyers’ products. Buyers are responsible for their products and applications using TI components. To minimize the risks associated with Buyers’ products and applications, Buyers should provide adequate design and operating safeguards.

TI does not warrant or represent that any license, either express or implied, is granted under any patent right, copyright, mask work right, or other intellectual property right relating to any combination, machine, or process in which TI components or services are used. Information published by TI regarding third-party products or services does not constitute a license to use such products or services or a warranty or endorsement thereof. Use of such information may require a license from a third party under the patents or other intellectual property of the third party, or a license from TI under the patents or other intellectual property of TI.

Reproduction of significant portions of TI information in TI data books or data sheets is permissible only if reproduction is without alteration and is accompanied by all associated warranties, conditions, limitations, and notices. TI is not responsible or liable for such altered documentation. Information of third parties may be subject to additional restrictions.

Resale of TI components or services with statements different from or beyond the parameters stated by TI for that component or service voids all express and any implied warranties for the associated TI component or service and is an unfair and deceptive business practice. TI is not responsible or liable for any such statements.

Buyer acknowledges and agrees that it is solely responsible for compliance with all legal, regulatory and safety-related requirements concerning its products, and any use of TI components in its applications, notwithstanding any applications-related information or support that may be provided by TI. Buyer represents and agrees that it has all the necessary expertise to create and implement safeguards which anticipate dangerous consequences of failures, monitor failures and their consequences, lessen the likelihood of failures that might cause harm and take appropriate remedial actions. Buyer will fully indemnify TI and its representatives against any damages arising out of the use of any TI components in safety-critical applications.

In some cases, TI components may be promoted specifically to facilitate safety-related applications. With such components, TI’s goal is to help enable customers to design and create their own end-product solutions that meet applicable functional safety standards and requirements. Nonetheless, such components are subject to these terms.

No TI components are authorized for use in FDA Class III (or similar life-critical medical equipment) unless authorized officers of the parties have executed a special agreement specifically governing such use.

Only those TI components which TI has specifically designated as military grade or “enhanced plastic” are designed and intended for use in military/aerospace applications or environments. Buyer acknowledges and agrees that any military or aerospace use of TI components which have ***not*** been so designated is solely at the Buyer's risk, and that Buyer is solely responsible for compliance with all legal and regulatory requirements in connection with such use.

TI has specifically designated certain components as meeting ISO/TS16949 requirements, mainly for automotive use. In any case of use of non-designated products, TI will not be responsible for any failure to meet ISO/TS16949.

Products		**Applications**	
Audio	www.ti.com/audio	Automotive and Transportation	www.ti.com/automotive
Amplifiers	amplifier.ti.com	Communications and Telecom	www.ti.com/communications
Data Converters	dataconverter.ti.com	Computers and Peripherals	www.ti.com/computers
DLP® Products	www.dlp.com	Consumer Electronics	www.ti.com/consumer-apps
DSP	dsp.ti.com	Energy and Lighting	www.ti.com/energy
Clocks and Timers	www.ti.com/clocks	Industrial	www.ti.com/industrial
Interface	interface.ti.com	Medical	www.ti.com/medical
Logic	logic.ti.com	Security	www.ti.com/security
Power Mgmt	power.ti.com	Space, Avionics and Defense	www.ti.com/space-avionics-defense
Microcontrollers	microcontroller.ti.com	Video and Imaging	www.ti.com/video
RFID	www.ti-rfid.com		
OMAP Applications Processors	www.ti.com/omap	**TI E2E Community**	e2e.ti.com
Wireless Connectivity	www.ti.com/wirelessconnectivity		

Mailing Address: Texas Instruments, Post Office Box 655303, Dallas, Texas 75265
Copyright © 2013, Texas Instruments Incorporated