Stellaris® LM3S2911 Microcontroller

DATA SHEET

DS-LM3S2911-11108

Copyright © 2007-2011
Texas Instruments Incorporated

Copyright

Copyright © 2007-2011 Texas Instruments Incorporated All rights reserved. Stellaris® and StellarisWare® are registered trademarks of Texas Instruments Incorporated. ARM and Thumb are registered trademarks and Cortex is a trademark of ARM Limited. Other names and brands may be claimed as the property of others.

PRODUCTION DATA information is current as of publication date. Products conform to specifications per the terms of Texas Instruments standard warranty. Production processing does not necessarily include testing of all parameters.

Please be aware that an important notice concerning availability, standard warranty, and use in critical applications of Texas Instruments semiconductor products and disclaimers thereto appears at the end of this data sheet.

Texas Instruments Incorporated
108 Wild Basin, Suite 350
Austin, TX 78746
http://www.ti.com/stellaris
http://www-k.ext.ti.com/sc/technical-support/product-information-centers.htm

Table of Contents

Revision History **22**
About This Document **28**
Audience 28
About This Manual 28
Related Documents 28
Documentation Conventions 29
1 Architectural Overview **31**
1.1 Product Features 31
1.2 Target Applications 38
1.3 High-Level Block Diagram 38
1.4 Functional Overview 40
1.4.1 ARM Cortex™-M3 40
1.4.2 Motor Control Peripherals 41
1.4.3 Analog Peripherals 41
1.4.4 Serial Communications Peripherals 41
1.4.5 System Peripherals 43
1.4.6 Memory Peripherals 44
1.4.7 Additional Features 44
1.4.8 Hardware Details 45
2 The Cortex-M3 Processor **46**
2.1 Block Diagram 47
2.2 Overview 48
2.2.1 System-Level Interface 48
2.2.2 Integrated Configurable Debug 48
2.2.3 Trace Port Interface Unit (TPIU) 49
2.2.4 Cortex-M3 System Component Details 49
2.3 Programming Model 50
2.3.1 Processor Mode and Privilege Levels for Software Execution 50
2.3.2 Stacks 50
2.3.3 Register Map 51
2.3.4 Register Descriptions 52
2.3.5 Exceptions and Interrupts 65
2.3.6 Data Types 65
2.4 Memory Model 65
2.4.1 Memory Regions, Types and Attributes 67
2.4.2 Memory System Ordering of Memory Accesses 67
2.4.3 Behavior of Memory Accesses 67
2.4.4 Software Ordering of Memory Accesses 68
2.4.5 Bit-Banding 69
2.4.6 Data Storage 71
2.4.7 Synchronization Primitives 72
2.5 Exception Model 73
2.5.1 Exception States 74
2.5.2 Exception Types 74
2.5.3 Exception Handlers 77

2.5.4 Vector Table ... 77
2.5.5 Exception Priorities ... 78
2.5.6 Interrupt Priority Grouping ... 79
2.5.7 Exception Entry and Return ... 79
2.6 Fault Handling ... 81
2.6.1 Fault Types ... 82
2.6.2 Fault Escalation and Hard Faults ... 82
2.6.3 Fault Status Registers and Fault Address Registers ... 83
2.6.4 Lockup ... 83
2.7 Power Management ... 83
2.7.1 Entering Sleep Modes ... 84
2.7.2 Wake Up from Sleep Mode ... 84
2.8 Instruction Set Summary ... 85

3 Cortex-M3 Peripherals ... 88
3.1 Functional Description ... 88
3.1.1 System Timer (SysTick) ... 88
3.1.2 Nested Vectored Interrupt Controller (NVIC) ... 89
3.1.3 System Control Block (SCB) ... 91
3.1.4 Memory Protection Unit (MPU) ... 91
3.2 Register Map ... 96
3.3 System Timer (SysTick) Register Descriptions ... 98
3.4 NVIC Register Descriptions ... 102
3.5 System Control Block (SCB) Register Descriptions ... 115
3.6 Memory Protection Unit (MPU) Register Descriptions ... 142

4 JTAG Interface ... 152
4.1 Block Diagram ... 153
4.2 Signal Description ... 153
4.3 Functional Description ... 154
4.3.1 JTAG Interface Pins ... 154
4.3.2 JTAG TAP Controller ... 156
4.3.3 Shift Registers ... 157
4.3.4 Operational Considerations ... 157
4.4 Initialization and Configuration ... 160
4.5 Register Descriptions ... 160
4.5.1 Instruction Register (IR) ... 160
4.5.2 Data Registers ... 162

5 System Control ... 165
5.1 Signal Description ... 165
5.2 Functional Description ... 165
5.2.1 Device Identification ... 166
5.2.2 Reset Control ... 166
5.2.3 Power Control ... 170
5.2.4 Clock Control ... 171
5.2.5 System Control ... 176
5.3 Initialization and Configuration ... 177
5.4 Register Map ... 177
5.5 Register Descriptions ... 179

6 Hibernation Module 231
6.1 Block Diagram 232
6.2 Signal Description 232
6.3 Functional Description 233
6.3.1 Register Access Timing 233
6.3.2 Clock Source 234
6.3.3 Battery Management 235
6.3.4 Real-Time Clock 235
6.3.5 Battery-Backed Memory 236
6.3.6 Power Control 236
6.3.7 Initiating Hibernate 236
6.3.8 Interrupts and Status 237
6.4 Initialization and Configuration 237
6.4.1 Initialization 237
6.4.2 RTC Match Functionality (No Hibernation) 237
6.4.3 RTC Match/Wake-Up from Hibernation 238
6.4.4 External Wake-Up from Hibernation 238
6.4.5 RTC/External Wake-Up from Hibernation 238
6.5 Register Map 238
6.6 Register Descriptions 239

7 Internal Memory 252
7.1 Block Diagram 252
7.2 Functional Description 252
7.2.1 SRAM Memory 252
7.2.2 Flash Memory 253
7.3 Flash Memory Initialization and Configuration 254
7.3.1 Flash Programming 254
7.3.2 Nonvolatile Register Programming 255
7.4 Register Map 256
7.5 Flash Register Descriptions (Flash Control Offset) 257
7.6 Flash Register Descriptions (System Control Offset) 265

8 General-Purpose Input/Outputs (GPIOs) 278
8.1 Signal Description 278
8.2 Functional Description 285
8.2.1 Data Control 286
8.2.2 Interrupt Control 287
8.2.3 Mode Control 288
8.2.4 Commit Control 288
8.2.5 Pad Control 288
8.2.6 Identification 288
8.3 Initialization and Configuration 288
8.4 Register Map 289
8.5 Register Descriptions 291

9 General-Purpose Timers 326
9.1 Block Diagram 326
9.2 Signal Description 327
9.3 Functional Description 328
9.3.1 GPTM Reset Conditions 328

9.3.2 32-Bit Timer Operating Modes 329
9.3.3 16-Bit Timer Operating Modes 330
9.4 Initialization and Configuration 334
9.4.1 32-Bit One-Shot/Periodic Timer Mode 334
9.4.2 32-Bit Real-Time Clock (RTC) Mode 335
9.4.3 16-Bit One-Shot/Periodic Timer Mode 335
9.4.4 16-Bit Input Edge Count Mode 336
9.4.5 16-Bit Input Edge Timing Mode 336
9.4.6 16-Bit PWM Mode 337
9.5 Register Map 337
9.6 Register Descriptions 338

10 Watchdog Timer 363
10.1 Block Diagram 364
10.2 Functional Description 364
10.3 Initialization and Configuration 365
10.4 Register Map 365
10.5 Register Descriptions 366

11 Universal Asynchronous Receivers/Transmitters (UARTs) 387
11.1 Block Diagram 388
11.2 Signal Description 388
11.3 Functional Description 389
11.3.1 Transmit/Receive Logic 389
11.3.2 Baud-Rate Generation 390
11.3.3 Data Transmission 390
11.3.4 Serial IR (SIR) 391
11.3.5 FIFO Operation 392
11.3.6 Interrupts 392
11.3.7 Loopback Operation 393
11.3.8 IrDA SIR block 394
11.4 Initialization and Configuration 394
11.5 Register Map 395
11.6 Register Descriptions 396

12 Synchronous Serial Interface (SSI) 430
12.1 Block Diagram 430
12.2 Signal Description 431
12.3 Functional Description 431
12.3.1 Bit Rate Generation 431
12.3.2 FIFO Operation 432
12.3.3 Interrupts 432
12.3.4 Frame Formats 433
12.4 Initialization and Configuration 440
12.5 Register Map 441
12.6 Register Descriptions 442

13 Inter-Integrated Circuit (I^2C) Interface 468
13.1 Block Diagram 469
13.2 Signal Description 469
13.3 Functional Description 470

13.3.1 I²C Bus Functional Overview ... 470
13.3.2 Available Speed Modes ... 472
13.3.3 Interrupts ... 473
13.3.4 Loopback Operation ... 474
13.3.5 Command Sequence Flow Charts ... 474
13.4 Initialization and Configuration ... 481
13.5 Register Map ... 482
13.6 Register Descriptions (I²C Master) ... 483
13.7 Register Descriptions (I²C Slave) ... 496

14 Controller Area Network (CAN) Module ... 505
14.1 Block Diagram ... 506
14.2 Signal Description ... 506
14.3 Functional Description ... 507
14.3.1 Initialization ... 508
14.3.2 Operation ... 508
14.3.3 Transmitting Message Objects ... 509
14.3.4 Configuring a Transmit Message Object ... 509
14.3.5 Updating a Transmit Message Object ... 511
14.3.6 Accepting Received Message Objects ... 511
14.3.7 Receiving a Data Frame ... 511
14.3.8 Receiving a Remote Frame ... 512
14.3.9 Receive/Transmit Priority ... 512
14.3.10 Configuring a Receive Message Object ... 513
14.3.11 Handling of Received Message Objects ... 514
14.3.12 Handling of Interrupts ... 517
14.3.13 Test Mode ... 517
14.3.14 Bit Timing Configuration Error Considerations ... 519
14.3.15 Bit Time and Bit Rate ... 519
14.3.16 Calculating the Bit Timing Parameters ... 521
14.4 Register Map ... 524
14.5 CAN Register Descriptions ... 526

15 Analog Comparators ... 552
15.1 Block Diagram ... 552
15.2 Signal Description ... 553
15.3 Functional Description ... 553
15.3.1 Internal Reference Programming ... 554
15.4 Initialization and Configuration ... 555
15.5 Register Map ... 555
15.6 Register Descriptions ... 556

16 Pin Diagram ... 564

17 Signal Tables ... 566
17.1 100-Pin LQFP Package Pin Tables ... 566
17.2 108-Ball BGA Package Pin Tables ... 579
17.3 Connections for Unused Signals ... 592

18 Operating Characteristics ... 593

19 Electrical Characteristics ... 594
19.1 DC Characteristics ... 594

19.1.1 Maximum Ratings 594
19.1.2 Recommended DC Operating Conditions 594
19.1.3 On-Chip Low Drop-Out (LDO) Regulator Characteristics 595
19.1.4 GPIO Module Characteristics 595
19.1.5 Power Specifications 595
19.1.6 Flash Memory Characteristics 597
19.1.7 Hibernation 597
19.2 AC Characteristics 597
19.2.1 Load Conditions 597
19.2.2 Clocks 598
19.2.3 JTAG and Boundary Scan 599
19.2.4 Reset 600
19.2.5 Sleep Modes 602
19.2.6 Hibernation Module 602
19.2.7 General-Purpose I/O (GPIO) 603
19.2.8 Synchronous Serial Interface (SSI) 603
19.2.9 Inter-Integrated Circuit (I^2C) Interface 605
19.2.10 Analog Comparator 606

A Serial Flash Loader 607
A.1 Serial Flash Loader 607
A.2 Interfaces 607
A.2.1 UART 607
A.2.2 SSI 607
A.3 Packet Handling 608
A.3.1 Packet Format 608
A.3.2 Sending Packets 608
A.3.3 Receiving Packets 608
A.4 Commands 609
A.4.1 COMMAND_PING (0X20) 609
A.4.2 COMMAND_GET_STATUS (0x23) 609
A.4.3 COMMAND_DOWNLOAD (0x21) 609
A.4.4 COMMAND_SEND_DATA (0x24) 610
A.4.5 COMMAND_RUN (0x22) 610
A.4.6 COMMAND_RESET (0x25) 610

B Register Quick Reference 612

C Ordering and Contact Information 632
C.1 Ordering Information 632
C.2 Part Markings 632
C.3 Kits 633
C.4 Support Information 633

D Package Information 634
D.1 100-Pin LQFP Package 634
D.1.1 Package Dimensions 634
D.1.2 Tray Dimensions 636
D.1.3 Tape and Reel Dimensions 636
D.2 108-Ball BGA Package 638
D.2.1 Package Dimensions 638

D.2.2 Tray Dimensions 640
D.2.3 Tape and Reel Dimensions 641

List of Figures

Figure 1-1. Stellaris LM3S2911 Microcontroller High-Level Block Diagram 39
Figure 2-1. CPU Block Diagram 48
Figure 2-2. TPIU Block Diagram 49
Figure 2-3. Cortex-M3 Register Set 51
Figure 2-4. Bit-Band Mapping 71
Figure 2-5. Data Storage 72
Figure 2-6. Vector Table 78
Figure 2-7. Exception Stack Frame 80
Figure 3-1. SRD Use Example 94
Figure 4-1. JTAG Module Block Diagram 153
Figure 4-2. Test Access Port State Machine 157
Figure 4-3. IDCODE Register Format 163
Figure 4-4. BYPASS Register Format 163
Figure 4-5. Boundary Scan Register Format 164
Figure 5-1. Basic $\overline{\text{RST}}$ Configuration 167
Figure 5-2. External Circuitry to Extend Power-On Reset 168
Figure 5-3. Reset Circuit Controlled by Switch 168
Figure 5-4. Power Architecture 170
Figure 5-5. Main Clock Tree 173
Figure 6-1. Hibernation Module Block Diagram 232
Figure 6-2. Clock Source Using Crystal 234
Figure 6-3. Clock Source Using Dedicated Oscillator 235
Figure 7-1. Flash Block Diagram 252
Figure 8-1. GPIO Port Block Diagram 286
Figure 8-2. GPIODATA Write Example 287
Figure 8-3. GPIODATA Read Example 287
Figure 9-1. GPTM Module Block Diagram 327
Figure 9-2. 16-Bit Input Edge Count Mode Example 332
Figure 9-3. 16-Bit Input Edge Time Mode Example 333
Figure 9-4. 16-Bit PWM Mode Example 334
Figure 10-1. WDT Module Block Diagram 364
Figure 11-1. UART Module Block Diagram 388
Figure 11-2. UART Character Frame 390
Figure 11-3. IrDA Data Modulation 392
Figure 12-1. SSI Module Block Diagram 430
Figure 12-2. TI Synchronous Serial Frame Format (Single Transfer) 433
Figure 12-3. TI Synchronous Serial Frame Format (Continuous Transfer) 434
Figure 12-4. Freescale SPI Format (Single Transfer) with SPO=0 and SPH=0 435
Figure 12-5. Freescale SPI Format (Continuous Transfer) with SPO=0 and SPH=0 435
Figure 12-6. Freescale SPI Frame Format with SPO=0 and SPH=1 436
Figure 12-7. Freescale SPI Frame Format (Single Transfer) with SPO=1 and SPH=0 437
Figure 12-8. Freescale SPI Frame Format (Continuous Transfer) with SPO=1 and SPH=0 437
Figure 12-9. Freescale SPI Frame Format with SPO=1 and SPH=1 438
Figure 12-10. MICROWIRE Frame Format (Single Frame) 439
Figure 12-11. MICROWIRE Frame Format (Continuous Transfer) 440
Figure 12-12. MICROWIRE Frame Format, SSIFss Input Setup and Hold Requirements 440

Figure 13-1. I^2C Block Diagram 469
Figure 13-2. I^2C Bus Configuration 470
Figure 13-3. START and STOP Conditions 470
Figure 13-4. Complete Data Transfer with a 7-Bit Address 471
Figure 13-5. R/S Bit in First Byte 471
Figure 13-6. Data Validity During Bit Transfer on the I^2C Bus 471
Figure 13-7. Master Single SEND 475
Figure 13-8. Master Single RECEIVE 476
Figure 13-9. Master Burst SEND 477
Figure 13-10. Master Burst RECEIVE 478
Figure 13-11. Master Burst RECEIVE after Burst SEND 479
Figure 13-12. Master Burst SEND after Burst RECEIVE 480
Figure 13-13. Slave Command Sequence 481
Figure 14-1. CAN Controller Block Diagram 506
Figure 14-2. CAN Data/Remote Frame 507
Figure 14-3. Message Objects in a FIFO Buffer 516
Figure 14-4. CAN Bit Time 520
Figure 15-1. Analog Comparator Module Block Diagram 552
Figure 15-2. Structure of Comparator Unit 554
Figure 15-3. Comparator Internal Reference Structure 554
Figure 16-1. 100-Pin LQFP Package Pin Diagram 564
Figure 16-2. 108-Ball BGA Package Pin Diagram (Top View) 565
Figure 19-1. Load Conditions 597
Figure 19-2. JTAG Test Clock Input Timing 600
Figure 19-3. JTAG Test Access Port (TAP) Timing 600
Figure 19-4. JTAG TRST Timing 600
Figure 19-5. External Reset Timing ($\overline{RST}$) 601
Figure 19-6. Power-On Reset Timing 601
Figure 19-7. Brown-Out Reset Timing 601
Figure 19-8. Software Reset Timing 602
Figure 19-9. Watchdog Reset Timing 602
Figure 19-10. Hibernation Module Timing 603
Figure 19-11. SSI Timing for TI Frame Format (FRF=01), Single Transfer Timing Measurement 604
Figure 19-12. SSI Timing for MICROWIRE Frame Format (FRF=10), Single Transfer 604
Figure 19-13. SSI Timing for SPI Frame Format (FRF=00), with SPH=1 605
Figure 19-14. I^2C Timing 606
Figure D-1. Stellaris LM3S2911 100-Pin LQFP Package Dimensions 634
Figure D-2. 100-Pin LQFP Tray Dimensions 636
Figure D-3. 100-Pin LQFP Tape and Reel Dimensions 637
Figure D-4. Stellaris LM3S2911 108-Ball BGA Package Dimensions 638
Figure D-5. 108-Ball BGA Tray Dimensions 640
Figure D-6. 108-Ball BGA Tape and Reel Dimensions 641

List of Tables

Table 1. Revision History ... 22
Table 2. Documentation Conventions ... 29
Table 2-1. Summary of Processor Mode, Privilege Level, and Stack Use ... 51
Table 2-2. Processor Register Map ... 52
Table 2-3. PSR Register Combinations ... 57
Table 2-4. Memory Map ... 65
Table 2-5. Memory Access Behavior ... 67
Table 2-6. SRAM Memory Bit-Banding Regions ... 69
Table 2-7. Peripheral Memory Bit-Banding Regions ... 70
Table 2-8. Exception Types ... 75
Table 2-9. Interrupts ... 76
Table 2-10. Exception Return Behavior ... 81
Table 2-11. Faults ... 82
Table 2-12. Fault Status and Fault Address Registers ... 83
Table 2-13. Cortex-M3 Instruction Summary ... 85
Table 3-1. Core Peripheral Register Regions ... 88
Table 3-2. Memory Attributes Summary ... 91
Table 3-3. TEX, S, C, and B Bit Field Encoding ... 94
Table 3-4. Cache Policy for Memory Attribute Encoding ... 95
Table 3-5. AP Bit Field Encoding ... 95
Table 3-6. Memory Region Attributes for Stellaris Microcontrollers ... 95
Table 3-7. Peripherals Register Map ... 96
Table 3-8. Interrupt Priority Levels ... 121
Table 3-9. Example SIZE Field Values ... 149
Table 4-1. JTAG_SWD_SWO Signals (100LQFP) ... 153
Table 4-2. JTAG_SWD_SWO Signals (108BGA) ... 154
Table 4-3. JTAG Port Pins Reset State ... 154
Table 4-4. JTAG Instruction Register Commands ... 160
Table 5-1. System Control & Clocks Signals (100LQFP) ... 165
Table 5-2. System Control & Clocks Signals (108BGA) ... 165
Table 5-3. Reset Sources ... 166
Table 5-4. Clock Source Options ... 171
Table 5-5. Possible System Clock Frequencies Using the SYSDIV Field ... 174
Table 5-6. Examples of Possible System Clock Frequencies Using the SYSDIV2 Field ... 174
Table 5-7. System Control Register Map ... 178
Table 5-8. RCC2 Fields that Override RCC fields ... 192
Table 6-1. Hibernate Signals (100LQFP) ... 232
Table 6-2. Hibernate Signals (108BGA) ... 233
Table 6-3. Hibernation Module Register Map ... 239
Table 7-1. Flash Protection Policy Combinations ... 253
Table 7-2. User-Programmable Flash Memory Resident Registers ... 256
Table 7-3. Flash Register Map ... 256
Table 8-1. GPIO Pins With Non-Zero Reset Values ... 279
Table 8-2. GPIO Pins and Alternate Functions (100LQFP) ... 279
Table 8-3. GPIO Pins and Alternate Functions (108BGA) ... 280
Table 8-4. GPIO Signals (100LQFP) ... 282

Table 8-5. GPIO Signals (108BGA) ... 283
Table 8-6. GPIO Pad Configuration Examples ... 289
Table 8-7. GPIO Interrupt Configuration Example ... 289
Table 8-8. GPIO Register Map ... 290
Table 9-1. Available CCP Pins ... 327
Table 9-2. General-Purpose Timers Signals (100LQFP) ... 328
Table 9-3. General-Purpose Timers Signals (108BGA) ... 328
Table 9-4. 16-Bit Timer With Prescaler Configurations ... 330
Table 9-5. Timers Register Map ... 337
Table 10-1. Watchdog Timer Register Map ... 365
Table 11-1. UART Signals (100LQFP) ... 388
Table 11-2. UART Signals (108BGA) ... 389
Table 11-3. UART Register Map ... 395
Table 12-1. SSI Signals (100LQFP) ... 431
Table 12-2. SSI Signals (108BGA) ... 431
Table 12-3. SSI Register Map ... 442
Table 13-1. I2C Signals (100LQFP) ... 469
Table 13-2. I2C Signals (108BGA) ... 469
Table 13-3. Examples of I^2C Master Timer Period versus Speed Mode ... 472
Table 13-4. Inter-Integrated Circuit (I^2C) Interface Register Map ... 482
Table 13-5. Write Field Decoding for I2CMCS[3:0] Field (Sheet 1 of 3) ... 487
Table 14-1. Controller Area Network Signals (100LQFP) ... 507
Table 14-2. Controller Area Network Signals (108BGA) ... 507
Table 14-3. CAN Protocol Ranges ... 520
Table 14-4. CANBIT Register Values ... 520
Table 14-5. CAN Register Map ... 524
Table 15-1. Analog Comparators Signals (100LQFP) ... 553
Table 15-2. Analog Comparators Signals (108BGA) ... 553
Table 15-3. Internal Reference Voltage and ACREFCTL Field Values ... 554
Table 15-4. Analog Comparators Register Map ... 556
Table 17-1. Signals by Pin Number ... 566
Table 17-2. Signals by Signal Name ... 570
Table 17-3. Signals by Function, Except for GPIO ... 574
Table 17-4. GPIO Pins and Alternate Functions ... 577
Table 17-5. Signals by Pin Number ... 579
Table 17-6. Signals by Signal Name ... 583
Table 17-7. Signals by Function, Except for GPIO ... 587
Table 17-8. GPIO Pins and Alternate Functions ... 590
Table 17-9. Connections for Unused Signals (100-pin LQFP) ... 592
Table 17-10. Connections for Unused Signals, 108-pin BGA ... 592
Table 18-1. Temperature Characteristics ... 593
Table 18-2. Thermal Characteristics ... 593
Table 18-3. ESD Absolute Maximum Ratings ... 593
Table 19-1. Maximum Ratings ... 594
Table 19-2. Recommended DC Operating Conditions ... 594
Table 19-3. LDO Regulator Characteristics ... 595
Table 19-4. GPIO Module DC Characteristics ... 595
Table 19-5. Detailed Power Specifications ... 596

Table 19-6. Flash Memory Characteristics 597
Table 19-7. Hibernation Module DC Characteristics 597
Table 19-8. Phase Locked Loop (PLL) Characteristics 598
Table 19-9. Actual PLL Frequency 598
Table 19-10. Clock Characteristics 598
Table 19-11. Crystal Characteristics 599
Table 19-12. JTAG Characteristics 599
Table 19-13. Reset Characteristics 600
Table 19-14. Sleep Modes AC Characteristics 602
Table 19-15. Hibernation Module AC Characteristics 602
Table 19-16. GPIO Characteristics 603
Table 19-17. SSI Characteristics 603
Table 19-18. I^2C Characteristics 605
Table 19-19. Analog Comparator Characteristics 606
Table 19-20. Analog Comparator Voltage Reference Characteristics 606
Table C-1. Part Ordering Information 632

List of Registers

The Cortex-M3 Processor 46
Register 1: Cortex General-Purpose Register 0 (R0) 53
Register 2: Cortex General-Purpose Register 1 (R1) 53
Register 3: Cortex General-Purpose Register 2 (R2) 53
Register 4: Cortex General-Purpose Register 3 (R3) 53
Register 5: Cortex General-Purpose Register 4 (R4) 53
Register 6: Cortex General-Purpose Register 5 (R5) 53
Register 7: Cortex General-Purpose Register 6 (R6) 53
Register 8: Cortex General-Purpose Register 7 (R7) 53
Register 9: Cortex General-Purpose Register 8 (R8) 53
Register 10: Cortex General-Purpose Register 9 (R9) 53
Register 11: Cortex General-Purpose Register 10 (R10) 53
Register 12: Cortex General-Purpose Register 11 (R11) 53
Register 13: Cortex General-Purpose Register 12 (R12) 53
Register 14: Stack Pointer (SP) 54
Register 15: Link Register (LR) 55
Register 16: Program Counter (PC) 56
Register 17: Program Status Register (PSR) 57
Register 18: Priority Mask Register (PRIMASK) 61
Register 19: Fault Mask Register (FAULTMASK) 62
Register 20: Base Priority Mask Register (BASEPRI) 63
Register 21: Control Register (CONTROL) 64

Cortex-M3 Peripherals 88
Register 1: SysTick Control and Status Register (STCTRL), offset 0x010 99
Register 2: SysTick Reload Value Register (STRELOAD), offset 0x014 101
Register 3: SysTick Current Value Register (STCURRENT), offset 0x018 102
Register 4: Interrupt 0-31 Set Enable (EN0), offset 0x100 103
Register 5: Interrupt 32-43 Set Enable (EN1), offset 0x104 104
Register 6: Interrupt 0-31 Clear Enable (DIS0), offset 0x180 105
Register 7: Interrupt 32-43 Clear Enable (DIS1), offset 0x184 106
Register 8: Interrupt 0-31 Set Pending (PEND0), offset 0x200 107
Register 9: Interrupt 32-43 Set Pending (PEND1), offset 0x204 108
Register 10: Interrupt 0-31 Clear Pending (UNPEND0), offset 0x280 109
Register 11: Interrupt 32-43 Clear Pending (UNPEND1), offset 0x284 110
Register 12: Interrupt 0-31 Active Bit (ACTIVE0), offset 0x300 111
Register 13: Interrupt 32-43 Active Bit (ACTIVE1), offset 0x304 112
Register 14: Interrupt 0-3 Priority (PRI0), offset 0x400 113
Register 15: Interrupt 4-7 Priority (PRI1), offset 0x404 113
Register 16: Interrupt 8-11 Priority (PRI2), offset 0x408 113
Register 17: Interrupt 12-15 Priority (PRI3), offset 0x40C 113
Register 18: Interrupt 16-19 Priority (PRI4), offset 0x410 113
Register 19: Interrupt 20-23 Priority (PRI5), offset 0x414 113
Register 20: Interrupt 24-27 Priority (PRI6), offset 0x418 113
Register 21: Interrupt 28-31 Priority (PRI7), offset 0x41C 113
Register 22: Interrupt 32-35 Priority (PRI8), offset 0x420 113

Register 23: Interrupt 36-39 Priority (PRI9), offset 0x424 ... 113
Register 24: Interrupt 40-43 Priority (PRI10), offset 0x428 ... 113
Register 25: Software Trigger Interrupt (SWTRIG), offset 0xF00 ... 115
Register 26: CPU ID Base (CPUID), offset 0xD00 ... 116
Register 27: Interrupt Control and State (INTCTRL), offset 0xD04 ... 117
Register 28: Vector Table Offset (VTABLE), offset 0xD08 ... 120
Register 29: Application Interrupt and Reset Control (APINT), offset 0xD0C ... 121
Register 30: System Control (SYSCTRL), offset 0xD10 ... 123
Register 31: Configuration and Control (CFGCTRL), offset 0xD14 ... 125
Register 32: System Handler Priority 1 (SYSPRI1), offset 0xD18 ... 127
Register 33: System Handler Priority 2 (SYSPRI2), offset 0xD1C ... 128
Register 34: System Handler Priority 3 (SYSPRI3), offset 0xD20 ... 129
Register 35: System Handler Control and State (SYSHNDCTRL), offset 0xD24 ... 130
Register 36: Configurable Fault Status (FAULTSTAT), offset 0xD28 ... 134
Register 37: Hard Fault Status (HFAULTSTAT), offset 0xD2C ... 140
Register 38: Memory Management Fault Address (MMADDR), offset 0xD34 ... 141
Register 39: Bus Fault Address (FAULTADDR), offset 0xD38 ... 142
Register 40: MPU Type (MPUTYPE), offset 0xD90 ... 143
Register 41: MPU Control (MPUCTRL), offset 0xD94 ... 144
Register 42: MPU Region Number (MPUNUMBER), offset 0xD98 ... 146
Register 43: MPU Region Base Address (MPUBASE), offset 0xD9C ... 147
Register 44: MPU Region Base Address Alias 1 (MPUBASE1), offset 0xDA4 ... 147
Register 45: MPU Region Base Address Alias 2 (MPUBASE2), offset 0xDAC ... 147
Register 46: MPU Region Base Address Alias 3 (MPUBASE3), offset 0xDB4 ... 147
Register 47: MPU Region Attribute and Size (MPUATTR), offset 0xDA0 ... 149
Register 48: MPU Region Attribute and Size Alias 1 (MPUATTR1), offset 0xDA8 ... 149
Register 49: MPU Region Attribute and Size Alias 2 (MPUATTR2), offset 0xDB0 ... 149
Register 50: MPU Region Attribute and Size Alias 3 (MPUATTR3), offset 0xDB8 ... 149

System Control ... 165

Register 1: Device Identification 0 (DID0), offset 0x000 ... 180
Register 2: Brown-Out Reset Control (PBORCTL), offset 0x030 ... 182
Register 3: LDO Power Control (LDOPCTL), offset 0x034 ... 183
Register 4: Raw Interrupt Status (RIS), offset 0x050 ... 184
Register 5: Interrupt Mask Control (IMC), offset 0x054 ... 185
Register 6: Masked Interrupt Status and Clear (MISC), offset 0x058 ... 186
Register 7: Reset Cause (RESC), offset 0x05C ... 187
Register 8: Run-Mode Clock Configuration (RCC), offset 0x060 ... 188
Register 9: XTAL to PLL Translation (PLLCFG), offset 0x064 ... 191
Register 10: Run-Mode Clock Configuration 2 (RCC2), offset 0x070 ... 192
Register 11: Deep Sleep Clock Configuration (DSLPCLKCFG), offset 0x144 ... 194
Register 12: Device Identification 1 (DID1), offset 0x004 ... 195
Register 13: Device Capabilities 0 (DC0), offset 0x008 ... 197
Register 14: Device Capabilities 1 (DC1), offset 0x010 ... 198
Register 15: Device Capabilities 2 (DC2), offset 0x014 ... 200
Register 16: Device Capabilities 3 (DC3), offset 0x018 ... 202
Register 17: Device Capabilities 4 (DC4), offset 0x01C ... 204
Register 18: Run Mode Clock Gating Control Register 0 (RCGC0), offset 0x100 ... 206
Register 19: Sleep Mode Clock Gating Control Register 0 (SCGC0), offset 0x110 ... 208

Register 20: Deep Sleep Mode Clock Gating Control Register 0 (DCGC0), offset 0x120 210
Register 21: Run Mode Clock Gating Control Register 1 (RCGC1), offset 0x104 212
Register 22: Sleep Mode Clock Gating Control Register 1 (SCGC1), offset 0x114 215
Register 23: Deep Sleep Mode Clock Gating Control Register 1 (DCGC1), offset 0x124 218
Register 24: Run Mode Clock Gating Control Register 2 (RCGC2), offset 0x108 221
Register 25: Sleep Mode Clock Gating Control Register 2 (SCGC2), offset 0x118 223
Register 26: Deep Sleep Mode Clock Gating Control Register 2 (DCGC2), offset 0x128 225
Register 27: Software Reset Control 0 (SRCR0), offset 0x040 227
Register 28: Software Reset Control 1 (SRCR1), offset 0x044 228
Register 29: Software Reset Control 2 (SRCR2), offset 0x048 230

Hibernation Module 231
Register 1: Hibernation RTC Counter (HIBRTCC), offset 0x000 240
Register 2: Hibernation RTC Match 0 (HIBRTCM0), offset 0x004 241
Register 3: Hibernation RTC Match 1 (HIBRTCM1), offset 0x008 242
Register 4: Hibernation RTC Load (HIBRTCLD), offset 0x00C 243
Register 5: Hibernation Control (HIBCTL), offset 0x010 244
Register 6: Hibernation Interrupt Mask (HIBIM), offset 0x014 246
Register 7: Hibernation Raw Interrupt Status (HIBRIS), offset 0x018 247
Register 8: Hibernation Masked Interrupt Status (HIBMIS), offset 0x01C 248
Register 9: Hibernation Interrupt Clear (HIBIC), offset 0x020 249
Register 10: Hibernation RTC Trim (HIBRTCT), offset 0x024 250
Register 11: Hibernation Data (HIBDATA), offset 0x030-0x12C 251

Internal Memory 252
Register 1: Flash Memory Address (FMA), offset 0x000 258
Register 2: Flash Memory Data (FMD), offset 0x004 259
Register 3: Flash Memory Control (FMC), offset 0x008 260
Register 4: Flash Controller Raw Interrupt Status (FCRIS), offset 0x00C 262
Register 5: Flash Controller Interrupt Mask (FCIM), offset 0x010 263
Register 6: Flash Controller Masked Interrupt Status and Clear (FCMISC), offset 0x014 264
Register 7: USec Reload (USECRL), offset 0x140 266
Register 8: Flash Memory Protection Read Enable 0 (FMPRE0), offset 0x130 and 0x200 267
Register 9: Flash Memory Protection Program Enable 0 (FMPPE0), offset 0x134 and 0x400 268
Register 10: User Debug (USER_DBG), offset 0x1D0 269
Register 11: User Register 0 (USER_REG0), offset 0x1E0 270
Register 12: User Register 1 (USER_REG1), offset 0x1E4 271
Register 13: Flash Memory Protection Read Enable 1 (FMPRE1), offset 0x204 272
Register 14: Flash Memory Protection Read Enable 2 (FMPRE2), offset 0x208 273
Register 15: Flash Memory Protection Read Enable 3 (FMPRE3), offset 0x20C 274
Register 16: Flash Memory Protection Program Enable 1 (FMPPE1), offset 0x404 275
Register 17: Flash Memory Protection Program Enable 2 (FMPPE2), offset 0x408 276
Register 18: Flash Memory Protection Program Enable 3 (FMPPE3), offset 0x40C 277

General-Purpose Input/Outputs (GPIOs) 278
Register 1: GPIO Data (GPIODATA), offset 0x000 292
Register 2: GPIO Direction (GPIODIR), offset 0x400 293
Register 3: GPIO Interrupt Sense (GPIOIS), offset 0x404 294
Register 4: GPIO Interrupt Both Edges (GPIOIBE), offset 0x408 295
Register 5: GPIO Interrupt Event (GPIOIEV), offset 0x40C 296
Register 6: GPIO Interrupt Mask (GPIOIM), offset 0x410 297

Register 7: GPIO Raw Interrupt Status (GPIORIS), offset 0x414 ... 298
Register 8: GPIO Masked Interrupt Status (GPIOMIS), offset 0x418 ... 299
Register 9: GPIO Interrupt Clear (GPIOICR), offset 0x41C ... 300
Register 10: GPIO Alternate Function Select (GPIOAFSEL), offset 0x420 ... 301
Register 11: GPIO 2-mA Drive Select (GPIODR2R), offset 0x500 ... 303
Register 12: GPIO 4-mA Drive Select (GPIODR4R), offset 0x504 ... 304
Register 13: GPIO 8-mA Drive Select (GPIODR8R), offset 0x508 ... 305
Register 14: GPIO Open Drain Select (GPIOODR), offset 0x50C ... 306
Register 15: GPIO Pull-Up Select (GPIOPUR), offset 0x510 ... 307
Register 16: GPIO Pull-Down Select (GPIOPDR), offset 0x514 ... 308
Register 17: GPIO Slew Rate Control Select (GPIOSLR), offset 0x518 ... 309
Register 18: GPIO Digital Enable (GPIODEN), offset 0x51C ... 310
Register 19: GPIO Lock (GPIOLOCK), offset 0x520 ... 311
Register 20: GPIO Commit (GPIOCR), offset 0x524 ... 312
Register 21: GPIO Peripheral Identification 4 (GPIOPeriphID4), offset 0xFD0 ... 314
Register 22: GPIO Peripheral Identification 5 (GPIOPeriphID5), offset 0xFD4 ... 315
Register 23: GPIO Peripheral Identification 6 (GPIOPeriphID6), offset 0xFD8 ... 316
Register 24: GPIO Peripheral Identification 7 (GPIOPeriphID7), offset 0xFDC ... 317
Register 25: GPIO Peripheral Identification 0 (GPIOPeriphID0), offset 0xFE0 ... 318
Register 26: GPIO Peripheral Identification 1 (GPIOPeriphID1), offset 0xFE4 ... 319
Register 27: GPIO Peripheral Identification 2 (GPIOPeriphID2), offset 0xFE8 ... 320
Register 28: GPIO Peripheral Identification 3 (GPIOPeriphID3), offset 0xFEC ... 321
Register 29: GPIO PrimeCell Identification 0 (GPIOPCellID0), offset 0xFF0 ... 322
Register 30: GPIO PrimeCell Identification 1 (GPIOPCellID1), offset 0xFF4 ... 323
Register 31: GPIO PrimeCell Identification 2 (GPIOPCellID2), offset 0xFF8 ... 324
Register 32: GPIO PrimeCell Identification 3 (GPIOPCellID3), offset 0xFFC ... 325

General-Purpose Timers ... 326
Register 1: GPTM Configuration (GPTMCFG), offset 0x000 ... 339
Register 2: GPTM TimerA Mode (GPTMTAMR), offset 0x004 ... 340
Register 3: GPTM TimerB Mode (GPTMTBMR), offset 0x008 ... 342
Register 4: GPTM Control (GPTMCTL), offset 0x00C ... 344
Register 5: GPTM Interrupt Mask (GPTMIMR), offset 0x018 ... 347
Register 6: GPTM Raw Interrupt Status (GPTMRIS), offset 0x01C ... 349
Register 7: GPTM Masked Interrupt Status (GPTMMIS), offset 0x020 ... 350
Register 8: GPTM Interrupt Clear (GPTMICR), offset 0x024 ... 351
Register 9: GPTM TimerA Interval Load (GPTMTAILR), offset 0x028 ... 353
Register 10: GPTM TimerB Interval Load (GPTMTBILR), offset 0x02C ... 354
Register 11: GPTM TimerA Match (GPTMTAMATCHR), offset 0x030 ... 355
Register 12: GPTM TimerB Match (GPTMTBMATCHR), offset 0x034 ... 356
Register 13: GPTM TimerA Prescale (GPTMTAPR), offset 0x038 ... 357
Register 14: GPTM TimerB Prescale (GPTMTBPR), offset 0x03C ... 358
Register 15: GPTM TimerA Prescale Match (GPTMTAPMR), offset 0x040 ... 359
Register 16: GPTM TimerB Prescale Match (GPTMTBPMR), offset 0x044 ... 360
Register 17: GPTM TimerA (GPTMTAR), offset 0x048 ... 361
Register 18: GPTM TimerB (GPTMTBR), offset 0x04C ... 362

Watchdog Timer ... 363
Register 1: Watchdog Load (WDTLOAD), offset 0x000 ... 367
Register 2: Watchdog Value (WDTVALUE), offset 0x004 ... 368

Register 3: Watchdog Control (WDTCTL), offset 0x008 ... 369
Register 4: Watchdog Interrupt Clear (WDTICR), offset 0x00C ... 370
Register 5: Watchdog Raw Interrupt Status (WDTRIS), offset 0x010 ... 371
Register 6: Watchdog Masked Interrupt Status (WDTMIS), offset 0x014 ... 372
Register 7: Watchdog Test (WDTTEST), offset 0x418 ... 373
Register 8: Watchdog Lock (WDTLOCK), offset 0xC00 ... 374
Register 9: Watchdog Peripheral Identification 4 (WDTPeriphID4), offset 0xFD0 ... 375
Register 10: Watchdog Peripheral Identification 5 (WDTPeriphID5), offset 0xFD4 ... 376
Register 11: Watchdog Peripheral Identification 6 (WDTPeriphID6), offset 0xFD8 ... 377
Register 12: Watchdog Peripheral Identification 7 (WDTPeriphID7), offset 0xFDC ... 378
Register 13: Watchdog Peripheral Identification 0 (WDTPeriphID0), offset 0xFE0 ... 379
Register 14: Watchdog Peripheral Identification 1 (WDTPeriphID1), offset 0xFE4 ... 380
Register 15: Watchdog Peripheral Identification 2 (WDTPeriphID2), offset 0xFE8 ... 381
Register 16: Watchdog Peripheral Identification 3 (WDTPeriphID3), offset 0xFEC ... 382
Register 17: Watchdog PrimeCell Identification 0 (WDTPCellID0), offset 0xFF0 ... 383
Register 18: Watchdog PrimeCell Identification 1 (WDTPCellID1), offset 0xFF4 ... 384
Register 19: Watchdog PrimeCell Identification 2 (WDTPCellID2), offset 0xFF8 ... 385
Register 20: Watchdog PrimeCell Identification 3 (WDTPCellID3), offset 0xFFC ... 386

Universal Asynchronous Receivers/Transmitters (UARTs) ... 387
Register 1: UART Data (UARTDR), offset 0x000 ... 397
Register 2: UART Receive Status/Error Clear (UARTRSR/UARTECR), offset 0x004 ... 399
Register 3: UART Flag (UARTFR), offset 0x018 ... 401
Register 4: UART IrDA Low-Power Register (UARTILPR), offset 0x020 ... 403
Register 5: UART Integer Baud-Rate Divisor (UARTIBRD), offset 0x024 ... 404
Register 6: UART Fractional Baud-Rate Divisor (UARTFBRD), offset 0x028 ... 405
Register 7: UART Line Control (UARTLCRH), offset 0x02C ... 406
Register 8: UART Control (UARTCTL), offset 0x030 ... 408
Register 9: UART Interrupt FIFO Level Select (UARTIFLS), offset 0x034 ... 410
Register 10: UART Interrupt Mask (UARTIM), offset 0x038 ... 412
Register 11: UART Raw Interrupt Status (UARTRIS), offset 0x03C ... 414
Register 12: UART Masked Interrupt Status (UARTMIS), offset 0x040 ... 415
Register 13: UART Interrupt Clear (UARTICR), offset 0x044 ... 416
Register 14: UART Peripheral Identification 4 (UARTPeriphID4), offset 0xFD0 ... 418
Register 15: UART Peripheral Identification 5 (UARTPeriphID5), offset 0xFD4 ... 419
Register 16: UART Peripheral Identification 6 (UARTPeriphID6), offset 0xFD8 ... 420
Register 17: UART Peripheral Identification 7 (UARTPeriphID7), offset 0xFDC ... 421
Register 18: UART Peripheral Identification 0 (UARTPeriphID0), offset 0xFE0 ... 422
Register 19: UART Peripheral Identification 1 (UARTPeriphID1), offset 0xFE4 ... 423
Register 20: UART Peripheral Identification 2 (UARTPeriphID2), offset 0xFE8 ... 424
Register 21: UART Peripheral Identification 3 (UARTPeriphID3), offset 0xFEC ... 425
Register 22: UART PrimeCell Identification 0 (UARTPCellID0), offset 0xFF0 ... 426
Register 23: UART PrimeCell Identification 1 (UARTPCellID1), offset 0xFF4 ... 427
Register 24: UART PrimeCell Identification 2 (UARTPCellID2), offset 0xFF8 ... 428
Register 25: UART PrimeCell Identification 3 (UARTPCellID3), offset 0xFFC ... 429

Synchronous Serial Interface (SSI) ... 430
Register 1: SSI Control 0 (SSICR0), offset 0x000 ... 443
Register 2: SSI Control 1 (SSICR1), offset 0x004 ... 445
Register 3: SSI Data (SSIDR), offset 0x008 ... 447

Register 4: SSI Status (SSISR), offset 0x00C ... 448
Register 5: SSI Clock Prescale (SSICPSR), offset 0x010 ... 450
Register 6: SSI Interrupt Mask (SSIIM), offset 0x014 ... 451
Register 7: SSI Raw Interrupt Status (SSIRIS), offset 0x018 ... 453
Register 8: SSI Masked Interrupt Status (SSIMIS), offset 0x01C ... 454
Register 9: SSI Interrupt Clear (SSIICR), offset 0x020 ... 455
Register 10: SSI Peripheral Identification 4 (SSIPeriphID4), offset 0xFD0 ... 456
Register 11: SSI Peripheral Identification 5 (SSIPeriphID5), offset 0xFD4 ... 457
Register 12: SSI Peripheral Identification 6 (SSIPeriphID6), offset 0xFD8 ... 458
Register 13: SSI Peripheral Identification 7 (SSIPeriphID7), offset 0xFDC ... 459
Register 14: SSI Peripheral Identification 0 (SSIPeriphID0), offset 0xFE0 ... 460
Register 15: SSI Peripheral Identification 1 (SSIPeriphID1), offset 0xFE4 ... 461
Register 16: SSI Peripheral Identification 2 (SSIPeriphID2), offset 0xFE8 ... 462
Register 17: SSI Peripheral Identification 3 (SSIPeriphID3), offset 0xFEC ... 463
Register 18: SSI PrimeCell Identification 0 (SSIPCellID0), offset 0xFF0 ... 464
Register 19: SSI PrimeCell Identification 1 (SSIPCellID1), offset 0xFF4 ... 465
Register 20: SSI PrimeCell Identification 2 (SSIPCellID2), offset 0xFF8 ... 466
Register 21: SSI PrimeCell Identification 3 (SSIPCellID3), offset 0xFFC ... 467

Inter-Integrated Circuit (I^2C) Interface ... 468
Register 1: I^2C Master Slave Address (I2CMSA), offset 0x000 ... 484
Register 2: I^2C Master Control/Status (I2CMCS), offset 0x004 ... 485
Register 3: I^2C Master Data (I2CMDR), offset 0x008 ... 489
Register 4: I^2C Master Timer Period (I2CMTPR), offset 0x00C ... 490
Register 5: I^2C Master Interrupt Mask (I2CMIMR), offset 0x010 ... 491
Register 6: I^2C Master Raw Interrupt Status (I2CMRIS), offset 0x014 ... 492
Register 7: I^2C Master Masked Interrupt Status (I2CMMIS), offset 0x018 ... 493
Register 8: I^2C Master Interrupt Clear (I2CMICR), offset 0x01C ... 494
Register 9: I^2C Master Configuration (I2CMCR), offset 0x020 ... 495
Register 10: I^2C Slave Own Address (I2CSOAR), offset 0x800 ... 497
Register 11: I^2C Slave Control/Status (I2CSCSR), offset 0x804 ... 498
Register 12: I^2C Slave Data (I2CSDR), offset 0x808 ... 500
Register 13: I^2C Slave Interrupt Mask (I2CSIMR), offset 0x80C ... 501
Register 14: I^2C Slave Raw Interrupt Status (I2CSRIS), offset 0x810 ... 502
Register 15: I^2C Slave Masked Interrupt Status (I2CSMIS), offset 0x814 ... 503
Register 16: I^2C Slave Interrupt Clear (I2CSICR), offset 0x818 ... 504

Controller Area Network (CAN) Module ... 505
Register 1: CAN Control (CANCTL), offset 0x000 ... 527
Register 2: CAN Status (CANSTS), offset 0x004 ... 529
Register 3: CAN Error Counter (CANERR), offset 0x008 ... 531
Register 4: CAN Bit Timing (CANBIT), offset 0x00C ... 532
Register 5: CAN Interrupt (CANINT), offset 0x010 ... 533
Register 6: CAN Test (CANTST), offset 0x014 ... 534
Register 7: CAN Baud Rate Prescaler Extension (CANBRPE), offset 0x018 ... 536
Register 8: CAN IF1 Command Request (CANIF1CRQ), offset 0x020 ... 537
Register 9: CAN IF2 Command Request (CANIF2CRQ), offset 0x080 ... 537
Register 10: CAN IF1 Command Mask (CANIF1CMSK), offset 0x024 ... 538
Register 11: CAN IF2 Command Mask (CANIF2CMSK), offset 0x084 ... 538

Register 12: CAN IF1 Mask 1 (CANIF1MSK1), offset 0x028 540
Register 13: CAN IF2 Mask 1 (CANIF2MSK1), offset 0x088 540
Register 14: CAN IF1 Mask 2 (CANIF1MSK2), offset 0x02C 541
Register 15: CAN IF2 Mask 2 (CANIF2MSK2), offset 0x08C 541
Register 16: CAN IF1 Arbitration 1 (CANIF1ARB1), offset 0x030 542
Register 17: CAN IF2 Arbitration 1 (CANIF2ARB1), offset 0x090 542
Register 18: CAN IF1 Arbitration 2 (CANIF1ARB2), offset 0x034 543
Register 19: CAN IF2 Arbitration 2 (CANIF2ARB2), offset 0x094 543
Register 20: CAN IF1 Message Control (CANIF1MCTL), offset 0x038 545
Register 21: CAN IF2 Message Control (CANIF2MCTL), offset 0x098 545
Register 22: CAN IF1 Data A1 (CANIF1DA1), offset 0x03C 547
Register 23: CAN IF1 Data A2 (CANIF1DA2), offset 0x040 547
Register 24: CAN IF1 Data B1 (CANIF1DB1), offset 0x044 547
Register 25: CAN IF1 Data B2 (CANIF1DB2), offset 0x048 547
Register 26: CAN IF2 Data A1 (CANIF2DA1), offset 0x09C 547
Register 27: CAN IF2 Data A2 (CANIF2DA2), offset 0x0A0 547
Register 28: CAN IF2 Data B1 (CANIF2DB1), offset 0x0A4 547
Register 29: CAN IF2 Data B2 (CANIF2DB2), offset 0x0A8 547
Register 30: CAN Transmission Request 1 (CANTXRQ1), offset 0x100 548
Register 31: CAN Transmission Request 2 (CANTXRQ2), offset 0x104 548
Register 32: CAN New Data 1 (CANNWDA1), offset 0x120 549
Register 33: CAN New Data 2 (CANNWDA2), offset 0x124 549
Register 34: CAN Message 1 Interrupt Pending (CANMSG1INT), offset 0x140 550
Register 35: CAN Message 2 Interrupt Pending (CANMSG2INT), offset 0x144 550
Register 36: CAN Message 1 Valid (CANMSG1VAL), offset 0x160 551
Register 37: CAN Message 2 Valid (CANMSG2VAL), offset 0x164 551

Analog Comparators 552

Register 1: Analog Comparator Masked Interrupt Status (ACMIS), offset 0x000 557
Register 2: Analog Comparator Raw Interrupt Status (ACRIS), offset 0x004 558
Register 3: Analog Comparator Interrupt Enable (ACINTEN), offset 0x008 559
Register 4: Analog Comparator Reference Voltage Control (ACREFCTL), offset 0x010 560
Register 5: Analog Comparator Status 0 (ACSTAT0), offset 0x020 561
Register 6: Analog Comparator Status 1 (ACSTAT1), offset 0x040 561
Register 7: Analog Comparator Control 0 (ACCTL0), offset 0x024 562
Register 8: Analog Comparator Control 1 (ACCTL1), offset 0x044 562

Revision History

The revision history table notes changes made between the indicated revisions of the LM3S2911 data sheet.

Table 1. Revision History

Date	Revision	Description
November 2011	11108	■ Added module-specific pin tables to each chapter in the new Signal Description sections. ■ In Hibernation chapter: – Changed terminology from non-volatile memory to battery-backed memory. – Clarified Hibernation module register reset conditions. ■ In Timer chapter, clarified that in 16-Bit Input Edge Time Mode, the timer is capable of capturing three types of events: rising edge, falling edge, or both. ■ In UART chapter, clarified interrupt behavior. ■ In SSI chapter, corrected SSIClk in the figure "Synchronous Serial Frame Format (Single Transfer)". ■ In Signal Tables chapter: – Corrected pin numbers in table "Connections for Unused Signals" (other pin tables were correct). ■ In Electrical Characteristics chapter: – Added parameter "Input voltage for a GPIO configured as an analog input" to the "Maximum Ratings" table. – Corrected Nom values for parameters "TCK clock Low time" and "TCK clock High time" in "JTAG Characteristics" table. ■ Additional minor data sheet clarifications and corrections.

Table 1. Revision History *(continued)*

Date	Revision	Description
January 2011	9102	■ In **Application Interrupt and Reset Control (APINT)** register, changed bit name from SYSRESETREQ to SYSRESREQ. ■ Added DEBUG (Debug Priority) bit field to **System Handler Priority 3 (SYSPRI3)** register. ■ Added "Reset Sources" table to System Control chapter. ■ Corrected GPIOAMSEL bit field in GPIO Analog Mode Select (**GPIOAMSEL**) register to be four-bits wide, bits[7:4]. ■ Removed mention of false-start bit detection in the UART chapter. This feature is not supported. ■ Added note that specific module clocks must be enabled before that module's registers can be programmed. There must be a delay of 3 system clocks after the module clock is enabled before any of that module's registers are accessed. ■ Changed I^2C slave register base addresses and offsets to be relative to the I^2C module base address of 0x4002.0000 and 0x4002.1000, so register bases and offsets were changed for all I^2C slave registers. Note that the hw_i2c.h file in the StellarisWare® Driver Library uses a base address of 0x4002.0800 and 0x4002.1800 for the I^2C slave registers. Be aware when using registers with offsets between 0x800 and 0x818 that StellarisWare uses the old slave base address for these offsets. ■ Added GNDPHY and VCCPHY to Connections for Unused Signals tables. ■ Added specification for maximum input voltage on a non-power pin when the microcontroller is unpowered (V_{NON} parameter in Maximum Ratings table). ■ Additional minor data sheet clarifications and corrections.
September 2010	7787	■ Reorganized ARM Cortex-M3 Processor Core, Memory Map and Interrupts chapters, creating two new chapters, The Cortex-M3 Processor and Cortex-M3 Peripherals. Much additional content was added, including all the Cortex-M3 registers. ■ Changed register names to be consistent with StellarisWare names: the Cortex-M3 **Interrupt Control and Status (ICSR)** register to the **Interrupt Control and State (INTCTRL)** register, and the Cortex-M3 **Interrupt Set Enable (SETNA)** register to the **Interrupt 0-31 Set Enable (EN0)** register. ■ Added clarification of instruction execution during Flash operations. ■ Modified Figure 8-1 on page 286 to clarify operation of the GPIO inputs when used as an alternate function. ■ Corrected GPIOAMSEL bit field in **GPIO Analog Mode Select (GPIOAMSEL)** register to be eight-bits wide, bits[7:0]. ■ Added caution not to apply a Low value to PB7 when debugging; a Low value on the pin causes the JTAG controller to be reset, resulting in a loss of JTAG communication. ■ In General-Purpose Timers chapter, clarified operation of the 32-bit RTC mode. ■ In Electrical Characteristics chapter: – Added I_{LKG} parameter (GPIO input leakage current) to Table 19-4 on page 595. – Corrected values for t_{CLKRF} parameter (SSIClk rise/fall time) in Table 19-17 on page 603. ■ Added dimensions for Tray and Tape and Reel shipping mediums.

Table 1. Revision History *(continued)*

Date	Revision	Description
June 2010	7393	■ Corrected base address for SRAM in architectural overview chapter. ■ Clarified system clock operation, adding content to “Clock Control” on page 171. ■ Clarified CAN bit timing examples. ■ In Signal Tables chapter, added table "Connections for Unused Signals." ■ In "Thermal Characteristics" table, corrected thermal resistance value from 34 to 32. ■ In "Reset Characteristics" table, corrected value for supply voltage (VDD) rise time. ■ Additional minor data sheet clarifications and corrections.
April 2010	7007	■ Added caution note to the **I^{2}C Master Timer Period (I2CMTPR)** register description and changed field width to 7 bits. ■ Removed erroneous text about restoring the Flash Protection registers. ■ Added note about $\overline{\text{RST}}$ signal routing. ■ Clarified the function of the `TnSTALL` bit in the **GPTMCTL** register. ■ Additional minor data sheet clarifications and corrections.
January 2010	6712	■ In "System Control" section, clarified Debug Access Port operation after Sleep modes. ■ Clarified wording on Flash memory access errors. ■ Added section on Flash interrupts. ■ Clarified operation of SSI transmit FIFO. ■ Made these changes to the Operating Characteristics chapter: – Added storage temperature ratings to "Temperature Characteristics" table – Added "ESD Absolute Maximum Ratings" table ■ Made these changes to the Electrical Characteristics chapter: – In "Flash Memory Characteristics" table, corrected Mass erase time – Added sleep and deep-sleep wake-up times ("Sleep Modes AC Characteristics" table) – In "Reset Characteristics" table, corrected units for supply voltage (VDD) rise time
October 2009	6462	■ Removed erroneous reference to the `WRC` bit in the Hibernation chapter. ■ Deleted reset value for 16-bit mode from **GPTMTAILR**, **GPTMTAMATCHR**, and **GPTMTAR** registers because the module resets in 32-bit mode. ■ Clarified CAN bit timing and corrected examples. ■ Made these changes to the Electrical Characteristics chapter: – Removed V_{SIH} and V_{SIL} parameters from Operating Conditions table. – Added table showing actual PLL frequency depending on input crystal. – Changed the name of the $t_{HIB_REG_WRITE}$ parameter to $t_{HIB_REG_ACCESS}$. – Changed SSI set up and hold times to be expressed in system clocks, not ns.

Table 1. Revision History *(continued)*

Date	Revision	Description
July 2009	5920	Corrected ordering numbers.
July 2009	5902	■ Clarified Power-on reset and RST pin operation; added new diagrams. ■ Corrected the reset value of the **Hibernation Data (HIBDATA)** and **Hibernation Control (HIBCTL)** registers. ■ Clarified explanation of nonvolatile register programming in Internal Memory chapter. ■ Added explanation of reset value to **FMPRE0/1/2/3**, **FMPPE0/1/2/3**, **USER_DBG**, and **USER_REG0/1** registers. ■ Changed buffer type for WAKE pin to TTL and HIB pin to OD. ■ In ADC characteristics table, changed Max value for GAIN parameter from ±1 to ±3 and added E_{IR} (Internal voltage reference error) parameter. ■ Additional minor data sheet clarifications and corrections.
April 2009	5367	■ Added JTAG/SWD clarification (see “Communication with JTAG/SWD” on page 159). ■ Added clarification that the PLL operates at 400 MHz, but is divided by two prior to the application of the output divisor. ■ Added "GPIO Module DC Characteristics" table (see Table 19-4 on page 595). ■ Additional minor data sheet clarifications and corrections.
January 2009	4660	■ Corrected bit type for RELOAD bit field in SysTick Reload Value register; changed to R/W. ■ Clarification added as to what happens when the SSI in slave mode is required to transmit but there is no data in the TX FIFO. ■ Corrected bit timing examples in CAN chapter. ■ Additional minor data sheet clarifications and corrections.
November 2008	4283	■ Revised High-Level Block Diagram. ■ Additional minor data sheet clarifications and corrections were made.
October 2008	4149	■ Corrected values for DSOSCSRC bit field in **Deep Sleep Clock Configuration (DSLPCLKCFG)** register. ■ The FMA value for the **FMPRE3** register was incorrect in the Flash Resident Registers table in the Internal Memory chapter. The correct value is 0x0000.0006. ■ In the CAN chapter, major improvements were made including a rewrite of the conceptual information and the addition of new figures to clarify how to use the Controller Area Network (CAN) module. ■ Incorrect Comparator Operating Modes tables were removed from the Analog Comparators chapter.
August 2008	3447	■ Added note on clearing interrupts to Interrupts chapter. ■ Added Power Architecture diagram to System Control chapter. ■ Additional minor data sheet clarifications and corrections.
July 2008	3108	■ Additional minor data sheet clarifications and corrections.

Table 1. Revision History *(continued)*

Date	Revision	Description
May 2008	2972	■ As noted in the PCN, the option to provide VDD25 power from external sources was removed. Use the LDO output as the source of VDD25 input. ■ Additional minor data sheet clarifications and corrections.
April 2008	2881	■ The Θ_{JA} value was changed from 55.3 to 34 in the "Thermal Characteristics" table in the Operating Characteristics chapter. ■ Bit 31 of the **DC3** register was incorrectly described in prior versions of the data sheet. A reset of 1 indicates that an even CCP pin is present and can be used as a 32-KHz input clock. ■ Values for $I_{DD_HIBERNATE}$ were added to the "Detailed Power Specifications" table in the "Electrical Characteristics" chapter. ■ The "Hibernation Module DC Electricals" table was added to the "Electrical Characteristics" chapter. ■ The $T_{VDDRISE}$ parameter in the "Reset Characteristics" table in the "Electrical Characteristics" chapter was changed from a max of 100 to 250. ■ The maximum value on Core supply voltage (V_{DD25}) in the "Maximum Ratings" table in the "Electrical Characteristics" chapter was changed from 4 to 3. ■ The operational frequency of the internal 30-kHz oscillator clock source is 30 kHz ± 50% (prior data sheets incorrectly noted it as 30 kHz ± 30%). ■ A value of 0x3 in bits 5:4 of the **MISC** register (OSCSRC) indicates the 30-KHz internal oscillator is the input source for the oscillator. Prior data sheets incorrectly noted 0x3 as a reserved value. ■ The reset for bits 6:4 of the **RCC2** register (OSCSRC2) is 0x1 (IOSC). Prior data sheets incorrectly noted the reset was 0x0 (MOSC). ■ Two figures on clock source were added to the "Hibernation Module": – Clock Source Using Crystal – Clock Source Using Dedicated Oscillator ■ The following notes on battery management were added to the "Hibernation Module" chapter: – Battery voltage is not measured while in Hibernate mode. – System level factors may affect the accuracy of the low battery detect circuit. The designer should consider battery type, discharge characteristics, and a test load during battery voltage measurements. ■ A note on high-current applications was added to the GPIO chapter: For special high-current applications, the GPIO output buffers may be used with the following restrictions. With the GPIO pins configured as 8-mA output drivers, a total of four GPIO outputs may be used to sink current loads up to 18 mA each. At 18-mA sink current loading, the VOL value is specified as 1.2 V. The high-current GPIO package pins must be selected such that there are only a maximum of two per side of the physical package or BGA pin group with the total number of high-current GPIO outputs not exceeding four for the entire package. ■ A note on Schmitt inputs was added to the GPIO chapter: Pins configured as digital inputs are Schmitt-triggered. ■ The Buffer type on the WAKE pin changed from OD to - in the Signal Tables. ■ The "Differential Sampling Range" figures in the ADC chapter were clarified. ■ The last revision of the data sheet (revision 2550) introduced two errors that have now been corrected:

Table 1. Revision History *(continued)*

Date	Revision	Description
		– The LQFP pin diagrams and pin tables were missing the comparator positive and negative input pins. – The base address was listed incorrectly in the **FMPRE0** and **FMPPE0** register bit diagrams. ■ Additional minor data sheet clarifications and corrections.
March 2008	2550	Started tracking revision history.

About This Document

This data sheet provides reference information for the LM3S2911 microcontroller, describing the functional blocks of the system-on-chip (SoC) device designed around the ARM® Cortex™-M3 core.

Audience

This manual is intended for system software developers, hardware designers, and application developers.

About This Manual

This document is organized into sections that correspond to each major feature.

Related Documents

The following related documents are available on the Stellaris® web site at www.ti.com/stellaris:

- *Stellaris® Errata*
- *ARM® Cortex™-M3 Errata*
- *Cortex™-M3/M4 Instruction Set Technical User's Manual*
- *Stellaris® Graphics Library User's Guide*
- *Stellaris® Peripheral Driver Library User's Guide*

The following related documents are also referenced:

- *ARM® Debug Interface V5 Architecture Specification*
- *ARM® Embedded Trace Macrocell Architecture Specification*
- *IEEE Standard 1149.1-Test Access Port and Boundary-Scan Architecture*

This documentation list was current as of publication date. Please check the web site for additional documentation, including application notes and white papers.

Documentation Conventions

This document uses the conventions shown in Table 2 on page 29.

Table 2. Documentation Conventions

Notation	Meaning
General Register Notation	
REGISTER	APB registers are indicated in uppercase bold. For example, **PBORCTL** is the Power-On and Brown-Out Reset Control register. If a register name contains a lowercase n, it represents more than one register. For example, **SRCRn** represents any (or all) of the three Software Reset Control registers: **SRCR0, SRCR1** , and **SRCR2**.
bit	A single bit in a register.
bit field	Two or more consecutive and related bits.
offset 0x*nnn*	A hexadecimal increment to a register's address, relative to that module's base address as specified in Table 2-4 on page 65.
Register *N*	Registers are numbered consecutively throughout the document to aid in referencing them. The register number has no meaning to software.
reserved	Register bits marked *reserved* are reserved for future use. In most cases, reserved bits are set to 0; however, user software should not rely on the value of a reserved bit. To provide software compatibility with future products, the value of a reserved bit should be preserved across a read-modify-write operation.
yy:xx	The range of register bits inclusive from xx to yy. For example, 31:15 means bits 15 through 31 in that register.
Register Bit/Field Types	This value in the register bit diagram indicates whether software running on the controller can change the value of the bit field.
RC	Software can read this field. The bit or field is cleared by hardware after reading the bit/field.
RO	Software can read this field. Always write the chip reset value.
R/W	Software can read or write this field.
R/WC	Software can read or write this field. Writing to it with any value clears the register.
R/W1C	Software can read or write this field. A write of a 0 to a W1C bit does not affect the bit value in the register. A write of a 1 clears the value of the bit in the register; the remaining bits remain unchanged. This register type is primarily used for clearing interrupt status bits where the read operation provides the interrupt status and the write of the read value clears only the interrupts being reported at the time the register was read.
R/W1S	Software can read or write a 1 to this field. A write of a 0 to a R/W1S bit does not affect the bit value in the register.
W1C	Software can write this field. A write of a 0 to a W1C bit does not affect the bit value in the register. A write of a 1 clears the value of the bit in the register; the remaining bits remain unchanged. A read of the register returns no meaningful data. This register is typically used to clear the corresponding bit in an interrupt register.
WO	Only a write by software is valid; a read of the register returns no meaningful data.
Register Bit/Field Reset Value	This value in the register bit diagram shows the bit/field value after any reset, unless noted.
0	Bit cleared to 0 on chip reset.
1	Bit set to 1 on chip reset.
-	Nondeterministic.
Pin/Signal Notation	
[ ]	Pin alternate function; a pin defaults to the signal without the brackets.
pin	Refers to the physical connection on the package.
signal	Refers to the electrical signal encoding of a pin.

Table 2. Documentation Conventions *(continued)*

Notation	Meaning
assert a signal	Change the value of the signal from the logically False state to the logically True state. For active High signals, the asserted signal value is 1 (High); for active Low signals, the asserted signal value is 0 (Low). The active polarity (High or Low) is defined by the signal name (see `SIGNAL` and $\overline{\texttt{SIGNAL}}$ below).
deassert a signal	Change the value of the signal from the logically True state to the logically False state.
$\overline{\texttt{SIGNAL}}$	Signal names are in uppercase and in the Courier font. An overbar on a signal name indicates that it is active Low. To assert $\overline{\texttt{SIGNAL}}$ is to drive it Low; to deassert $\overline{\texttt{SIGNAL}}$ is to drive it High.
`SIGNAL`	Signal names are in uppercase and in the Courier font. An active High signal has no overbar. To assert `SIGNAL` is to drive it High; to deassert `SIGNAL` is to drive it Low.
Numbers	
X	An uppercase X indicates any of several values is allowed, where X can be any legal pattern. For example, a binary value of 0X00 can be either 0100 or 0000, a hex value of 0xX is 0x0 or 0x1, and so on.
0x	Hexadecimal numbers have a prefix of 0x. For example, 0x00FF is the hexadecimal number FF. All other numbers within register tables are assumed to be binary. Within conceptual information, binary numbers are indicated with a b suffix, for example, 1011b, and decimal numbers are written without a prefix or suffix.

1 Architectural Overview

The Stellaris® family of microcontrollers—the first ARM® Cortex™-M3 based controllers—brings high-performance 32-bit computing to cost-sensitive embedded microcontroller applications. These pioneering parts deliver customers 32-bit performance at a cost equivalent to legacy 8- and 16-bit devices, all in a package with a small footprint.

The Stellaris family offers efficient performance and extensive integration, favorably positioning the device into cost-conscious applications requiring significant control-processing and connectivity capabilities. The Stellaris LM3S2000 series, designed for Controller Area Network (CAN) applications, extends the Stellaris family with Bosch CAN networking technology, the golden standard in short-haul industrial networks. The Stellaris LM3S2000 series also marks the first integration of CAN capabilities with the revolutionary Cortex-M3 core.

The LM3S2911 microcontroller is targeted for industrial applications, including remote monitoring, electronic point-of-sale machines, test and measurement equipment, network appliances and switches, factory automation, HVAC and building control, gaming equipment, motion control, medical instrumentation, and fire and security.

For applications requiring extreme conservation of power, the LM3S2911 microcontroller features a battery-backed Hibernation module to efficiently power down the LM3S2911 to a low-power state during extended periods of inactivity. With a power-up/power-down sequencer, a continuous time counter (RTC), a pair of match registers, an APB interface to the system bus, and dedicated non-volatile memory, the Hibernation module positions the LM3S2911 microcontroller perfectly for battery applications.

In addition, the LM3S2911 microcontroller offers the advantages of ARM's widely available development tools, System-on-Chip (SoC) infrastructure IP applications, and a large user community. Additionally, the microcontroller uses ARM's Thumb®-compatible Thumb-2 instruction set to reduce memory requirements and, thereby, cost. Finally, the LM3S2911 microcontroller is code-compatible to all members of the extensive Stellaris family; providing flexibility to fit our customers' precise needs.

Texas Instruments offers a complete solution to get to market quickly, with evaluation and development boards, white papers and application notes, an easy-to-use peripheral driver library, and a strong support, sales, and distributor network. See “Ordering and Contact Information” on page 632 for ordering information for Stellaris family devices.

1.1 Product Features

The LM3S2911 microcontroller includes the following product features:

- 32-Bit RISC Performance
  - 32-bit ARM® Cortex™-M3 v7M architecture optimized for small-footprint embedded applications
  - System timer (SysTick), providing a simple, 24-bit clear-on-write, decrementing, wrap-on-zero counter with a flexible control mechanism
  - Thumb®-compatible Thumb-2-only instruction set processor core for high code density
  - 50-MHz operation
  - Hardware-division and single-cycle-multiplication

- Integrated Nested Vectored Interrupt Controller (NVIC) providing deterministic interrupt handling
- 30 interrupts with eight priority levels
- Memory protection unit (MPU), providing a privileged mode for protected operating system functionality
- Unaligned data access, enabling data to be efficiently packed into memory
- Atomic bit manipulation (bit-banding), delivering maximum memory utilization and streamlined peripheral control

■ ARM® Cortex™-M3 Processor Core

- Compact core.
- Thumb-2 instruction set, delivering the high-performance expected of an ARM core in the memory size usually associated with 8- and 16-bit devices; typically in the range of a few kilobytes of memory for microcontroller class applications.
- Rapid application execution through Harvard architecture characterized by separate buses for instruction and data.
- Exceptional interrupt handling, by implementing the register manipulations required for handling an interrupt in hardware.
- Deterministic, fast interrupt processing: always 12 cycles, or just 6 cycles with tail-chaining
- Memory protection unit (MPU) to provide a privileged mode of operation for complex applications.
- Migration from the ARM7™ processor family for better performance and power efficiency.
- Full-featured debug solution
  - Serial Wire JTAG Debug Port (SWJ-DP)
  - Flash Patch and Breakpoint (FPB) unit for implementing breakpoints
  - Data Watchpoint and Trigger (DWT) unit for implementing watchpoints, trigger resources, and system profiling
  - Instrumentation Trace Macrocell (ITM) for support of printf style debugging
  - Trace Port Interface Unit (TPIU) for bridging to a Trace Port Analyzer
- Optimized for single-cycle flash usage
- Three sleep modes with clock gating for low power
- Single-cycle multiply instruction and hardware divide
- Atomic operations
- ARM Thumb2 mixed 16-/32-bit instruction set

  - 1.25 DMIPS/MHz
- JTAG
  - IEEE 1149.1-1990 compatible Test Access Port (TAP) controller
  - Four-bit Instruction Register (IR) chain for storing JTAG instructions
  - IEEE standard instructions: BYPASS, IDCODE, SAMPLE/PRELOAD, EXTEST and INTEST
  - ARM additional instructions: APACC, DPACC and ABORT
  - Integrated ARM Serial Wire Debug (SWD)
- Hibernation
  - System power control using discrete external regulator
  - Dedicated pin for waking from an external signal
  - Low-battery detection, signaling, and interrupt generation
  - 32-bit real-time clock (RTC)
  - Two 32-bit RTC match registers for timed wake-up and interrupt generation
  - Clock source from a 32.768-kHz external oscillator or a 4.194304-MHz crystal
  - RTC predivider trim for making fine adjustments to the clock rate
  - 64 32-bit words of non-volatile memory
  - Programmable interrupts for RTC match, external wake, and low battery events
- Internal Memory
  - 256 KB single-cycle flash
    - User-managed flash block protection on a 2-KB block basis
    - User-managed flash data programming
    - User-defined and managed flash-protection block
  - 64 KB single-cycle SRAM
- GPIOs
  - 21-60 GPIOs, depending on configuration
  - 5-V-tolerant in input configuration
  - Fast toggle capable of a change every two clock cycles
  - Programmable control for GPIO interrupts
    - Interrupt generation masking

    - Edge-triggered on rising, falling, or both
    - Level-sensitive on High or Low values
  - Bit masking in both read and write operations through address lines
  - Pins configured as digital inputs are Schmitt-triggered.
  - Programmable control for GPIO pad configuration
    - Weak pull-up or pull-down resistors
    - 2-mA, 4-mA, and 8-mA pad drive for digital communication; up to four pads can be configured with an 18-mA pad drive for high-current applications
    - Slew rate control for the 8-mA drive
    - Open drain enables
    - Digital input enables
- General-Purpose Timers
  - Four General-Purpose Timer Modules (GPTM), each of which provides two 16-bit timers/counters. Each GPTM can be configured to operate independently:
    - As a single 32-bit timer
    - As one 32-bit Real-Time Clock (RTC) to event capture
    - For Pulse Width Modulation (PWM)
  - 32-bit Timer modes
    - Programmable one-shot timer
    - Programmable periodic timer
    - Real-Time Clock when using an external 32.768-KHz clock as the input
    - User-enabled stalling when the controller asserts CPU Halt flag during debug
  - 16-bit Timer modes
    - General-purpose timer function with an 8-bit prescaler (for one-shot and periodic modes only)
    - Programmable one-shot timer
    - Programmable periodic timer
    - User-enabled stalling when the controller asserts CPU Halt flag during debug
  - 16-bit Input Capture modes
    - Input edge count capture

    - Input edge time capture
  - 16-bit PWM mode
    - Simple PWM mode with software-programmable output inversion of the PWM signal
- ARM FiRM-compliant Watchdog Timer
  - 32-bit down counter with a programmable load register
  - Separate watchdog clock with an enable
  - Programmable interrupt generation logic with interrupt masking
  - Lock register protection from runaway software
  - Reset generation logic with an enable/disable
  - User-enabled stalling when the controller asserts the CPU Halt flag during debug
- UART
  - Three fully programmable 16C550-type UARTs with IrDA support
  - Separate 16x8 transmit (TX) and receive (RX) FIFOs to reduce CPU interrupt service loading
  - Programmable baud-rate generator allowing speeds up to 3.125 Mbps
  - Programmable FIFO length, including 1-byte deep operation providing conventional double-buffered interface
  - FIFO trigger levels of 1/8, 1/4, 1/2, 3/4, and 7/8
  - Standard asynchronous communication bits for start, stop, and parity
  - Line-break generation and detection
  - Fully programmable serial interface characteristics
    - 5, 6, 7, or 8 data bits
    - Even, odd, stick, or no-parity bit generation/detection
    - 1 or 2 stop bit generation
  - IrDA serial-IR (SIR) encoder/decoder providing
    - Programmable use of IrDA Serial Infrared (SIR) or UART input/output
    - Support of IrDA SIR encoder/decoder functions for data rates up to 115.2 Kbps half-duplex
    - Support of normal 3/16 and low-power (1.41-2.23 µs) bit durations
    - Programmable internal clock generator enabling division of reference clock by 1 to 256 for low-power mode bit duration
- Synchronous Serial Interface (SSI)

- Two SSI modules, each with the following features:
- Master or slave operation
- Programmable clock bit rate and prescale
- Separate transmit and receive FIFOs, 16 bits wide, 8 locations deep
- Programmable interface operation for Freescale SPI, MICROWIRE, or Texas Instruments synchronous serial interfaces
- Programmable data frame size from 4 to 16 bits
- Internal loopback test mode for diagnostic/debug testing

■ I^2C

- Two I^2C modules, each with the following features:
- Devices on the I^2C bus can be designated as either a master or a slave
  - Supports both sending and receiving data as either a master or a slave
  - Supports simultaneous master and slave operation
- Four I^2C modes
  - Master transmit
  - Master receive
  - Slave transmit
  - Slave receive
- Two transmission speeds: Standard (100 Kbps) and Fast (400 Kbps)
- Master and slave interrupt generation
  - Master generates interrupts when a transmit or receive operation completes (or aborts due to an error)
  - Slave generates interrupts when data has been sent or requested by a master
- Master with arbitration and clock synchronization, multimaster support, and 7-bit addressing mode

■ Controller Area Network (CAN)

- CAN protocol version 2.0 part A/B
- Bit rates up to 1 Mbps
- 32 message objects with individual identifier masks
- Maskable interrupt

  - Disable Automatic Retransmission mode for Time-Triggered CAN (TTCAN) applications
  - Programmable Loopback mode for self-test operation
  - Programmable FIFO mode enables storage of multiple message objects
  - Gluelessly attaches to an external CAN interface through the `CANnTX` and `CANnRX` signals
- Analog Comparators
  - Two independent integrated analog comparators
  - Configurable for output to drive an output pin or generate an interrupt
  - Compare external pin input to external pin input or to internal programmable voltage reference
  - Compare a test voltage against any one of these voltages
    - An individual external reference voltage
    - A shared single external reference voltage
    - A shared internal reference voltage
- Power
  - On-chip Low Drop-Out (LDO) voltage regulator, with programmable output user-adjustable from 2.25 V to 2.75 V
  - Hibernation module handles the power-up/down 3.3 V sequencing and control for the core digital logic and analog circuits
  - Low-power options on controller: Sleep and Deep-sleep modes
  - Low-power options for peripherals: software controls shutdown of individual peripherals
  - 3.3-V supply brown-out detection and reporting via interrupt or reset
- Flexible Reset Sources
  - Power-on reset (POR)
  - Reset pin assertion
  - Brown-out (BOR) detector alerts to system power drops
  - Software reset
  - Watchdog timer reset
  - Internal low drop-out (LDO) regulator output goes unregulated
- Industrial and extended temperature 100-pin RoHS-compliant LQFP package
- Industrial-range 108-ball RoHS-compliant BGA package

1.2 Target Applications

- Remote monitoring
- Electronic point-of-sale (POS) machines
- Test and measurement equipment
- Network appliances and switches
- Factory automation
- HVAC and building control
- Gaming equipment
- Motion control
- Medical instrumentation
- Fire and security
- Power and energy
- Transportation

1.3 High-Level Block Diagram

Figure 1-1 on page 39 depicts the features on the Stellaris LM3S2911 microcontroller.

Figure 1-1. Stellaris LM3S2911 Microcontroller High-Level Block Diagram

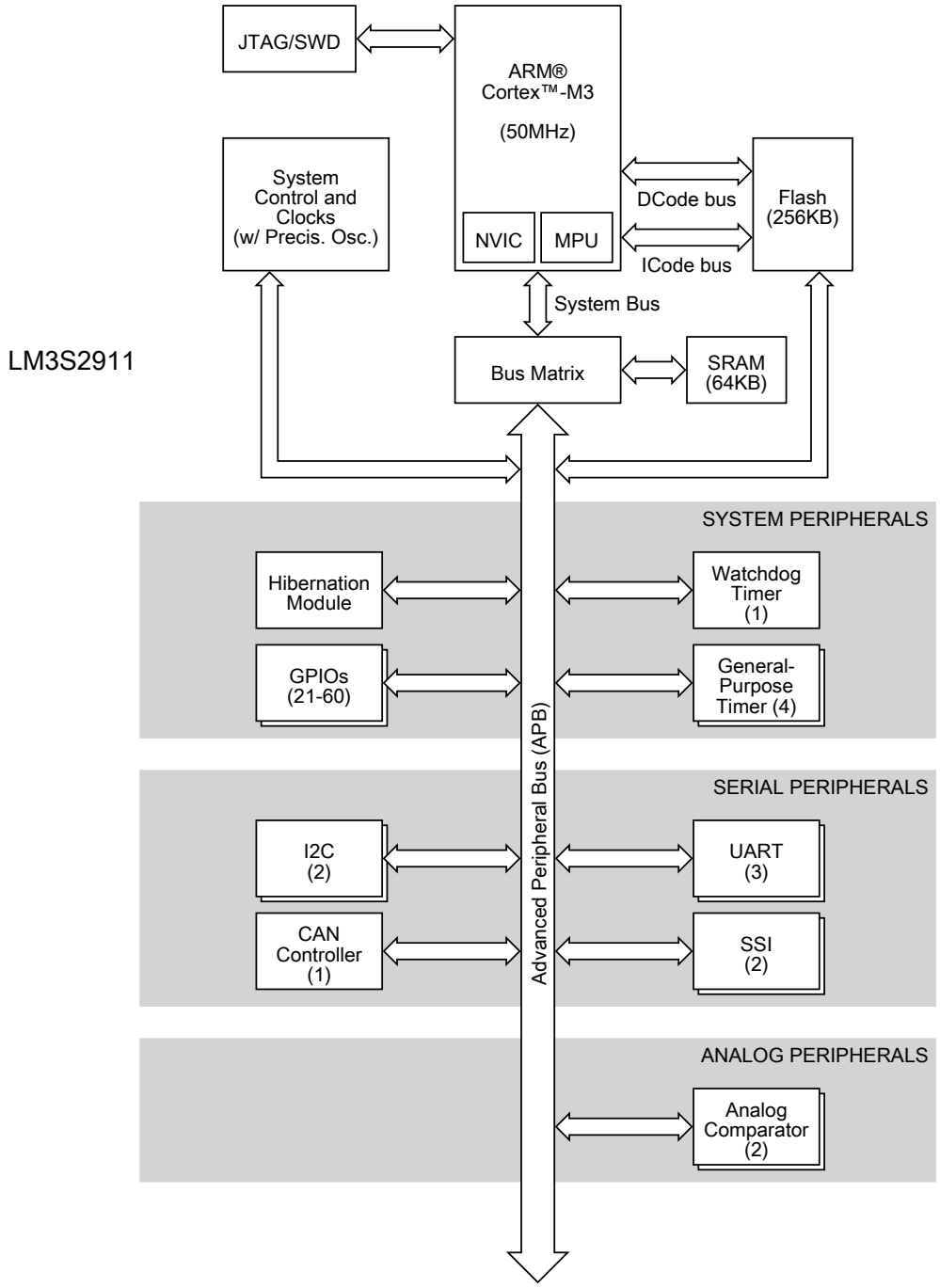

1.4 Functional Overview

The following sections provide an overview of the features of the LM3S2911 microcontroller. The page number in parenthesis indicates where that feature is discussed in detail. Ordering and support information can be found in “Ordering and Contact Information” on page 632.

1.4.1 ARM Cortex™-M3

1.4.1.1 Processor Core (see page 46)

All members of the Stellaris product family, including the LM3S2911 microcontroller, are designed around an ARM Cortex™-M3 processor core. The ARM Cortex-M3 processor provides the core for a high-performance, low-cost platform that meets the needs of minimal memory implementation, reduced pin count, and low-power consumption, while delivering outstanding computational performance and exceptional system response to interrupts.

1.4.1.2 Memory Map (see page 65)

A memory map lists the location of instructions and data in memory. The memory map for the LM3S2911 controller can be found in Table 2-4 on page 65. Register addresses are given as a hexadecimal increment, relative to the module's base address as shown in the memory map.

1.4.1.3 System Timer (SysTick) (see page 88)

Cortex-M3 includes an integrated system timer, SysTick. SysTick provides a simple, 24-bit clear-on-write, decrementing, wrap-on-zero counter with a flexible control mechanism. The counter can be used in several different ways, for example:

- An RTOS tick timer which fires at a programmable rate (for example, 100 Hz) and invokes a SysTick routine.
- A high-speed alarm timer using the system clock.
- A variable rate alarm or signal timer—the duration is range-dependent on the reference clock used and the dynamic range of the counter.
- A simple counter. Software can use this to measure time to completion and time used.
- An internal clock source control based on missing/meeting durations. The COUNTFLAG bit-field in the control and status register can be used to determine if an action completed within a set duration, as part of a dynamic clock management control loop.

1.4.1.4 Nested Vectored Interrupt Controller (NVIC) (see page 89)

The LM3S2911 controller includes the ARM Nested Vectored Interrupt Controller (NVIC) on the ARM® Cortex™-M3 core. The NVIC and Cortex-M3 prioritize and handle all exceptions. All exceptions are handled in Handler Mode. The processor state is automatically stored to the stack on an exception, and automatically restored from the stack at the end of the Interrupt Service Routine (ISR). The vector is fetched in parallel to the state saving, which enables efficient interrupt entry. The processor supports tail-chaining, which enables back-to-back interrupts to be performed without the overhead of state saving and restoration. Software can set eight priority levels on 7 exceptions (system handlers) and 30 interrupts.

1.4.1.5 System Control Block (SCB) (see page 91)

The SCB provides system implementation information and system control, including configuration, control, and reporting of system exceptions.

1.4.1.6 Memory Protection Unit (MPU) (see page 91)

The MPU supports the standard ARMv7 Protected Memory System Architecture (PMSA) model. The MPU provides full support for protection regions, overlapping protection regions, access permissions, and exporting memory attributes to the system.

1.4.2 Motor Control Peripherals

To enhance motor control, the LM3S2911 controller features Pulse Width Modulation (PWM) outputs.

1.4.2.1 PWM

Pulse width modulation (PWM) is a powerful technique for digitally encoding analog signal levels. High-resolution counters are used to generate a square wave, and the duty cycle of the square wave is modulated to encode an analog signal. Typical applications include switching power supplies and motor control.

On the LM3S2911, PWM motion control functionality can be achieved through:

- The motion control features of the general-purpose timers using the CCP pins

CCP Pins *(see page 333)*

The General-Purpose Timer Module's CCP (Capture Compare PWM) pins are software programmable to support a simple PWM mode with a software-programmable output inversion of the PWM signal.

1.4.3 Analog Peripherals

For support of analog signals, the LM3S2911 microcontroller offers two analog comparators.

1.4.3.1 Analog Comparators (see page 552)

An analog comparator is a peripheral that compares two analog voltages, and provides a logical output that signals the comparison result.

The LM3S2911 microcontroller provides two independent integrated analog comparators that can be configured to drive an output or generate an interrupt .

A comparator can compare a test voltage against any one of these voltages:

- An individual external reference voltage
- A shared single external reference voltage
- A shared internal reference voltage

The comparator can provide its output to a device pin, acting as a replacement for an analog comparator on the board, or it can be used to signal the application via interrupts to cause it to start capturing a sample sequence.

1.4.4 Serial Communications Peripherals

The LM3S2911 controller supports both asynchronous and synchronous serial communications with:

- Three fully programmable 16C550-type UARTs
- Two SSI modules
- Two I^2C modules
- One CAN unit

1.4.4.1 UART (see page 387)

A Universal Asynchronous Receiver/Transmitter (UART) is an integrated circuit used for RS-232C serial communications, containing a transmitter (parallel-to-serial converter) and a receiver (serial-to-parallel converter), each clocked separately.

The LM3S2911 controller includes three fully programmable 16C550-type UARTs that support data transfer speeds up to 3.125 Mbps. (Although similar in functionality to a 16C550 UART, it is not register-compatible.) In addition, each UART is capable of supporting IrDA.

Separate 16x8 transmit (TX) and receive (RX) FIFOs reduce CPU interrupt service loading. The UART can generate individually masked interrupts from the RX, TX, modem status, and error conditions. The module provides a single combined interrupt when any of the interrupts are asserted and are unmasked.

1.4.4.2 SSI (see page 430)

Synchronous Serial Interface (SSI) is a four-wire bi-directional full and low-speed communications interface.

The LM3S2911 controller includes two SSI modules that provide the functionality for synchronous serial communications with peripheral devices, and can be configured to use the Freescale SPI, MICROWIRE, or TI synchronous serial interface frame formats. The size of the data frame is also configurable, and can be set between 4 and 16 bits, inclusive.

Each SSI module performs serial-to-parallel conversion on data received from a peripheral device, and parallel-to-serial conversion on data transmitted to a peripheral device. The TX and RX paths are buffered with internal FIFOs, allowing up to eight 16-bit values to be stored independently.

Each SSI module can be configured as either a master or slave device. As a slave device, the SSI module can also be configured to disable its output, which allows a master device to be coupled with multiple slave devices.

Each SSI module also includes a programmable bit rate clock divider and prescaler to generate the output serial clock derived from the SSI module's input clock. Bit rates are generated based on the input clock and the maximum bit rate is determined by the connected peripheral.

1.4.4.3 I^2C (see page 468)

The Inter-Integrated Circuit (I^2C) bus provides bi-directional data transfer through a two-wire design (a serial data line SDA and a serial clock line SCL).

The I^2C bus interfaces to external I^2C devices such as serial memory (RAMs and ROMs), networking devices, LCDs, tone generators, and so on. The I^2C bus may also be used for system testing and diagnostic purposes in product development and manufacture.

The LM3S2911 controller includes two I^2C modules that provide the ability to communicate to other IC devices over an I^2C bus. The I^2C bus supports devices that can both transmit and receive (write and read) data.

Devices on the I^2C bus can be designated as either a master or a slave. Each I^2C module supports both sending and receiving data as either a master or a slave, and also supports the simultaneous operation as both a master and a slave. The four I^2C modes are: Master Transmit, Master Receive, Slave Transmit, and Slave Receive.

A Stellaris I^2C module can operate at two speeds: Standard (100 Kbps) and Fast (400 Kbps).

Both the I^2C master and slave can generate interrupts. The I^2C master generates interrupts when a transmit or receive operation completes (or aborts due to an error). The I^2C slave generates interrupts when data has been sent or requested by a master.

1.4.4.4 Controller Area Network (see page 505)

Controller Area Network (CAN) is a multicast shared serial-bus standard for connecting electronic control units (ECUs). CAN was specifically designed to be robust in electromagnetically noisy environments and can utilize a differential balanced line like RS-485 or a more robust twisted-pair wire. Originally created for automotive purposes, now it is used in many embedded control applications (for example, industrial or medical). Bit rates up to 1Mb/s are possible at network lengths below 40 meters. Decreased bit rates allow longer network distances (for example, 125 Kb/s at 500m).

A transmitter sends a message to all CAN nodes (broadcasting). Each node decides on the basis of the identifier received whether it should process the message. The identifier also determines the priority that the message enjoys in competition for bus access. Each CAN message can transmit from 0 to 8 bytes of user information. The LM3S2911 includes one CAN unit.

1.4.5 System Peripherals

1.4.5.1 Programmable GPIOs (see page 278)

General-purpose input/output (GPIO) pins offer flexibility for a variety of connections.

The Stellaris GPIO module is comprised of eight physical GPIO blocks, each corresponding to an individual GPIO port. The GPIO module is FiRM-compliant (compliant to the ARM Foundation IP for Real-Time Microcontrollers specification) and supports 21-60 programmable input/output pins. The number of GPIOs available depends on the peripherals being used (see “Signal Tables” on page 566 for the signals available to each GPIO pin).

The GPIO module features programmable interrupt generation as either edge-triggered or level-sensitive on all pins, programmable control for GPIO pad configuration, and bit masking in both read and write operations through address lines. Pins configured as digital inputs are Schmitt-triggered.

1.4.5.2 Four Programmable Timers (see page 326)

Programmable timers can be used to count or time external events that drive the Timer input pins.

The Stellaris General-Purpose Timer Module (GPTM) contains four GPTM blocks. Each GPTM block provides two 16-bit timers/counters that can be configured to operate independently as timers or event counters, or configured to operate as one 32-bit timer or one 32-bit Real-Time Clock (RTC).

When configured in 32-bit mode, a timer can run as a Real-Time Clock (RTC), one-shot timer or periodic timer. When in 16-bit mode, a timer can run as a one-shot timer or periodic timer, and can extend its precision by using an 8-bit prescaler. A 16-bit timer can also be configured for event capture or Pulse Width Modulation (PWM) generation.

1.4.5.3 Watchdog Timer (see page 363)

A watchdog timer can generate an interrupt or a reset when a time-out value is reached. The watchdog timer is used to regain control when a system has failed due to a software error or to the failure of an external device to respond in the expected way.

The Stellaris Watchdog Timer module consists of a 32-bit down counter, a programmable load register, interrupt generation logic, and a locking register.

The Watchdog Timer can be configured to generate an interrupt to the controller on its first time-out, and to generate a reset signal on its second time-out. Once the Watchdog Timer has been configured, the lock register can be written to prevent the timer configuration from being inadvertently altered.

1.4.6 Memory Peripherals

The LM3S2911 controller offers both single-cycle SRAM and single-cycle Flash memory.

1.4.6.1 SRAM (see page 252)

The LM3S2911 static random access memory (SRAM) controller supports 64 KB SRAM. The internal SRAM of the Stellaris devices starts at base address 0x2000.0000 of the device memory map. To reduce the number of time-consuming read-modify-write (RMW) operations, ARM has introduced *bit-banding* technology in the new Cortex-M3 processor. With a bit-band-enabled processor, certain regions in the memory map (SRAM and peripheral space) can use address aliases to access individual bits in a single, atomic operation.

1.4.6.2 Flash (see page 253)

The LM3S2911 Flash controller supports 256 KB of flash memory. The flash is organized as a set of 1-KB blocks that can be individually erased. Erasing a block causes the entire contents of the block to be reset to all 1s. These blocks are paired into a set of 2-KB blocks that can be individually protected. The blocks can be marked as read-only or execute-only, providing different levels of code protection. Read-only blocks cannot be erased or programmed, protecting the contents of those blocks from being modified. Execute-only blocks cannot be erased or programmed, and can only be read by the controller instruction fetch mechanism, protecting the contents of those blocks from being read by either the controller or by a debugger.

1.4.7 Additional Features

1.4.7.1 JTAG TAP Controller (see page 152)

The Joint Test Action Group (JTAG) port is an IEEE standard that defines a Test Access Port and Boundary Scan Architecture for digital integrated circuits and provides a standardized serial interface for controlling the associated test logic. The TAP, Instruction Register (IR), and Data Registers (DR) can be used to test the interconnections of assembled printed circuit boards and obtain manufacturing information on the components. The JTAG Port also provides a means of accessing and controlling design-for-test features such as I/O pin observation and control, scan testing, and debugging.

The JTAG port is composed of the standard five pins: $\overline{\text{TRST}}$, `TCK`, `TMS`, `TDI`, and `TDO`. Data is transmitted serially into the controller on `TDI` and out of the controller on `TDO`. The interpretation of this data is dependent on the current state of the TAP controller. For detailed information on the operation of the JTAG port and TAP controller, please refer to the *IEEE Standard 1149.1-Test Access Port and Boundary-Scan Architecture*.

The Stellaris JTAG controller works with the ARM JTAG controller built into the Cortex-M3 core. This is implemented by multiplexing the `TDO` outputs from both JTAG controllers. ARM JTAG instructions select the ARM `TDO` output while Stellaris JTAG instructions select the Stellaris `TDO`

outputs. The multiplexer is controlled by the Stellaris JTAG controller, which has comprehensive programming for the ARM, Stellaris, and unimplemented JTAG instructions.

1.4.7.2 System Control and Clocks (see page 165)

System control determines the overall operation of the device. It provides information about the device, controls the clocking of the device and individual peripherals, and handles reset detection and reporting.

1.4.7.3 Hibernation Module (see page 231)

The Hibernation module provides logic to switch power off to the main processor and peripherals, and to wake on external or time-based events. The Hibernation module includes power-sequencing logic, a real-time clock with a pair of match registers, low-battery detection circuitry, and interrupt signalling to the processor. It also includes 64 32-bit words of non-volatile memory that can be used for saving state during hibernation.

1.4.8 Hardware Details

Details on the pins and package can be found in the following sections:

- “Pin Diagram” on page 564
- “Signal Tables” on page 566
- “Operating Characteristics” on page 593
- “Electrical Characteristics” on page 594
- “Package Information” on page 634

2 The Cortex-M3 Processor

The ARM® Cortex™-M3 processor provides a high-performance, low-cost platform that meets the system requirements of minimal memory implementation, reduced pin count, and low power consumption, while delivering outstanding computational performance and exceptional system response to interrupts. Features include:

- Compact core.
- Thumb-2 instruction set, delivering the high-performance expected of an ARM core in the memory size usually associated with 8- and 16-bit devices; typically in the range of a few kilobytes of memory for microcontroller class applications.
- Rapid application execution through Harvard architecture characterized by separate buses for instruction and data.
- Exceptional interrupt handling, by implementing the register manipulations required for handling an interrupt in hardware.
- Deterministic, fast interrupt processing: always 12 cycles, or just 6 cycles with tail-chaining
- Memory protection unit (MPU) to provide a privileged mode of operation for complex applications.
- Migration from the ARM7™ processor family for better performance and power efficiency.
- Full-featured debug solution
  - Serial Wire JTAG Debug Port (SWJ-DP)
  - Flash Patch and Breakpoint (FPB) unit for implementing breakpoints
  - Data Watchpoint and Trigger (DWT) unit for implementing watchpoints, trigger resources, and system profiling
  - Instrumentation Trace Macrocell (ITM) for support of printf style debugging
  - Trace Port Interface Unit (TPIU) for bridging to a Trace Port Analyzer
- Optimized for single-cycle flash usage
- Three sleep modes with clock gating for low power
- Single-cycle multiply instruction and hardware divide
- Atomic operations
- ARM Thumb2 mixed 16-/32-bit instruction set
- 1.25 DMIPS/MHz

The Stellaris® family of microcontrollers builds on this core to bring high-performance 32-bit computing to cost-sensitive embedded microcontroller applications, such as factory automation and control, industrial control power devices, building and home automation, and stepper motor control.

This chapter provides information on the Stellaris implementation of the Cortex-M3 processor, including the programming model, the memory model, the exception model, fault handling, and power management.

For technical details on the instruction set, see the *Cortex™-M3/M4 Instruction Set Technical User's Manual*.

2.1 Block Diagram

The Cortex-M3 processor is built on a high-performance processor core, with a 3-stage pipeline Harvard architecture, making it ideal for demanding embedded applications. The processor delivers exceptional power efficiency through an efficient instruction set and extensively optimized design, providing high-end processing hardware including a range of single-cycle and SIMD multiplication and multiply-with-accumulate capabilities, saturating arithmetic and dedicated hardware division.

To facilitate the design of cost-sensitive devices, the Cortex-M3 processor implements tightly coupled system components that reduce processor area while significantly improving interrupt handling and system debug capabilities. The Cortex-M3 processor implements a version of the Thumb® instruction set based on Thumb-2 technology, ensuring high code density and reduced program memory requirements. The Cortex-M3 instruction set provides the exceptional performance expected of a modern 32-bit architecture, with the high code density of 8-bit and 16-bit microcontrollers.

The Cortex-M3 processor closely integrates a nested interrupt controller (NVIC), to deliver industry-leading interrupt performance. The Stellaris NVIC includes a non-maskable interrupt (NMI) and provides eight interrupt priority levels. The tight integration of the processor core and NVIC provides fast execution of interrupt service routines (ISRs), dramatically reducing interrupt latency. The hardware stacking of registers and the ability to suspend load-multiple and store-multiple operations further reduce interrupt latency. Interrupt handlers do not require any assembler stubs which removes code overhead from the ISRs. Tail-chaining optimization also significantly reduces the overhead when switching from one ISR to another. To optimize low-power designs, the NVIC integrates with the sleep modes, including Deep-sleep mode, which enables the entire device to be rapidly powered down.

Figure 2-1. CPU Block Diagram

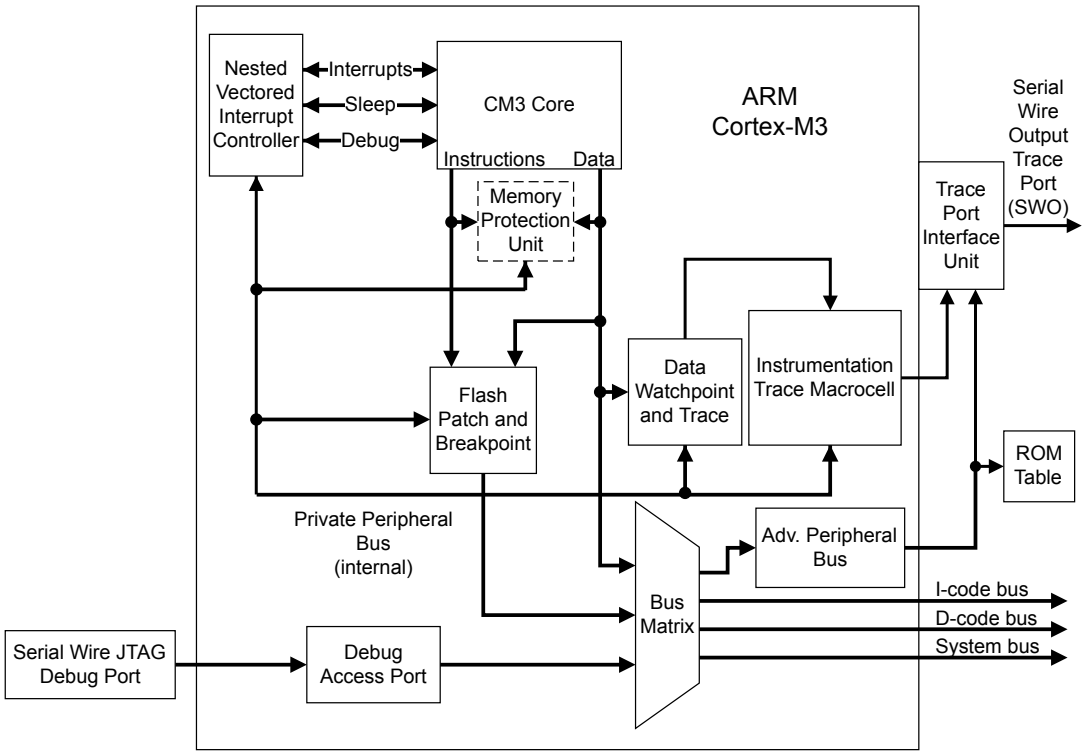

2.2 Overview

2.2.1 System-Level Interface

The Cortex-M3 processor provides multiple interfaces using AMBA® technology to provide high-speed, low-latency memory accesses. The core supports unaligned data accesses and implements atomic bit manipulation that enables faster peripheral controls, system spinlocks, and thread-safe Boolean data handling.

The Cortex-M3 processor has a memory protection unit (MPU) that provides fine-grain memory control, enabling applications to implement security privilege levels and separate code, data and stack on a task-by-task basis.

2.2.2 Integrated Configurable Debug

The Cortex-M3 processor implements a complete hardware debug solution, providing high system visibility of the processor and memory through either a traditional JTAG port or a 2-pin Serial Wire Debug (SWD) port that is ideal for microcontrollers and other small package devices. The Stellaris implementation replaces the ARM SW-DP and JTAG-DP with the ARM CoreSight™-compliant Serial Wire JTAG Debug Port (SWJ-DP) interface. The SWJ-DP interface combines the SWD and JTAG debug ports into one module. See the *ARM® Debug Interface V5 Architecture Specification* for details on SWJ-DP.

For system trace, the processor integrates an Instrumentation Trace Macrocell (ITM) alongside data watchpoints and a profiling unit. To enable simple and cost-effective profiling of the system trace events, a Serial Wire Viewer (SWV) can export a stream of software-generated messages, data trace, and profiling information through a single pin.

The Flash Patch and Breakpoint Unit (FPB) provides up to eight hardware breakpoint comparators that debuggers can use. The comparators in the FPB also provide remap functions of up to eight words in the program code in the CODE memory region. This enables applications stored in a read-only area of Flash memory to be patched in another area of on-chip SRAM or Flash memory. If a patch is required, the application programs the FPB to remap a number of addresses. When those addresses are accessed, the accesses are redirected to a remap table specified in the FPB configuration.

For more information on the Cortex-M3 debug capabilities, see the*ARM® Debug Interface V5 Architecture Specification*.

2.2.3 Trace Port Interface Unit (TPIU)

The TPIU acts as a bridge between the Cortex-M3 trace data from the ITM, and an off-chip Trace Port Analyzer, as shown in Figure 2-2 on page 49.

Figure 2-2. TPIU Block Diagram

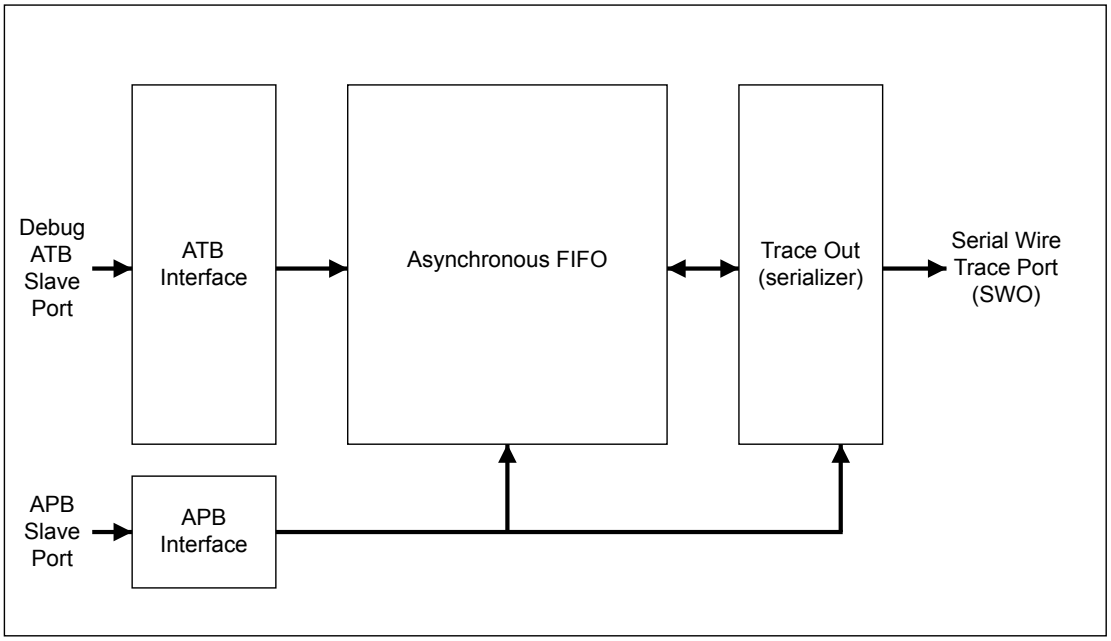

2.2.4 Cortex-M3 System Component Details

The Cortex-M3 includes the following system components:

- SysTick

  A 24-bit count-down timer that can be used as a Real-Time Operating System (RTOS) tick timer or as a simple counter (see “System Timer (SysTick)” on page 88).

- Nested Vectored Interrupt Controller (NVIC)

  An embedded interrupt controller that supports low latency interrupt processing (see “Nested Vectored Interrupt Controller (NVIC)” on page 89).

- System Control Block (SCB)

The programming model interface to the processor. The SCB provides system implementation information and system control, including configuration, control, and reporting of system exceptions (see “System Control Block (SCB)” on page 91).

- Memory Protection Unit (MPU)

  Improves system reliability by defining the memory attributes for different memory regions. The MPU provides up to eight different regions and an optional predefined background region (see “Memory Protection Unit (MPU)” on page 91).

2.3 Programming Model

This section describes the Cortex-M3 programming model. In addition to the individual core register descriptions, information about the processor modes and privilege levels for software execution and stacks is included.

2.3.1 Processor Mode and Privilege Levels for Software Execution

The Cortex-M3 has two modes of operation:

- Thread mode

  Used to execute application software. The processor enters Thread mode when it comes out of reset.

- Handler mode

  Used to handle exceptions. When the processor has finished exception processing, it returns to Thread mode.

In addition, the Cortex-M3 has two privilege levels:

- Unprivileged

  In this mode, software has the following restrictions:

  – Limited access to the `MSR` and `MRS` instructions and no use of the `CPS` instruction

  – No access to the system timer, NVIC, or system control block

  – Possibly restricted access to memory or peripherals

- Privileged

  In this mode, software can use all the instructions and has access to all resources.

In Thread mode, the **CONTROL** register (see page 64) controls whether software execution is privileged or unprivileged. In Handler mode, software execution is always privileged.

Only privileged software can write to the **CONTROL** register to change the privilege level for software execution in Thread mode. Unprivileged software can use the `SVC` instruction to make a supervisor call to transfer control to privileged software.

2.3.2 Stacks

The processor uses a full descending stack, meaning that the stack pointer indicates the last stacked item on the memory. When the processor pushes a new item onto the stack, it decrements the stack pointer and then writes the item to the new memory location. The processor implements two stacks:

the main stack and the process stack, with a pointer for each held in independent registers (see the **SP** register on page 54).

In Thread mode, the **CONTROL** register (see page 64) controls whether the processor uses the main stack or the process stack. In Handler mode, the processor always uses the main stack. The options for processor operations are shown in Table 2-1 on page 51.

Table 2-1. Summary of Processor Mode, Privilege Level, and Stack Use

Processor Mode	Use	Privilege Level	Stack Used
Thread	Applications	Privileged or unprivileged [a]	Main stack or process stack [a]
Handler	Exception handlers	Always privileged	Main stack

a. See **CONTROL** (page 64).

2.3.3 Register Map

Figure 2-3 on page 51 shows the Cortex-M3 register set. Table 2-2 on page 52 lists the Core registers. The core registers are not memory mapped and are accessed by register name, so the base address is n/a (not applicable) and there is no offset.

Figure 2-3. Cortex-M3 Register Set

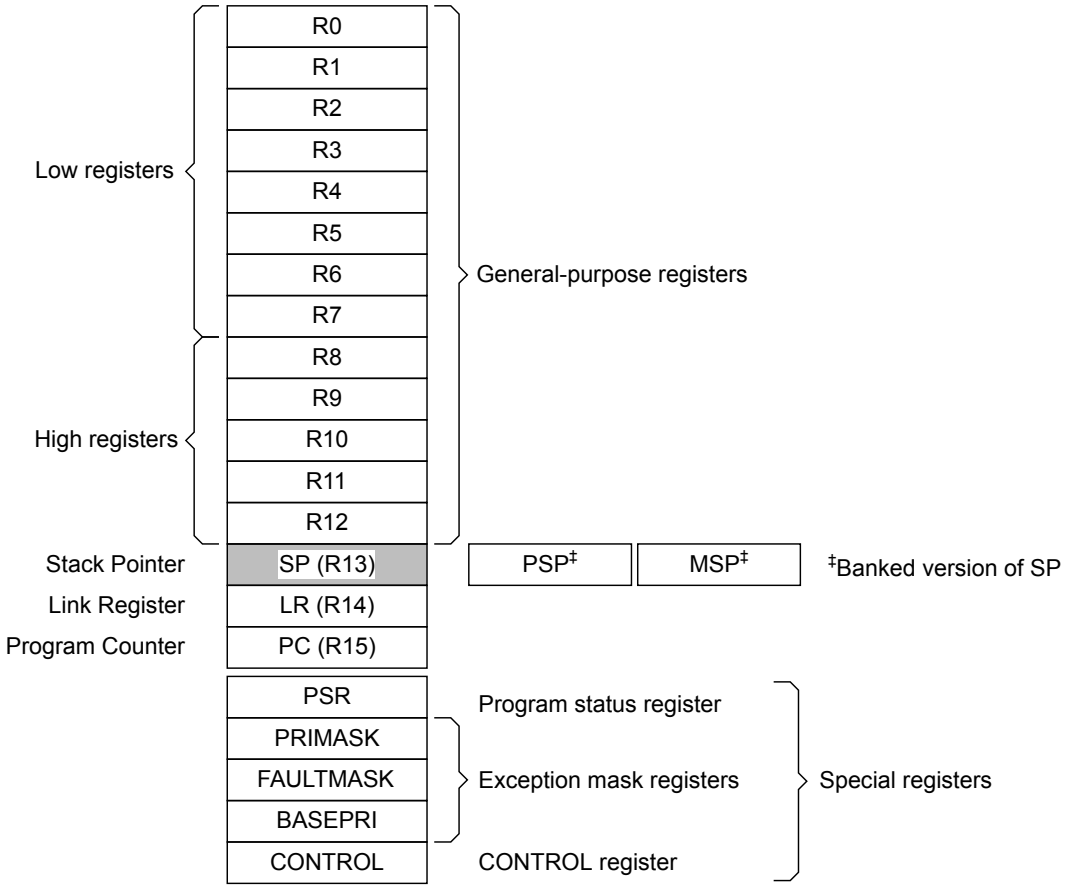

Table 2-2. Processor Register Map

Offset	Name	Type	Reset	Description	See page
-	R0	R/W	-	Cortex General-Purpose Register 0	53
-	R1	R/W	-	Cortex General-Purpose Register 1	53
-	R2	R/W	-	Cortex General-Purpose Register 2	53
-	R3	R/W	-	Cortex General-Purpose Register 3	53
-	R4	R/W	-	Cortex General-Purpose Register 4	53
-	R5	R/W	-	Cortex General-Purpose Register 5	53
-	R6	R/W	-	Cortex General-Purpose Register 6	53
-	R7	R/W	-	Cortex General-Purpose Register 7	53
-	R8	R/W	-	Cortex General-Purpose Register 8	53
-	R9	R/W	-	Cortex General-Purpose Register 9	53
-	R10	R/W	-	Cortex General-Purpose Register 10	53
-	R11	R/W	-	Cortex General-Purpose Register 11	53
-	R12	R/W	-	Cortex General-Purpose Register 12	53
-	SP	R/W	-	Stack Pointer	54
-	LR	R/W	0xFFFF.FFFF	Link Register	55
-	PC	R/W	-	Program Counter	56
-	PSR	R/W	0x0100.0000	Program Status Register	57
-	PRIMASK	R/W	0x0000.0000	Priority Mask Register	61
-	FAULTMASK	R/W	0x0000.0000	Fault Mask Register	62
-	BASEPRI	R/W	0x0000.0000	Base Priority Mask Register	63
-	CONTROL	R/W	0x0000.0000	Control Register	64

2.3.4 Register Descriptions

This section lists and describes the Cortex-M3 registers, in the order shown in Figure 2-3 on page 51. The core registers are not memory mapped and are accessed by register name rather than offset.

Note: The register type shown in the register descriptions refers to type during program execution in Thread mode and Handler mode. Debug access can differ.

Register 1: Cortex General-Purpose Register 0 (R0)

Register 2: Cortex General-Purpose Register 1 (R1)

Register 3: Cortex General-Purpose Register 2 (R2)

Register 4: Cortex General-Purpose Register 3 (R3)

Register 5: Cortex General-Purpose Register 4 (R4)

Register 6: Cortex General-Purpose Register 5 (R5)

Register 7: Cortex General-Purpose Register 6 (R6)

Register 8: Cortex General-Purpose Register 7 (R7)

Register 9: Cortex General-Purpose Register 8 (R8)

Register 10: Cortex General-Purpose Register 9 (R9)

Register 11: Cortex General-Purpose Register 10 (R10)

Register 12: Cortex General-Purpose Register 11 (R11)

Register 13: Cortex General-Purpose Register 12 (R12)

The **Rn** registers are 32-bit general-purpose registers for data operations and can be accessed from either privileged or unprivileged mode.

Cortex General-Purpose Register 0 (R0)

Type R/W, reset -

	31	30	29	28	27	26	25	24	23	22	21	20	19	18	17	16
	DATA															
Type	R/W	R/W	R/W	R/W	R/W	R/W	R/W	R/W	R/W	R/W	R/W	R/W	R/W	R/W	R/W	R/W
Reset	-	-	-	-	-	-	-	-	-	-	-	-	-	-	-	-

	15	14	13	12	11	10	9	8	7	6	5	4	3	2	1	0
	DATA															
Type	R/W	R/W	R/W	R/W	R/W	R/W	R/W	R/W	R/W	R/W	R/W	R/W	R/W	R/W	R/W	R/W
Reset	-	-	-	-	-	-	-	-	-	-	-	-	-	-	-	-

Bit/Field	Name	Type	Reset	Description
31:0	DATA	R/W	-	Register data.

Register 14: Stack Pointer (SP)

The **Stack Pointer (SP)** is register R13. In Thread mode, the function of this register changes depending on the ASP bit in the **Control Register (CONTROL)** register. When the ASP bit is clear, this register is the **Main Stack Pointer (MSP)**. When the ASP bit is set, this register is the **Process Stack Pointer (PSP)**. On reset, the ASP bit is clear, and the processor loads the **MSP** with the value from address 0x0000.0000. The **MSP** can only be accessed in privileged mode; the **PSP** can be accessed in either privileged or unprivileged mode.

Stack Pointer (SP)

Type R/W, reset -

	31	30	29	28	27	26	25	24	23	22	21	20	19	18	17	16
	SP															
Type	R/W	R/W	R/W	R/W	R/W	R/W	R/W	R/W	R/W	R/W	R/W	R/W	R/W	R/W	R/W	R/W
Reset	-	-	-	-	-	-	-	-	-	-	-	-	-	-	-	-

	15	14	13	12	11	10	9	8	7	6	5	4	3	2	1	0
	SP															
Type	R/W	R/W	R/W	R/W	R/W	R/W	R/W	R/W	R/W	R/W	R/W	R/W	R/W	R/W	R/W	R/W
Reset	-	-	-	-	-	-	-	-	-	-	-	-	-	-	-	-

Bit/Field	Name	Type	Reset	Description
31:0	SP	R/W	-	This field is the address of the stack pointer.

Register 15: Link Register (LR)

The **Link Register (LR)** is register R14, and it stores the return information for subroutines, function calls, and exceptions. **LR** can be accessed from either privileged or unprivileged mode.

EXC_RETURN is loaded into **LR** on exception entry. See Table 2-10 on page 81 for the values and description.

Link Register (LR)

Type R/W, reset 0xFFFF.FFFF

	31	30	29	28	27	26	25	24	23	22	21	20	19	18	17	16
	LINK															
Type	R/W	R/W	R/W	R/W	R/W	R/W	R/W	R/W	R/W	R/W	R/W	R/W	R/W	R/W	R/W	R/W
Reset	1	1	1	1	1	1	1	1	1	1	1	1	1	1	1	1

	15	14	13	12	11	10	9	8	7	6	5	4	3	2	1	0
	LINK															
Type	R/W	R/W	R/W	R/W	R/W	R/W	R/W	R/W	R/W	R/W	R/W	R/W	R/W	R/W	R/W	R/W
Reset	1	1	1	1	1	1	1	1	1	1	1	1	1	1	1	1

Bit/Field	Name	Type	Reset	Description
31:0	LINK	R/W	0xFFFF.FFFF	This field is the return address.

Register 16: Program Counter (PC)

The **Program Counter (PC)** is register R15, and it contains the current program address. On reset, the processor loads the **PC** with the value of the reset vector, which is at address 0x0000.0004. Bit 0 of the reset vector is loaded into the THUMB bit of the **EPSR** at reset and must be 1. The **PC** register can be accessed in either privileged or unprivileged mode.

Program Counter (PC)

Type R/W, reset -

	31	30	29	28	27	26	25	24	23	22	21	20	19	18	17	16
	PC															
Type	R/W	R/W	R/W	R/W	R/W	R/W	R/W	R/W	R/W	R/W	R/W	R/W	R/W	R/W	R/W	R/W
Reset	-	-	-	-	-	-	-	-	-	-	-	-	-	-	-	-

	15	14	13	12	11	10	9	8	7	6	5	4	3	2	1	0
	PC															
Type	R/W	R/W	R/W	R/W	R/W	R/W	R/W	R/W	R/W	R/W	R/W	R/W	R/W	R/W	R/W	R/W
Reset	-	-	-	-	-	-	-	-	-	-	-	-	-	-	-	-

Bit/Field	Name	Type	Reset	Description
31:0	PC	R/W	-	This field is the current program address.

Register 17: Program Status Register (PSR)

Note: This register is also referred to as **xPSR**.

The **Program Status Register (PSR)** has three functions, and the register bits are assigned to the different functions:

- **Application Program Status Register (APSR)**, bits 31:27,
- **Execution Program Status Register (EPSR)**, bits 26:24, 15:10
- **Interrupt Program Status Register (IPSR)**, bits 5:0

The **PSR**, **IPSR**, and **EPSR** registers can only be accessed in privileged mode; the **APSR** register can be accessed in either privileged or unprivileged mode.

APSR contains the current state of the condition flags from previous instruction executions.

EPSR contains the Thumb state bit and the execution state bits for the If-Then (`IT`) instruction or the Interruptible-Continuable Instruction (`ICI`) field for an interrupted load multiple or store multiple instruction. Attempts to read the **EPSR** directly through application software using the `MSR` instruction always return zero. Attempts to write the **EPSR** using the `MSR` instruction in application software are always ignored. Fault handlers can examine the **EPSR** value in the stacked **PSR** to determine the operation that faulted (see "Exception Entry and Return" on page 79).

IPSR contains the exception type number of the current Interrupt Service Routine (ISR).

These registers can be accessed individually or as a combination of any two or all three registers, using the register name as an argument to the `MSR` or `MRS` instructions. For example, all of the registers can be read using **PSR** with the `MRS` instruction, or **APSR** only can be written to using **APSR** with the `MSR` instruction. page 57 shows the possible register combinations for the **PSR**. See the `MRS` and `MSR` instruction descriptions in the *Cortex™-M3/M4 Instruction Set Technical User's Manual* for more information about how to access the program status registers.

Table 2-3. PSR Register Combinations

Register	Type	Combination
PSR	R/W[a, b]	**APSR**, **EPSR**, and **IPSR**
IEPSR	RO	**EPSR** and **IPSR**
IAPSR	R/W[a]	**APSR** and **IPSR**
EAPSR	R/W[b]	**APSR** and **EPSR**

a. The processor ignores writes to the **IPSR** bits.

b. Reads of the **EPSR** bits return zero, and the processor ignores writes to these bits.

Program Status Register (PSR)

Type R/W, reset 0x0100.0000

	31	30	29	28	27	26	25	24	23	22	21	20	19	18	17	16
	N	Z	C	V	Q	ICI / IT		THUMB	reserved							
Type	R/W	R/W	R/W	R/W	R/W	RO	RO	RO	RO	RO	RO	RO	RO	RO	RO	RO
Reset	0	0	0	0	0	0	0	1	0	0	0	0	0	0	0	0

	15	14	13	12	11	10	9	8	7	6	5	4	3	2	1	0
	ICI / IT						reserved				ISRNUM					
Type	RO	RO	RO	RO	RO	RO	RO	RO	RO	RO	RO	RO	RO	RO	RO	RO
Reset	0	0	0	0	0	0	0	0	0	0	0	0	0	0	0	0

Bit/Field	Name	Type	Reset	Description
31	N	R/W	0	**APSR** Negative or Less Flag Value Description 1 The previous operation result was negative or less than. 0 The previous operation result was positive, zero, greater than, or equal. The value of this bit is only meaningful when accessing **PSR** or **APSR**.
30	Z	R/W	0	**APSR** Zero Flag Value Description 1 The previous operation result was zero. 0 The previous operation result was non-zero. The value of this bit is only meaningful when accessing **PSR** or **APSR**.
29	C	R/W	0	**APSR** Carry or Borrow Flag Value Description 1 The previous add operation resulted in a carry bit or the previous subtract operation did not result in a borrow bit. 0 The previous add operation did not result in a carry bit or the previous subtract operation resulted in a borrow bit. The value of this bit is only meaningful when accessing **PSR** or **APSR**.
28	V	R/W	0	**APSR** Overflow Flag Value Description 1 The previous operation resulted in an overflow. 0 The previous operation did not result in an overflow. The value of this bit is only meaningful when accessing **PSR** or **APSR**.
27	Q	R/W	0	**APSR** DSP Overflow and Saturation Flag Value Description 1 DSP Overflow or saturation has occurred. 0 DSP overflow or saturation has not occurred since reset or since the bit was last cleared. The value of this bit is only meaningful when accessing **PSR** or **APSR**. This bit is cleared by software using an `MRS` instruction.

Bit/Field	Name	Type	Reset	Description
26:25	ICI / IT	RO	0x0	**EPSR** ICI / IT status These bits, along with bits 15:10, contain the Interruptible-Continuable Instruction (`ICI`) field for an interrupted load multiple or store multiple instruction or the execution state bits of the `IT` instruction. When **EPSR** holds the `ICI` execution state, bits 26:25 are zero. The If-Then block contains up to four instructions following an `IT` instruction. Each instruction in the block is conditional. The conditions for the instructions are either all the same, or some can be the inverse of others. See the *Cortex™-M3/M4 Instruction Set Technical User's Manual* for more information. The value of this field is only meaningful when accessing **PSR** or **EPSR**.
24	THUMB	RO	1	**EPSR** Thumb State This bit indicates the Thumb state and should always be set. The following can clear the `THUMB` bit: ■ The `BLX`, `BX` and `POP{PC}` instructions ■ Restoration from the stacked **xPSR** value on an exception return ■ Bit 0 of the vector value on an exception entry or reset Attempting to execute instructions when this bit is clear results in a fault or lockup. See “Lockup” on page 83 for more information. The value of this bit is only meaningful when accessing **PSR** or **EPSR**.
23:16	reserved	RO	0x00	Software should not rely on the value of a reserved bit. To provide compatibility with future products, the value of a reserved bit should be preserved across a read-modify-write operation.
15:10	ICI / IT	RO	0x0	**EPSR** ICI / IT status These bits, along with bits 26:25, contain the Interruptible-Continuable Instruction (`ICI`) field for an interrupted load multiple or store multiple instruction or the execution state bits of the `IT` instruction. When an interrupt occurs during the execution of an `LDM`, `STM`, `PUSH` or `POP` instruction, the processor stops the load multiple or store multiple instruction operation temporarily and stores the next register operand in the multiple operation to bits 15:12. After servicing the interrupt, the processor returns to the register pointed to by bits 15:12 and resumes execution of the multiple load or store instruction. When **EPSR** holds the `ICI` execution state, bits 11:10 are zero. The If-Then block contains up to four instructions following a 16-bit `IT` instruction. Each instruction in the block is conditional. The conditions for the instructions are either all the same, or some can be the inverse of others. See the *Cortex™-M3/M4 Instruction Set Technical User's Manual* for more information. The value of this field is only meaningful when accessing **PSR** or **EPSR**.
9:6	reserved	RO	0x0	Software should not rely on the value of a reserved bit. To provide compatibility with future products, the value of a reserved bit should be preserved across a read-modify-write operation.

Bit/Field	Name	Type	Reset	Description
5:0	ISRNUM	RO	0x00	**IPSR** ISR Number This field contains the exception type number of the current Interrupt Service Routine (ISR). Value — Description 0x00 — Thread mode 0x01 — Reserved 0x02 — NMI 0x03 — Hard fault 0x04 — Memory management fault 0x05 — Bus fault 0x06 — Usage fault 0x07-0x0A — Reserved 0x0B — SVCall 0x0C — Reserved for Debug 0x0D — Reserved 0x0E — PendSV 0x0F — SysTick 0x10 — Interrupt Vector 0 0x11 — Interrupt Vector 1 ... — ... 0x3B — Interrupt Vector 43 0x3C-0x3F — Reserved See “Exception Types” on page 74 for more information. The value of this field is only meaningful when accessing **PSR** or **IPSR**.

Register 18: Priority Mask Register (PRIMASK)

The **PRIMASK** register prevents activation of all exceptions with programmable priority. Reset, non-maskable interrupt (NMI), and hard fault are the only exceptions with fixed priority. Exceptions should be disabled when they might impact the timing of critical tasks. This register is only accessible in privileged mode. The `MSR` and `MRS` instructions are used to access the **PRIMASK** register, and the `CPS` instruction may be used to change the value of the **PRIMASK** register. See the *Cortex™-M3/M4 Instruction Set Technical User's Manual* for more information on these instructions. For more information on exception priority levels, see “Exception Types” on page 74.

Priority Mask Register (PRIMASK)

Type R/W, reset 0x0000.0000

	31	30	29	28	27	26	25	24	23	22	21	20	19	18	17	16
	reserved															
Type	RO	RO	RO	RO	RO	RO	RO	RO	RO	RO	RO	RO	RO	RO	RO	RO
Reset	0	0	0	0	0	0	0	0	0	0	0	0	0	0	0	0

	15	14	13	12	11	10	9	8	7	6	5	4	3	2	1	0
	reserved															PRIMASK
Type	RO	RO	RO	RO	RO	RO	RO	RO	RO	RO	RO	RO	RO	RO	RO	R/W
Reset	0	0	0	0	0	0	0	0	0	0	0	0	0	0	0	0

Bit/Field	Name	Type	Reset	Description
31:1	reserved	RO	0x0000.000	Software should not rely on the value of a reserved bit. To provide compatibility with future products, the value of a reserved bit should be preserved across a read-modify-write operation.
0	PRIMASK	R/W	0	Priority Mask Value Description 1 Prevents the activation of all exceptions with configurable priority. 0 No effect.

Register 19: Fault Mask Register (FAULTMASK)

The **FAULTMASK** register prevents activation of all exceptions except for the Non-Maskable Interrupt (NMI). Exceptions should be disabled when they might impact the timing of critical tasks. This register is only accessible in privileged mode. The `MSR` and `MRS` instructions are used to access the **FAULTMASK** register, and the `CPS` instruction may be used to change the value of the **FAULTMASK** register. See the *Cortex™-M3/M4 Instruction Set Technical User's Manual* for more information on these instructions. For more information on exception priority levels, see “Exception Types” on page 74.

Fault Mask Register (FAULTMASK)

Type R/W, reset 0x0000.0000

	31	30	29	28	27	26	25	24	23	22	21	20	19	18	17	16
	reserved															
Type	RO	RO	RO	RO	RO	RO	RO	RO	RO	RO	RO	RO	RO	RO	RO	RO
Reset	0	0	0	0	0	0	0	0	0	0	0	0	0	0	0	0

	15	14	13	12	11	10	9	8	7	6	5	4	3	2	1	0
	reserved															FAULTMASK
Type	RO	RO	RO	RO	RO	RO	RO	RO	RO	RO	RO	RO	RO	RO	RO	R/W
Reset	0	0	0	0	0	0	0	0	0	0	0	0	0	0	0	0

Bit/Field	Name	Type	Reset	Description
31:1	reserved	RO	0x0000.000	Software should not rely on the value of a reserved bit. To provide compatibility with future products, the value of a reserved bit should be preserved across a read-modify-write operation.
0	FAULTMASK	R/W	0	Fault Mask Value Description 1 Prevents the activation of all exceptions except for NMI. 0 No effect. The processor clears the `FAULTMASK` bit on exit from any exception handler except the NMI handler.

Register 20: Base Priority Mask Register (BASEPRI)

The **BASEPRI** register defines the minimum priority for exception processing. When **BASEPRI** is set to a nonzero value, it prevents the activation of all exceptions with the same or lower priority level as the **BASEPRI** value. Exceptions should be disabled when they might impact the timing of critical tasks. This register is only accessible in privileged mode. For more information on exception priority levels, see “Exception Types” on page 74.

Base Priority Mask Register (BASEPRI)

Type R/W, reset 0x0000.0000

	31	30	29	28	27	26	25	24	23	22	21	20	19	18	17	16
	reserved															
Type	RO	RO	RO	RO	RO	RO	RO	RO	RO	RO	RO	RO	RO	RO	RO	RO
Reset	0	0	0	0	0	0	0	0	0	0	0	0	0	0	0	0

	15	14	13	12	11	10	9	8	7	6	5	4	3	2	1	0
	reserved								BASEPRI			reserved				
Type	RO	RO	RO	RO	RO	RO	RO	RO	R/W	R/W	R/W	RO	RO	RO	RO	RO
Reset	0	0	0	0	0	0	0	0	0	0	0	0	0	0	0	0

Bit/Field	Name	Type	Reset	Description
31:8	reserved	RO	0x0000.00	Software should not rely on the value of a reserved bit. To provide compatibility with future products, the value of a reserved bit should be preserved across a read-modify-write operation.
7:5	BASEPRI	R/W	0x0	Base Priority Any exception that has a programmable priority level with the same or lower priority as the value of this field is masked. The **PRIMASK** register can be used to mask all exceptions with programmable priority levels. Higher priority exceptions have lower priority levels. Value Description 0x0 All exceptions are unmasked. 0x1 All exceptions with priority level 1-7 are masked. 0x2 All exceptions with priority level 2-7 are masked. 0x3 All exceptions with priority level 3-7 are masked. 0x4 All exceptions with priority level 4-7 are masked. 0x5 All exceptions with priority level 5-7 are masked. 0x6 All exceptions with priority level 6-7 are masked. 0x7 All exceptions with priority level 7 are masked.
4:0	reserved	RO	0x0	Software should not rely on the value of a reserved bit. To provide compatibility with future products, the value of a reserved bit should be preserved across a read-modify-write operation.

Register 21: Control Register (CONTROL)

The **CONTROL** register controls the stack used and the privilege level for software execution when the processor is in Thread mode. This register is only accessible in privileged mode.

Handler mode always uses **MSP**, so the processor ignores explicit writes to the ASP bit of the **CONTROL** register when in Handler mode. The exception entry and return mechanisms automatically update the **CONTROL** register based on the EXC_RETURN value (see Table 2-10 on page 81). In an OS environment, threads running in Thread mode should use the process stack and the kernel and exception handlers should use the main stack. By default, Thread mode uses **MSP**. To switch the stack pointer used in Thread mode to **PSP**, either use the MSR instruction to set the ASP bit, as detailed in the *Cortex™-M3/M4 Instruction Set Technical User's Manual*, or perform an exception return to Thread mode with the appropriate EXC_RETURN value, as shown in Table 2-10 on page 81.

Note: When changing the stack pointer, software must use an ISB instruction immediately after the MSR instruction, ensuring that instructions after the ISB execute use the new stack pointer. See the *Cortex™-M3/M4 Instruction Set Technical User's Manual*.

Control Register (CONTROL)

Type R/W, reset 0x0000.0000

	31	30	29	28	27	26	25	24	23	22	21	20	19	18	17	16
	reserved															
Type	RO	RO	RO	RO	RO	RO	RO	RO	RO	RO	RO	RO	RO	RO	RO	RO
Reset	0	0	0	0	0	0	0	0	0	0	0	0	0	0	0	0

	15	14	13	12	11	10	9	8	7	6	5	4	3	2	1	0
	reserved														ASP	TMPL
Type	RO	RO	RO	RO	RO	RO	RO	RO	RO	RO	RO	RO	RO	RO	R/W	R/W
Reset	0	0	0	0	0	0	0	0	0	0	0	0	0	0	0	0

Bit/Field	Name	Type	Reset	Description
31:2	reserved	RO	0x0000.000	Software should not rely on the value of a reserved bit. To provide compatibility with future products, the value of a reserved bit should be preserved across a read-modify-write operation.
1	ASP	R/W	0	Active Stack Pointer Value Description 1 **PSP** is the current stack pointer. 0 **MSP** is the current stack pointer In Handler mode, this bit reads as zero and ignores writes. The Cortex-M3 updates this bit automatically on exception return.
0	TMPL	R/W	0	Thread Mode Privilege Level Value Description 1 Unprivileged software can be executed in Thread mode. 0 Only privileged software can be executed in Thread mode.

2.3.5 Exceptions and Interrupts

The Cortex-M3 processor supports interrupts and system exceptions. The processor and the Nested Vectored Interrupt Controller (NVIC) prioritize and handle all exceptions. An exception changes the normal flow of software control. The processor uses Handler mode to handle all exceptions except for reset. See “Exception Entry and Return” on page 79 for more information.

The NVIC registers control interrupt handling. See “Nested Vectored Interrupt Controller (NVIC)” on page 89 for more information.

2.3.6 Data Types

The Cortex-M3 supports 32-bit words, 16-bit halfwords, and 8-bit bytes. The processor also supports 64-bit data transfer instructions. All instruction and data memory accesses are little endian. See “Memory Regions, Types and Attributes” on page 67 for more information.

2.4 Memory Model

This section describes the processor memory map, the behavior of memory accesses, and the bit-banding features. The processor has a fixed memory map that provides up to 4 GB of addressable memory.

The memory map for the LM3S2911 controller is provided in Table 2-4 on page 65. In this manual, register addresses are given as a hexadecimal increment, relative to the module’s base address as shown in the memory map.

The regions for SRAM and peripherals include bit-band regions. Bit-banding provides atomic operations to bit data (see “Bit-Banding” on page 69).

The processor reserves regions of the Private peripheral bus (PPB) address range for core peripheral registers (see “Cortex-M3 Peripherals” on page 88).

Note: Within the memory map, all reserved space returns a bus fault when read or written.

Table 2-4. Memory Map

Start	End	Description	For details, see page ...
Memory			
0x0000.0000	0x0003.FFFF	On-chip Flash	253
0x0004.0000	0x1FFF.FFFF	Reserved	-
0x2000.0000	0x2000.FFFF	Bit-banded on-chip SRAM	252
0x2001.0000	0x21FF.FFFF	Reserved	-
0x2200.0000	0x221F.FFFF	Bit-band alias of bit-banded on-chip SRAM starting at 0x2000.0000	252
0x2220.0000	0x3FFF.FFFF	Reserved	-
FiRM Peripherals			
0x4000.0000	0x4000.0FFF	Watchdog timer 0	366
0x4000.1000	0x4000.3FFF	Reserved	-
0x4000.4000	0x4000.4FFF	GPIO Port A	291
0x4000.5000	0x4000.5FFF	GPIO Port B	291
0x4000.6000	0x4000.6FFF	GPIO Port C	291
0x4000.7000	0x4000.7FFF	GPIO Port D	291
0x4000.8000	0x4000.8FFF	SSI0	442

Table 2-4. Memory Map *(continued)*

Start	End	Description	For details, see page ...
0x4000.9000	0x4000.9FFF	SSI1	442
0x4000.A000	0x4000.BFFF	Reserved	-
0x4000.C000	0x4000.CFFF	UART0	396
0x4000.D000	0x4000.DFFF	UART1	396
0x4000.E000	0x4000.EFFF	UART2	396
0x4000.F000	0x4001.FFFF	Reserved	-
Peripherals			
0x4002.0000	0x4002.0FFF	I^2C 0	483
0x4002.1000	0x4002.1FFF	I^2C 1	483
0x4002.2000	0x4002.3FFF	Reserved	-
0x4002.4000	0x4002.4FFF	GPIO Port E	291
0x4002.5000	0x4002.5FFF	GPIO Port F	291
0x4002.6000	0x4002.6FFF	GPIO Port G	291
0x4002.7000	0x4002.7FFF	GPIO Port H	291
0x4002.8000	0x4002.FFFF	Reserved	-
0x4003.0000	0x4003.0FFF	Timer 0	338
0x4003.1000	0x4003.1FFF	Timer 1	338
0x4003.2000	0x4003.2FFF	Timer 2	338
0x4003.3000	0x4003.3FFF	Timer 3	338
0x4003.4000	0x4003.BFFF	Reserved	-
0x4003.C000	0x4003.CFFF	Analog Comparators	552
0x4003.D000	0x4003.FFFF	Reserved	-
0x4004.0000	0x4004.0FFF	CAN0 Controller	526
0x4004.1000	0x400F.BFFF	Reserved	-
0x400F.C000	0x400F.CFFF	Hibernation Module	239
0x400F.D000	0x400F.DFFF	Flash memory control	257
0x400F.E000	0x400F.EFFF	System control	179
0x400F.F000	0x41FF.FFFF	Reserved	-
0x4200.0000	0x43FF.FFFF	Bit-banded alias of 0x4000.0000 through 0x400F.FFFF	-
0x4400.0000	0xDFFF.FFFF	Reserved	-
Private Peripheral Bus			
0xE000.0000	0xE000.0FFF	Instrumentation Trace Macrocell (ITM)	48
0xE000.1000	0xE000.1FFF	Data Watchpoint and Trace (DWT)	48
0xE000.2000	0xE000.2FFF	Flash Patch and Breakpoint (FPB)	48
0xE000.3000	0xE000.DFFF	Reserved	-
0xE000.E000	0xE000.EFFF	Cortex-M3 Peripherals (SysTick, NVIC, MPU and SCB)	96
0xE000.F000	0xE003.FFFF	Reserved	-
0xE004.0000	0xE004.0FFF	Trace Port Interface Unit (TPIU)	49
0xE004.1000	0xFFFF.FFFF	Reserved	-

2.4.1 Memory Regions, Types and Attributes

The memory map and the programming of the MPU split the memory map into regions. Each region has a defined memory type, and some regions have additional memory attributes. The memory type and attributes determine the behavior of accesses to the region.

The memory types are:

- Normal: The processor can re-order transactions for efficiency and perform speculative reads.
- Device: The processor preserves transaction order relative to other transactions to Device or Strongly Ordered memory.
- Strongly Ordered: The processor preserves transaction order relative to all other transactions.

The different ordering requirements for Device and Strongly Ordered memory mean that the memory system can buffer a write to Device memory but must not buffer a write to Strongly Ordered memory.

An additional memory attribute is Execute Never (XN), which means the processor prevents instruction accesses. A fault exception is generated only on execution of an instruction executed from an XN region.

2.4.2 Memory System Ordering of Memory Accesses

For most memory accesses caused by explicit memory access instructions, the memory system does not guarantee that the order in which the accesses complete matches the program order of the instructions, providing the order does not affect the behavior of the instruction sequence. Normally, if correct program execution depends on two memory accesses completing in program order, software must insert a memory barrier instruction between the memory access instructions (see “Software Ordering of Memory Accesses” on page 68).

However, the memory system does guarantee ordering of accesses to Device and Strongly Ordered memory. For two memory access instructions A1 and A2, if both A1 and A2 are accesses to either Device or Strongly Ordered memory, and if A1 occurs before A2 in program order, A1 is always observed before A2.

2.4.3 Behavior of Memory Accesses

Table 2-5 on page 67 shows the behavior of accesses to each region in the memory map. See “Memory Regions, Types and Attributes” on page 67 for more information on memory types and the XN attribute. Stellaris devices may have reserved memory areas within the address ranges shown below (refer to Table 2-4 on page 65 for more information).

Table 2-5. Memory Access Behavior

Address Range	Memory Region	Memory Type	Execute Never (XN)	Description
0x0000.0000 - 0x1FFF.FFFF	Code	Normal	-	This executable region is for program code. Data can also be stored here.
0x2000.0000 - 0x3FFF.FFFF	SRAM	Normal	-	This executable region is for data. Code can also be stored here. This region includes bit band and bit band alias areas (see Table 2-6 on page 69).
0x4000.0000 - 0x5FFF.FFFF	Peripheral	Device	XN	This region includes bit band and bit band alias areas (see Table 2-7 on page 70).
0x6000.0000 - 0x9FFF.FFFF	External RAM	Normal	-	This executable region is for data.

Table 2-5. Memory Access Behavior *(continued)*

Address Range	Memory Region	Memory Type	Execute Never (XN)	Description
0xA000.0000 - 0xDFFF.FFFF	External device	Device	XN	This region is for external device memory.
0xE000.0000- 0xE00F.FFFF	Private peripheral bus	Strongly Ordered	XN	This region includes the NVIC, system timer, and system control block.
0xE010.0000- 0xFFFF.FFFF	Reserved	-	-	-

The Code, SRAM, and external RAM regions can hold programs. However, it is recommended that programs always use the Code region because the Cortex-M3 has separate buses that can perform instruction fetches and data accesses simultaneously.

The MPU can override the default memory access behavior described in this section. For more information, see “Memory Protection Unit (MPU)” on page 91.

The Cortex-M3 prefetches instructions ahead of execution and speculatively prefetches from branch target addresses.

2.4.4 Software Ordering of Memory Accesses

The order of instructions in the program flow does not always guarantee the order of the corresponding memory transactions for the following reasons:

- The processor can reorder some memory accesses to improve efficiency, providing this does not affect the behavior of the instruction sequence.
- The processor has multiple bus interfaces.
- Memory or devices in the memory map have different wait states.
- Some memory accesses are buffered or speculative.

“Memory System Ordering of Memory Accesses” on page 67 describes the cases where the memory system guarantees the order of memory accesses. Otherwise, if the order of memory accesses is critical, software must include memory barrier instructions to force that ordering. The Cortex-M3 has the following memory barrier instructions:

- The Data Memory Barrier (`DMB`) instruction ensures that outstanding memory transactions complete before subsequent memory transactions.
- The Data Synchronization Barrier (`DSB`) instruction ensures that outstanding memory transactions complete before subsequent instructions execute.
- The Instruction Synchronization Barrier (`ISB`) instruction ensures that the effect of all completed memory transactions is recognizable by subsequent instructions.

Memory barrier instructions can be used in the following situations:

- MPU programming
  - If the MPU settings are changed and the change must be effective on the very next instruction, use a `DSB` instruction to ensure the effect of the MPU takes place immediately at the end of context switching.

– Use an ISB instruction to ensure the new MPU setting takes effect immediately after programming the MPU region or regions, if the MPU configuration code was accessed using a branch or call. If the MPU configuration code is entered using exception mechanisms, then an ISB instruction is not required.

- Vector table

  If the program changes an entry in the vector table and then enables the corresponding exception, use a DMB instruction between the operations. The DMB instruction ensures that if the exception is taken immediately after being enabled, the processor uses the new exception vector.

- Self-modifying code

  If a program contains self-modifying code, use an ISB instruction immediately after the code modification in the program. The ISB instruction ensures subsequent instruction execution uses the updated program.

- Memory map switching

  If the system contains a memory map switching mechanism, use a DSB instruction after switching the memory map in the program. The DSB instruction ensures subsequent instruction execution uses the updated memory map.

- Dynamic exception priority change

  When an exception priority has to change when the exception is pending or active, use DSB instructions after the change. The change then takes effect on completion of the DSB instruction.

Memory accesses to Strongly Ordered memory, such as the System Control Block, do not require the use of DMB instructions.

For more information on the memory barrier instructions, see the *Cortex™-M3/M4 Instruction Set Technical User's Manual*.

2.4.5 Bit-Banding

A bit-band region maps each word in a bit-band alias region to a single bit in the bit-band region. The bit-band regions occupy the lowest 1 MB of the SRAM and peripheral memory regions. Accesses to the 32-MB SRAM alias region map to the 1-MB SRAM bit-band region, as shown in Table 2-6 on page 69. Accesses to the 32-MB peripheral alias region map to the 1-MB peripheral bit-band region, as shown in Table 2-7 on page 70. For the specific address range of the bit-band regions, see Table 2-4 on page 65.

Note: A word access to the SRAM or the peripheral bit-band alias region maps to a single bit in the SRAM or peripheral bit-band region.

A word access to a bit band address results in a word access to the underlying memory, and similarly for halfword and byte accesses. This allows bit band accesses to match the access requirements of the underlying peripheral.

Table 2-6. SRAM Memory Bit-Banding Regions

Address Range	Memory Region	Instruction and Data Accesses
0x2000.0000 - 0x200F.FFFF	SRAM bit-band region	Direct accesses to this memory range behave as SRAM memory accesses, but this region is also bit addressable through bit-band alias.

Table 2-6. SRAM Memory Bit-Banding Regions *(continued)*

Address Range	Memory Region	Instruction and Data Accesses
0x2200.0000 - 0x23FF.FFFF	SRAM bit-band alias	Data accesses to this region are remapped to bit band region. A write operation is performed as read-modify-write. Instruction accesses are not remapped.

Table 2-7. Peripheral Memory Bit-Banding Regions

Address Range	Memory Region	Instruction and Data Accesses
0x4000.0000 - 0x400F.FFFF	Peripheral bit-band region	Direct accesses to this memory range behave as peripheral memory accesses, but this region is also bit addressable through bit-band alias.
0x4200.0000 - 0x43FF.FFFF	Peripheral bit-band alias	Data accesses to this region are remapped to bit band region. A write operation is performed as read-modify-write. Instruction accesses are not permitted.

The following formula shows how the alias region maps onto the bit-band region:

```
bit_word_offset = (byte_offset x 32) + (bit_number x 4)
```

```
bit_word_addr = bit_band_base + bit_word_offset
```

where:

bit_word_offset
: The position of the target bit in the bit-band memory region.

bit_word_addr
: The address of the word in the alias memory region that maps to the targeted bit.

bit_band_base
: The starting address of the alias region.

byte_offset
: The number of the byte in the bit-band region that contains the targeted bit.

bit_number
: The bit position, 0-7, of the targeted bit.

Figure 2-4 on page 71 shows examples of bit-band mapping between the SRAM bit-band alias region and the SRAM bit-band region:

- The alias word at 0x23FF.FFE0 maps to bit 0 of the bit-band byte at 0x200F.FFFF:

  ```
  0x23FF.FFE0 = 0x2200.0000 + (0x000F.FFFF*32) + (0*4)
  ```

- The alias word at 0x23FF.FFFC maps to bit 7 of the bit-band byte at 0x200F.FFFF:

  ```
  0x23FF.FFFC = 0x2200.0000 + (0x000F.FFFF*32) + (7*4)
  ```

- The alias word at 0x2200.0000 maps to bit 0 of the bit-band byte at 0x2000.0000:

  ```
  0x2200.0000 = 0x2200.0000 + (0*32) + (0*4)
  ```

- The alias word at 0x2200.001C maps to bit 7 of the bit-band byte at 0x2000.0000:

```
0x2200.001C = 0x2200.0000+ (0*32) + (7*4)
```

Figure 2-4. Bit-Band Mapping

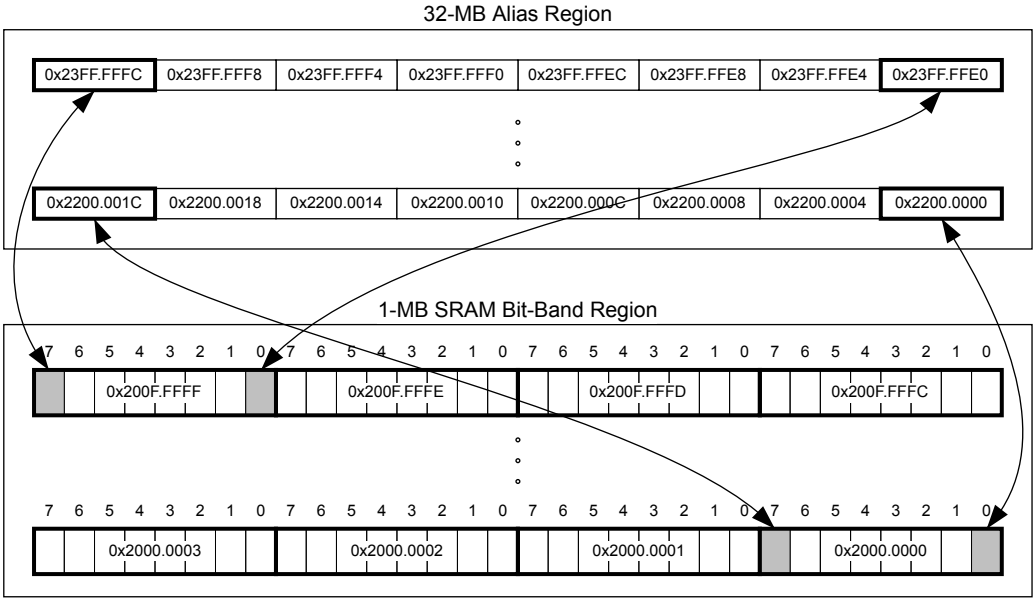

2.4.5.1 Directly Accessing an Alias Region

Writing to a word in the alias region updates a single bit in the bit-band region.

Bit 0 of the value written to a word in the alias region determines the value written to the targeted bit in the bit-band region. Writing a value with bit 0 set writes a 1 to the bit-band bit, and writing a value with bit 0 clear writes a 0 to the bit-band bit.

Bits 31:1 of the alias word have no effect on the bit-band bit. Writing 0x01 has the same effect as writing 0xFF. Writing 0x00 has the same effect as writing 0x0E.

When reading a word in the alias region, 0x0000.0000 indicates that the targeted bit in the bit-band region is clear and 0x0000.0001 indicates that the targeted bit in the bit-band region is set.

2.4.5.2 Directly Accessing a Bit-Band Region

“Behavior of Memory Accesses” on page 67 describes the behavior of direct byte, halfword, or word accesses to the bit-band regions.

2.4.6 Data Storage

The processor views memory as a linear collection of bytes numbered in ascending order from zero. For example, bytes 0-3 hold the first stored word, and bytes 4-7 hold the second stored word. Data is stored in little-endian format, with the least-significant byte (lsbyte) of a word stored at the lowest-numbered byte, and the most-significant byte (msbyte) stored at the highest-numbered byte. Figure 2-5 on page 72 illustrates how data is stored.

Figure 2-5. Data Storage

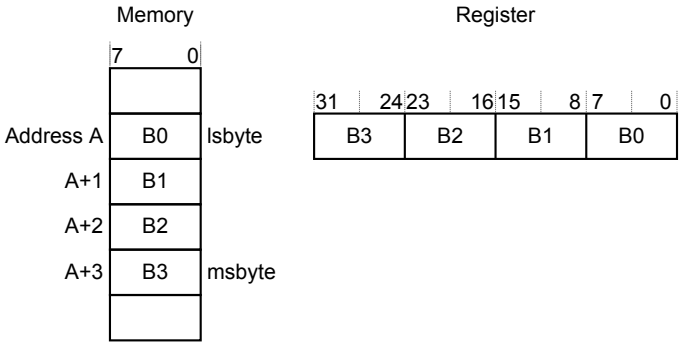

2.4.7 Synchronization Primitives

The Cortex-M3 instruction set includes pairs of synchronization primitives which provide a non-blocking mechanism that a thread or process can use to obtain exclusive access to a memory location. Software can use these primitives to perform a guaranteed read-modify-write memory update sequence or for a semaphore mechanism.

A pair of synchronization primitives consists of:

- A Load-Exclusive instruction, which is used to read the value of a memory location and requests exclusive access to that location.
- A Store-Exclusive instruction, which is used to attempt to write to the same memory location and returns a status bit to a register. If this status bit is clear, it indicates that the thread or process gained exclusive access to the memory and the write succeeds; if this status bit is set, it indicates that the thread or process did not gain exclusive access to the memory and no write was performed.

The pairs of Load-Exclusive and Store-Exclusive instructions are:

- The word instructions `LDREX` and `STREX`
- The halfword instructions `LDREXH` and `STREXH`
- The byte instructions `LDREXB` and `STREXB`

Software must use a Load-Exclusive instruction with the corresponding Store-Exclusive instruction.

To perform an exclusive read-modify-write of a memory location, software must:

1. Use a Load-Exclusive instruction to read the value of the location.
2. Modify the value, as required.
3. Use a Store-Exclusive instruction to attempt to write the new value back to the memory location.
4. Test the returned status bit.

   If the status bit is clear, the read-modify-write completed successfully. If the status bit is set, no write was performed, which indicates that the value returned at step 1 might be out of date. The software must retry the entire read-modify-write sequence.

Software can use the synchronization primitives to implement a semaphore as follows:

1. Use a Load-Exclusive instruction to read from the semaphore address to check whether the semaphore is free.
2. If the semaphore is free, use a Store-Exclusive to write the claim value to the semaphore address.
3. If the returned status bit from step 2 indicates that the Store-Exclusive succeeded, then the software has claimed the semaphore. However, if the Store-Exclusive failed, another process might have claimed the semaphore after the software performed step 1.

The Cortex-M3 includes an exclusive access monitor that tags the fact that the processor has executed a Load-Exclusive instruction. The processor removes its exclusive access tag if:

- It executes a `CLREX` instruction.
- It executes a Store-Exclusive instruction, regardless of whether the write succeeds.
- An exception occurs, which means the processor can resolve semaphore conflicts between different threads.

For more information about the synchronization primitive instructions, see the *Cortex™-M3/M4 Instruction Set Technical User's Manual*.

2.5 Exception Model

The ARM Cortex-M3 processor and the Nested Vectored Interrupt Controller (NVIC) prioritize and handle all exceptions in Handler Mode. The processor state is automatically stored to the stack on an exception and automatically restored from the stack at the end of the Interrupt Service Routine (ISR). The vector is fetched in parallel to the state saving, enabling efficient interrupt entry. The processor supports tail-chaining, which enables back-to-back interrupts to be performed without the overhead of state saving and restoration.

Table 2-8 on page 75 lists all exception types. Software can set eight priority levels on seven of these exceptions (system handlers) as well as on 30 interrupts (listed in Table 2-9 on page 76).

Priorities on the system handlers are set with the NVIC **System Handler Priority n (SYSPRIn)** registers. Interrupts are enabled through the NVIC **Interrupt Set Enable n (ENn)** register and prioritized with the NVIC **Interrupt Priority n (PRIn)** registers. Priorities can be grouped by splitting priority levels into preemption priorities and subpriorities. All the interrupt registers are described in "Nested Vectored Interrupt Controller (NVIC)" on page 89.

Internally, the highest user-programmable priority (0) is treated as fourth priority, after a Reset, Non-Maskable Interrupt (NMI), and a Hard Fault, in that order. Note that 0 is the default priority for all the programmable priorities.

Important: After a write to clear an interrupt source, it may take several processor cycles for the NVIC to see the interrupt source de-assert. Thus if the interrupt clear is done as the last action in an interrupt handler, it is possible for the interrupt handler to complete while the NVIC sees the interrupt as still asserted, causing the interrupt handler to be re-entered errantly. This situation can be avoided by either clearing the interrupt source at the beginning of the interrupt handler or by performing a read or write after the write to clear the interrupt source (and flush the write buffer).

See "Nested Vectored Interrupt Controller (NVIC)" on page 89 for more information on exceptions and interrupts.

2.5.1 Exception States

Each exception is in one of the following states:

- **Inactive.** The exception is not active and not pending.
- **Pending.** The exception is waiting to be serviced by the processor. An interrupt request from a peripheral or from software can change the state of the corresponding interrupt to pending.
- **Active.** An exception that is being serviced by the processor but has not completed.

  Note: An exception handler can interrupt the execution of another exception handler. In this case, both exceptions are in the active state.
- **Active and Pending.** The exception is being serviced by the processor, and there is a pending exception from the same source.

2.5.2 Exception Types

The exception types are:

- **Reset.** Reset is invoked on power up or a warm reset. The exception model treats reset as a special form of exception. When reset is asserted, the operation of the processor stops, potentially at any point in an instruction. When reset is deasserted, execution restarts from the address provided by the reset entry in the vector table. Execution restarts as privileged execution in Thread mode.
- **NMI.** A non-maskable Interrupt (NMI) can be signaled using the NMI signal or triggered by software using the **Interrupt Control and State (INTCTRL)** register. This exception has the highest priority other than reset. NMI is permanently enabled and has a fixed priority of -2. NMIs cannot be masked or prevented from activation by any other exception or preempted by any exception other than reset.
- **Hard Fault.** A hard fault is an exception that occurs because of an error during exception processing, or because an exception cannot be managed by any other exception mechanism. Hard faults have a fixed priority of -1, meaning they have higher priority than any exception with configurable priority.
- **Memory Management Fault.** A memory management fault is an exception that occurs because of a memory protection related fault, including access violation and no match. The MPU or the fixed memory protection constraints determine this fault, for both instruction and data memory transactions. This fault is used to abort instruction accesses to Execute Never (XN) memory regions, even if the MPU is disabled.
- **Bus Fault.** A bus fault is an exception that occurs because of a memory-related fault for an instruction or data memory transaction such as a prefetch fault or a memory access fault. This fault can be enabled or disabled.
- **Usage Fault.** A usage fault is an exception that occurs because of a fault related to instruction execution, such as:
  - An undefined instruction
  - An illegal unaligned access
  - Invalid state on instruction execution

– An error on exception return

An unaligned address on a word or halfword memory access or division by zero can cause a usage fault when the core is properly configured.

- **SVCall.** A supervisor call (SVC) is an exception that is triggered by the SVC instruction. In an OS environment, applications can use SVC instructions to access OS kernel functions and device drivers.
- **Debug Monitor.** This exception is caused by the debug monitor (when not halting). This exception is only active when enabled. This exception does not activate if it is a lower priority than the current activation.
- **PendSV.** PendSV is a pendable, interrupt-driven request for system-level service. In an OS environment, use PendSV for context switching when no other exception is active. PendSV is triggered using the **Interrupt Control and State (INTCTRL)** register.
- **SysTick.** A SysTick exception is an exception that the system timer generates when it reaches zero when it is enabled to generate an interrupt. Software can also generate a SysTick exception using the **Interrupt Control and State (INTCTRL)** register. In an OS environment, the processor can use this exception as system tick.
- **Interrupt (IRQ).** An interrupt, or IRQ, is an exception signaled by a peripheral or generated by a software request and fed through the NVIC (prioritized). All interrupts are asynchronous to instruction execution. In the system, peripherals use interrupts to communicate with the processor. Table 2-9 on page 76 lists the interrupts on the LM3S2911 controller.

For an asynchronous exception, other than reset, the processor can execute another instruction between when the exception is triggered and when the processor enters the exception handler.

Privileged software can disable the exceptions that Table 2-8 on page 75 shows as having configurable priority (see the **SYSHNDCTRL** register on page 130 and the **DIS0** register on page 105).

For more information about hard faults, memory management faults, bus faults, and usage faults, see “Fault Handling” on page 81.

Table 2-8. Exception Types

Exception Type	Vector Number	Priority[a]	Vector Address or Offset[b]	Activation
-	0	-	0x0000.0000	Stack top is loaded from the first entry of the vector table on reset.
Reset	1	-3 (highest)	0x0000.0004	Asynchronous
Non-Maskable Interrupt (NMI)	2	-2	0x0000.0008	Asynchronous
Hard Fault	3	-1	0x0000.000C	-
Memory Management	4	programmable[c]	0x0000.0010	Synchronous
Bus Fault	5	programmable[c]	0x0000.0014	Synchronous when precise and asynchronous when imprecise
Usage Fault	6	programmable[c]	0x0000.0018	Synchronous
-	7-10	-	-	Reserved
SVCall	11	programmable[c]	0x0000.002C	Synchronous
Debug Monitor	12	programmable[c]	0x0000.0030	Synchronous
-	13	-	-	Reserved

Table 2-8. Exception Types *(continued)*

Exception Type	Vector Number	Priority[a]	Vector Address or Offset[b]	Activation
PendSV	14	programmable[c]	0x0000.0038	Asynchronous
SysTick	15	programmable[c]	0x0000.003C	Asynchronous
Interrupts	16 and above	programmable[d]	0x0000.0040 and above	Asynchronous

a. 0 is the default priority for all the programmable priorities.

b. See “Vector Table” on page 77.

c. See **SYSPRI1** on page 127.

d. See **PRIn** registers on page 113.

Table 2-9. Interrupts

Vector Number	Interrupt Number (Bit in Interrupt Registers)	Vector Address or Offset	Description
0-15	-	0x0000.0000 - 0x0000.003C	Processor exceptions
16	0	0x0000.0040	GPIO Port A
17	1	0x0000.0044	GPIO Port B
18	2	0x0000.0048	GPIO Port C
19	3	0x0000.004C	GPIO Port D
20	4	0x0000.0050	GPIO Port E
21	5	0x0000.0054	UART0
22	6	0x0000.0058	UART1
23	7	0x0000.005C	SSI0
24	8	0x0000.0060	I^2C0
25-33	9-17	-	Reserved
34	18	0x0000.0088	Watchdog Timer 0
35	19	0x0000.008C	Timer 0A
36	20	0x0000.0090	Timer 0B
37	21	0x0000.0094	Timer 1A
38	22	0x0000.0098	Timer 1B
39	23	0x0000.009C	Timer 2A
40	24	0x0000.00A0	Timer 2B
41	25	0x0000.00A4	Analog Comparator 0
42	26	0x0000.00A8	Analog Comparator 1
43	27	-	Reserved
44	28	0x0000.00B0	System Control
45	29	0x0000.00B4	Flash Memory Control
46	30	0x0000.00B8	GPIO Port F
47	31	0x0000.00BC	GPIO Port G
48	32	0x0000.00C0	GPIO Port H
49	33	0x0000.00C4	UART2
50	34	0x0000.00C8	SSI1
51	35	0x0000.00CC	Timer 3A
52	36	0x0000.00D0	Timer 3B

Table 2-9. Interrupts *(continued)*

Vector Number	Interrupt Number (Bit in Interrupt Registers)	Vector Address or Offset	Description
53	37	0x0000.00D4	I^2C1
54	38	-	Reserved
55	39	0x0000.00DC	CAN0
56-58	40-42	-	Reserved
59	43	0x0000.00EC	Hibernation Module

2.5.3 Exception Handlers

The processor handles exceptions using:

- **Interrupt Service Routines (ISRs).** Interrupts (IRQx) are the exceptions handled by ISRs.
- **Fault Handlers.** Hard fault, memory management fault, usage fault, and bus fault are fault exceptions handled by the fault handlers.
- **System Handlers.** NMI, PendSV, SVCall, SysTick, and the fault exceptions are all system exceptions that are handled by system handlers.

2.5.4 Vector Table

The vector table contains the reset value of the stack pointer and the start addresses, also called exception vectors, for all exception handlers. The vector table is constructed using the vector address or offset shown in Table 2-8 on page 75. Figure 2-6 on page 78 shows the order of the exception vectors in the vector table. The least-significant bit of each vector must be 1, indicating that the exception handler is Thumb code

Figure 2-6. Vector Table

Exception number	IRQ number	Offset	Vector
59	43	0x00EC	IRQ43
.		.	.
.		.	.
.		.	.
		0x004C	
18	2	0x0048	IRQ2
17	1	0x0044	IRQ1
16	0	0x0040	IRQ0
15	-1	0x003C	Systick
14	-2	0x0038	PendSV
13			Reserved
12			Reserved for Debug
11	-5	0x002C	SVCall
10			Reserved
9			
8			
7			
6	-10	0x0018	Usage fault
5	-11	0x0014	Bus fault
4	-12	0x0010	Memory management fault
3	-13	0x000C	Hard fault
2	-14	0x0008	NMI
1		0x0004	Reset
		0x0000	Initial SP value

On system reset, the vector table is fixed at address 0x0000.0000. Privileged software can write to the **Vector Table Offset (VTABLE)** register to relocate the vector table start address to a different memory location, in the range 0x0000.0100 to 0x3FFF.FF00 (see “Vector Table” on page 77). Note that when configuring the **VTABLE** register, the offset must be aligned on a 256-byte boundary.

2.5.5 Exception Priorities

As Table 2-8 on page 75 shows, all exceptions have an associated priority, with a lower priority value indicating a higher priority and configurable priorities for all exceptions except Reset, Hard fault, and NMI. If software does not configure any priorities, then all exceptions with a configurable priority have a priority of 0. For information about configuring exception priorities, see page 127 and page 113.

Note: Configurable priority values for the Stellaris implementation are in the range 0-7. This means that the Reset, Hard fault, and NMI exceptions, with fixed negative priority values, always have higher priority than any other exception.

For example, assigning a higher priority value to IRQ[0] and a lower priority value to IRQ[1] means that IRQ[1] has higher priority than IRQ[0]. If both IRQ[1] and IRQ[0] are asserted, IRQ[1] is processed before IRQ[0].

If multiple pending exceptions have the same priority, the pending exception with the lowest exception number takes precedence. For example, if both IRQ[0] and IRQ[1] are pending and have the same priority, then IRQ[0] is processed before IRQ[1].

When the processor is executing an exception handler, the exception handler is preempted if a higher priority exception occurs. If an exception occurs with the same priority as the exception being handled, the handler is not preempted, irrespective of the exception number. However, the status of the new interrupt changes to pending.

2.5.6 Interrupt Priority Grouping

To increase priority control in systems with interrupts, the NVIC supports priority grouping. This grouping divides each interrupt priority register entry into two fields:

- An upper field that defines the group priority
- A lower field that defines a subpriority within the group

Only the group priority determines preemption of interrupt exceptions. When the processor is executing an interrupt exception handler, another interrupt with the same group priority as the interrupt being handled does not preempt the handler.

If multiple pending interrupts have the same group priority, the subpriority field determines the order in which they are processed. If multiple pending interrupts have the same group priority and subpriority, the interrupt with the lowest IRQ number is processed first.

For information about splitting the interrupt priority fields into group priority and subpriority, see page 121.

2.5.7 Exception Entry and Return

Descriptions of exception handling use the following terms:

- **Preemption.** When the processor is executing an exception handler, an exception can preempt the exception handler if its priority is higher than the priority of the exception being handled. See “Interrupt Priority Grouping” on page 79 for more information about preemption by an interrupt. When one exception preempts another, the exceptions are called nested exceptions. See “Exception Entry” on page 80 more information.
- **Return.** Return occurs when the exception handler is completed, and there is no pending exception with sufficient priority to be serviced and the completed exception handler was not handling a late-arriving exception. The processor pops the stack and restores the processor state to the state it had before the interrupt occurred. See “Exception Return” on page 81 for more information.
- **Tail-Chaining.** This mechanism speeds up exception servicing. On completion of an exception handler, if there is a pending exception that meets the requirements for exception entry, the stack pop is skipped and control transfers to the new exception handler.
- **Late-Arriving.** This mechanism speeds up preemption. If a higher priority exception occurs during state saving for a previous exception, the processor switches to handle the higher priority exception and initiates the vector fetch for that exception. State saving is not affected by late arrival because the state saved is the same for both exceptions. Therefore, the state saving continues uninterrupted. The processor can accept a late arriving exception until the first instruction of the exception handler of the original exception enters the execute stage of the processor. On

return from the exception handler of the late-arriving exception, the normal tail-chaining rules apply.

2.5.7.1 Exception Entry

Exception entry occurs when there is a pending exception with sufficient priority and either the processor is in Thread mode or the new exception is of higher priority than the exception being handled, in which case the new exception preempts the original exception.

When one exception preempts another, the exceptions are nested.

Sufficient priority means the exception has more priority than any limits set by the mask registers (see **PRIMASK** on page 61, **FAULTMASK** on page 62, and **BASEPRI** on page 63). An exception with less priority than this is pending but is not handled by the processor.

When the processor takes an exception, unless the exception is a tail-chained or a late-arriving exception, the processor pushes information onto the current stack. This operation is referred to as *stacking* and the structure of eight data words is referred to as *stack frame*.

Figure 2-7. Exception Stack Frame

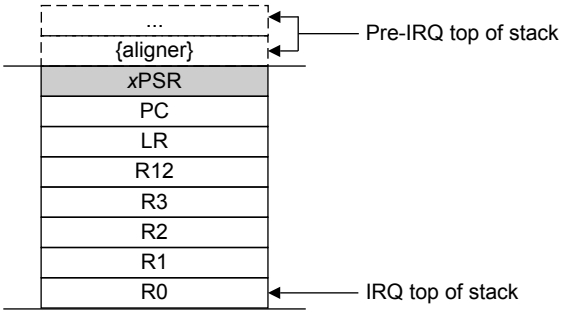

Immediately after stacking, the stack pointer indicates the lowest address in the stack frame. Unless stack alignment is disabled, the stack frame is aligned to a double-word address. If the `STKALIGN` bit of the **Configuration Control (CCR)** register is set, stack align adjustment is performed during stacking.

The stack frame includes the return address, which is the address of the next instruction in the interrupted program. This value is restored to the **PC** at exception return so that the interrupted program resumes.

In parallel to the stacking operation, the processor performs a vector fetch that reads the exception handler start address from the vector table. When stacking is complete, the processor starts executing the exception handler. At the same time, the processor writes an EXC_RETURN value to the **LR**, indicating which stack pointer corresponds to the stack frame and what operation mode the processor was in before the entry occurred.

If no higher-priority exception occurs during exception entry, the processor starts executing the exception handler and automatically changes the status of the corresponding pending interrupt to active.

If another higher-priority exception occurs during exception entry, known as late arrival, the processor starts executing the exception handler for this exception and does not change the pending status of the earlier exception.

2.5.7.2 Exception Return

Exception return occurs when the processor is in Handler mode and executes one of the following instructions to load the EXC_RETURN value into the **PC**:

- An `LDM` or `POP` instruction that loads the **PC**
- A `BX` instruction using any register
- An `LDR` instruction with the **PC** as the destination

EXC_RETURN is the value loaded into the **LR** on exception entry. The exception mechanism relies on this value to detect when the processor has completed an exception handler. The lowest four bits of this value provide information on the return stack and processor mode. Table 2-10 on page 81 shows the EXC_RETURN values with a description of the exception return behavior.

EXC_RETURN bits 31:4 are all set. When this value is loaded into the **PC**, it indicates to the processor that the exception is complete, and the processor initiates the appropriate exception return sequence.

Table 2-10. Exception Return Behavior

EXC_RETURN[31:0]	Description
0xFFFF.FFF0	Reserved
0xFFFF.FFF1	Return to Handler mode. Exception return uses state from **MSP**. Execution uses **MSP** after return.
0xFFFF.FFF2 - 0xFFFF.FFF8	Reserved
0xFFFF.FFF9	Return to Thread mode. Exception return uses state from **MSP**. Execution uses **MSP** after return.
0xFFFF.FFFA - 0xFFFF.FFFC	Reserved
0xFFFF.FFFD	Return to Thread mode. Exception return uses state from **PSP**. Execution uses **PSP** after return.
0xFFFF.FFFE - 0xFFFF.FFFF	Reserved

2.6 Fault Handling

Faults are a subset of the exceptions (see “Exception Model” on page 73). The following conditions generate a fault:

- A bus error on an instruction fetch or vector table load or a data access.
- An internally detected error such as an undefined instruction or an attempt to change state with a `BX` instruction.
- Attempting to execute an instruction from a memory region marked as Non-Executable (XN).
- An MPU fault because of a privilege violation or an attempt to access an unmanaged region.

2.6.1 Fault Types

Table 2-11 on page 82 shows the types of fault, the handler used for the fault, the corresponding fault status register, and the register bit that indicates the fault has occurred. See page 134 for more information about the fault status registers.

Table 2-11. Faults

Fault	Handler	Fault Status Register	Bit Name
Bus error on a vector read	Hard fault	**Hard Fault Status (HFAULTSTAT)**	VECT
Fault escalated to a hard fault	Hard fault	**Hard Fault Status (HFAULTSTAT)**	FORCED
MPU or default memory mismatch on instruction access	Memory management fault	**Memory Management Fault Status (MFAULTSTAT)**	IERR [a]
MPU or default memory mismatch on data access	Memory management fault	**Memory Management Fault Status (MFAULTSTAT)**	DERR
MPU or default memory mismatch on exception stacking	Memory management fault	**Memory Management Fault Status (MFAULTSTAT)**	MSTKE
MPU or default memory mismatch on exception unstacking	Memory management fault	**Memory Management Fault Status (MFAULTSTAT)**	MUSTKE
Bus error during exception stacking	Bus fault	**Bus Fault Status (BFAULTSTAT)**	BSTKE
Bus error during exception unstacking	Bus fault	**Bus Fault Status (BFAULTSTAT)**	BUSTKE
Bus error during instruction prefetch	Bus fault	**Bus Fault Status (BFAULTSTAT)**	IBUS
Precise data bus error	Bus fault	**Bus Fault Status (BFAULTSTAT)**	PRECISE
Imprecise data bus error	Bus fault	**Bus Fault Status (BFAULTSTAT)**	IMPRE
Attempt to access a coprocessor	Usage fault	**Usage Fault Status (UFAULTSTAT)**	NOCP
Undefined instruction	Usage fault	**Usage Fault Status (UFAULTSTAT)**	UNDEF
Attempt to enter an invalid instruction set state [b]	Usage fault	**Usage Fault Status (UFAULTSTAT)**	INVSTAT
Invalid EXC_RETURN value	Usage fault	**Usage Fault Status (UFAULTSTAT)**	INVPC
Illegal unaligned load or store	Usage fault	**Usage Fault Status (UFAULTSTAT)**	UNALIGN
Divide by 0	Usage fault	**Usage Fault Status (UFAULTSTAT)**	DIV0

a. Occurs on an access to an XN region even if the MPU is disabled.

b. Attempting to use an instruction set other than the Thumb instruction set, or returning to a non load-store-multiple instruction with ICI continuation.

2.6.2 Fault Escalation and Hard Faults

All fault exceptions except for hard fault have configurable exception priority (see **SYSPRI1** on page 127). Software can disable execution of the handlers for these faults (see **SYSHNDCTRL** on page 130).

Usually, the exception priority, together with the values of the exception mask registers, determines whether the processor enters the fault handler, and whether a fault handler can preempt another fault handler as described in “Exception Model” on page 73.

In some situations, a fault with configurable priority is treated as a hard fault. This process is called priority escalation, and the fault is described as *escalated to hard fault*. Escalation to hard fault occurs when:

- A fault handler causes the same kind of fault as the one it is servicing. This escalation to hard fault occurs because a fault handler cannot preempt itself because it must have the same priority as the current priority level.

- A fault handler causes a fault with the same or lower priority as the fault it is servicing. This situation happens because the handler for the new fault cannot preempt the currently executing fault handler.
- An exception handler causes a fault for which the priority is the same as or lower than the currently executing exception.
- A fault occurs and the handler for that fault is not enabled.

If a bus fault occurs during a stack push when entering a bus fault handler, the bus fault does not escalate to a hard fault. Thus if a corrupted stack causes a fault, the fault handler executes even though the stack push for the handler failed. The fault handler operates but the stack contents are corrupted.

Note: Only Reset and NMI can preempt the fixed priority hard fault. A hard fault can preempt any exception other than Reset, NMI, or another hard fault.

2.6.3 Fault Status Registers and Fault Address Registers

The fault status registers indicate the cause of a fault. For bus faults and memory management faults, the fault address register indicates the address accessed by the operation that caused the fault, as shown in Table 2-12 on page 83.

Table 2-12. Fault Status and Fault Address Registers

Handler	Status Register Name	Address Register Name	Register Description
Hard fault	**Hard Fault Status (HFAULTSTAT)**	-	page 140
Memory management fault	**Memory Management Fault Status (MFAULTSTAT)**	**Memory Management Fault Address (MMADDR)**	page 134 page 141
Bus fault	**Bus Fault Status (BFAULTSTAT)**	**Bus Fault Address (FAULTADDR)**	page 134 page 142
Usage fault	**Usage Fault Status (UFAULTSTAT)**	-	page 134

2.6.4 Lockup

The processor enters a lockup state if a hard fault occurs when executing the NMI or hard fault handlers. When the processor is in the lockup state, it does not execute any instructions. The processor remains in lockup state until it is reset, an NMI occurs, or it is halted by a debugger.

Note: If the lockup state occurs from the NMI handler, a subsequent NMI does not cause the processor to leave the lockup state.

2.7 Power Management

The Cortex-M3 processor sleep modes reduce power consumption:

- Sleep mode stops the processor clock.
- Deep-sleep mode stops the system clock and switches off the PLL and Flash memory.

The SLEEPDEEP bit of the **System Control (SYSCTRL)** register selects which sleep mode is used (see page 123). For more information about the behavior of the sleep modes, see “System Control” on page 176.

This section describes the mechanisms for entering sleep mode and the conditions for waking up from sleep mode, both of which apply to Sleep mode and Deep-sleep mode.

2.7.1 Entering Sleep Modes

This section describes the mechanisms software can use to put the processor into one of the sleep modes.

The system can generate spurious wake-up events, for example a debug operation wakes up the processor. Therefore, software must be able to put the processor back into sleep mode after such an event. A program might have an idle loop to put the processor back to sleep mode.

2.7.1.1 Wait for Interrupt

The wait for interrupt instruction, `WFI`, causes immediate entry to sleep mode unless the wake-up condition is true (see “Wake Up from WFI or Sleep-on-Exit” on page 84). When the processor executes a `WFI` instruction, it stops executing instructions and enters sleep mode. See the *Cortex™-M3/M4 Instruction Set Technical User's Manual* for more information.

2.7.1.2 Wait for Event

The wait for event instruction, `WFE`, causes entry to sleep mode conditional on the value of a one-bit event register. When the processor executes a `WFE` instruction, it checks the event register. If the register is 0, the processor stops executing instructions and enters sleep mode. If the register is 1, the processor clears the register and continues executing instructions without entering sleep mode.

If the event register is 1, the processor must not enter sleep mode on execution of a `WFE` instruction. Typically, this situation occurs if an `SEV` instruction has been executed. Software cannot access this register directly.

See the *Cortex™-M3/M4 Instruction Set Technical User's Manual* for more information.

2.7.1.3 Sleep-on-Exit

If the `SLEEPEXIT` bit of the **SYSCTRL** register is set, when the processor completes the execution of all exception handlers, it returns to Thread mode and immediately enters sleep mode. This mechanism can be used in applications that only require the processor to run when an exception occurs.

2.7.2 Wake Up from Sleep Mode

The conditions for the processor to wake up depend on the mechanism that cause it to enter sleep mode.

2.7.2.1 Wake Up from WFI or Sleep-on-Exit

Normally, the processor wakes up only when the NVIC detects an exception with sufficient priority to cause exception entry. Some embedded systems might have to execute system restore tasks after the processor wakes up and before executing an interrupt handler. Entry to the interrupt handler can be delayed by setting the `PRIMASK` bit and clearing the `FAULTMASK` bit. If an interrupt arrives that is enabled and has a higher priority than current exception priority, the processor wakes up but does not execute the interrupt handler until the processor clears `PRIMASK`. For more information about **PRIMASK** and **FAULTMASK**, see page 61 and page 62.

2.7.2.2 Wake Up from WFE

The processor wakes up if it detects an exception with sufficient priority to cause exception entry.

In addition, if the SEVONPEND bit in the **SYSCTRL** register is set, any new pending interrupt triggers an event and wakes up the processor, even if the interrupt is disabled or has insufficient priority to cause exception entry. For more information about **SYSCTRL**, see page 123.

2.8 Instruction Set Summary

The processor implements a version of the Thumb instruction set. Table 2-13 on page 85 lists the supported instructions.

Note: In Table 2-13 on page 85:

- Angle brackets, <>, enclose alternative forms of the operand
- Braces, {}, enclose optional operands
- The Operands column is not exhaustive
- Op2 is a flexible second operand that can be either a register or a constant
- Most instructions can use an optional condition code suffix

For more information on the instructions and operands, see the instruction descriptions in the *Cortex™-M3/M4 Instruction Set Technical User's Manual*.

Table 2-13. Cortex-M3 Instruction Summary

Mnemonic	Operands	Brief Description	Flags
ADC, ADCS	{Rd,} Rn, Op2	Add with carry	N,Z,C,V
ADD, ADDS	{Rd,} Rn, Op2	Add	N,Z,C,V
ADD, ADDW	{Rd,} Rn , #imm12	Add	N,Z,C,V
ADR	Rd, label	Load PC-relative address	-
AND, ANDS	{Rd,} Rn, Op2	Logical AND	N,Z,C
ASR, ASRS	Rd, Rm, <Rs|#n>	Arithmetic shift right	N,Z,C
B	label	Branch	-
BFC	Rd, #lsb, #width	Bit field clear	-
BFI	Rd, Rn, #lsb, #width	Bit field insert	-
BIC, BICS	{Rd,} Rn, Op2	Bit clear	N,Z,C
BKPT	#imm	Breakpoint	-
BL	label	Branch with link	-
BLX	Rm	Branch indirect with link	-
BX	Rm	Branch indirect	-
CBNZ	Rn, label	Compare and branch if non-zero	-
CBZ	Rn, label	Compare and branch if zero	-
CLREX	-	Clear exclusive	-
CLZ	Rd, Rm	Count leading zeros	-
CMN	Rn, Op2	Compare negative	N,Z,C,V
CMP	Rn, Op2	Compare	N,Z,C,V
CPSID	i	Change processor state, disable interrupts	-
CPSIE	i	Change processor state, enable interrupts	-
DMB	-	Data memory barrier	-
DSB	-	Data synchronization barrier	-

Table 2-13. Cortex-M3 Instruction Summary *(continued)*

Mnemonic	Operands	Brief Description	Flags
EOR, EORS	{Rd,} Rn, Op2	Exclusive OR	N,Z,C
ISB	-	Instruction synchronization barrier	-
IT	-	If-Then condition block	-
LDM	Rn{!}, reglist	Load multiple registers, increment after	-
LDMDB, LDMEA	Rn{!}, reglist	Load multiple registers, decrement before	-
LDMFD, LDMIA	Rn{!}, reglist	Load multiple registers, increment after	-
LDR	Rt, [Rn, #offset]	Load register with word	-
LDRB, LDRBT	Rt, [Rn, #offset]	Load register with byte	-
LDRD	Rt, Rt2, [Rn, #offset]	Load register with two bytes	-
LDREX	Rt, [Rn, #offset]	Load register exclusive	-
LDREXB	Rt, [Rn]	Load register exclusive with byte	-
LDREXH	Rt, [Rn]	Load register exclusive with halfword	-
LDRH, LDRHT	Rt, [Rn, #offset]	Load register with halfword	-
LDRSB, LDRSBT	Rt, [Rn, #offset]	Load register with signed byte	-
LDRSH, LDRSHT	Rt, [Rn, #offset]	Load register with signed halfword	-
LDRT	Rt, [Rn, #offset]	Load register with word	-
LSL, LSLS	Rd, Rm, <Rs|#n>	Logical shift left	N,Z,C
LSR, LSRS	Rd, Rm, <Rs|#n>	Logical shift right	N,Z,C
MLA	Rd, Rn, Rm, Ra	Multiply with accumulate, 32-bit result	-
MLS	Rd, Rn, Rm, Ra	Multiply and subtract, 32-bit result	-
MOV, MOVS	Rd, Op2	Move	N,Z,C
MOV, MOVW	Rd, #imm16	Move 16-bit constant	N,Z,C
MOVT	Rd, #imm16	Move top	-
MRS	Rd, spec_reg	Move from special register to general register	-
MSR	spec_reg, Rm	Move from general register to special register	N,Z,C,V
MUL, MULS	{Rd,} Rn, Rm	Multiply, 32-bit result	N,Z
MVN, MVNS	Rd, Op2	Move NOT	N,Z,C
NOP	-	No operation	-
ORN, ORNS	{Rd,} Rn, Op2	Logical OR NOT	N,Z,C
ORR, ORRS	{Rd,} Rn, Op2	Logical OR	N,Z,C
POP	reglist	Pop registers from stack	-
PUSH	reglist	Push registers onto stack	-
RBIT	Rd, Rn	Reverse bits	-
REV	Rd, Rn	Reverse byte order in a word	-
REV16	Rd, Rn	Reverse byte order in each halfword	-
REVSH	Rd, Rn	Reverse byte order in bottom halfword and sign extend	-
ROR, RORS	Rd, Rm, <Rs|#n>	Rotate right	N,Z,C
RRX, RRXS	Rd, Rm	Rotate right with extend	N,Z,C

Table 2-13. Cortex-M3 Instruction Summary *(continued)*

Mnemonic	Operands	Brief Description	Flags
RSB, RSBS	{Rd,} Rn, Op2	Reverse subtract	N,Z,C,V
SBC, SBCS	{Rd,} Rn, Op2	Subtract with carry	N,Z,C,V
SBFX	Rd, Rn, #lsb, #width	Signed bit field extract	-
SDIV	{Rd,} Rn, Rm	Signed divide	-
SEV	-	Send event	-
SMLAL	RdLo, RdHi, Rn, Rm	Signed multiply with accumulate (32x32+64), 64-bit result	-
SMULL	RdLo, RdHi, Rn, Rm	Signed multiply (32x32), 64-bit result	-
SSAT	Rd, #n, Rm {,shift #s}	Signed saturate	Q
STM	Rn{!}, reglist	Store multiple registers, increment after	-
STMDB, STMEA	Rn{!}, reglist	Store multiple registers, decrement before	-
STMFD, STMIA	Rn{!}, reglist	Store multiple registers, increment after	-
STR	Rt, [Rn {, #offset}]	Store register word	-
STRB, STRBT	Rt, [Rn {, #offset}]	Store register byte	-
STRD	Rt, Rt2, [Rn {, #offset}]	Store register two words	-
STREX	Rt, Rt, [Rn {, #offset}]	Store register exclusive	-
STREXB	Rd, Rt, [Rn]	Store register exclusive byte	-
STREXH	Rd, Rt, [Rn]	Store register exclusive halfword	-
STRH, STRHT	Rt, [Rn {, #offset}]	Store register halfword	-
STRSB, STRSBT	Rt, [Rn {, #offset}]	Store register signed byte	-
STRSH, STRSHT	Rt, [Rn {, #offset}]	Store register signed halfword	-
STRT	Rt, [Rn {, #offset}]	Store register word	-
SUB, SUBS	{Rd,} Rn, Op2	Subtract	N,Z,C,V
SUB, SUBW	{Rd,} Rn, #imm12	Subtract 12-bit constant	N,Z,C,V
SVC	#imm	Supervisor call	-
SXTB	{Rd,} Rm {,ROR #n}	Sign extend a byte	-
SXTH	{Rd,} Rm {,ROR #n}	Sign extend a halfword	-
TBB	[Rn, Rm]	Table branch byte	-
TBH	[Rn, Rm, LSL #1]	Table branch halfword	-
TEQ	Rn, Op2	Test equivalence	N,Z,C
TST	Rn, Op2	Test	N,Z,C
UBFX	Rd, Rn, #lsb, #width	Unsigned bit field extract	-
UDIV	{Rd,} Rn, Rm	Unsigned divide	-
UMLAL	RdLo, RdHi, Rn, Rm	Unsigned multiply with accumulate (32x32+32+32), 64-bit result	-
UMULL	RdLo, RdHi, Rn, Rm	Unsigned multiply (32x 2), 64-bit result	-
USAT	Rd, #n, Rm {,shift #s}	Unsigned Saturate	Q
UXTB	{Rd,} Rm, {,ROR #n}	Zero extend a Byte	-
UXTH	{Rd,} Rm, {,ROR #n}	Zero extend a Halfword	-
WFE	-	Wait for event	-
WFI	-	Wait for interrupt	-

3 Cortex-M3 Peripherals

This chapter provides information on the Stellaris® implementation of the Cortex-M3 processor peripherals, including:

- SysTick (see page 88)

  Provides a simple, 24-bit clear-on-write, decrementing, wrap-on-zero counter with a flexible control mechanism.

- Nested Vectored Interrupt Controller (NVIC) (see page 89)
  - Facilitates low-latency exception and interrupt handling
  - Controls power management
  - Implements system control registers

- System Control Block (SCB) (see page 91)

  Provides system implementation information and system control, including configuration, control, and reporting of system exceptions.

- Memory Protection Unit (MPU) (see page 91)

  Supports the standard ARMv7 Protected Memory System Architecture (PMSA) model. The MPU provides full support for protection regions, overlapping protection regions, access permissions, and exporting memory attributes to the system.

Table 3-1 on page 88 shows the address map of the Private Peripheral Bus (PPB). Some peripheral register regions are split into two address regions, as indicated by two addresses listed.

Table 3-1. Core Peripheral Register Regions

Address	Core Peripheral	Description (see page ...)
0xE000.E010-0xE000.E01F	System Timer	88
0xE000.E100-0xE000.E4EF 0xE000.EF00-0xE000.EF03	Nested Vectored Interrupt Controller	89
0xE000.ED00-0xE000.ED3F	System Control Block	91
0xE000.ED90-0xE000.EDB8	Memory Protection Unit	91

3.1 Functional Description

This chapter provides information on the Stellaris implementation of the Cortex-M3 processor peripherals: SysTick, NVIC, SCB and MPU.

3.1.1 System Timer (SysTick)

Cortex-M3 includes an integrated system timer, SysTick, which provides a simple, 24-bit clear-on-write, decrementing, wrap-on-zero counter with a flexible control mechanism. The counter can be used in several different ways, for example as:

- An RTOS tick timer that fires at a programmable rate (for example, 100 Hz) and invokes a SysTick routine.

- A high-speed alarm timer using the system clock.

- A variable rate alarm or signal timer—the duration is range-dependent on the reference clock used and the dynamic range of the counter.
- A simple counter used to measure time to completion and time used.
- An internal clock source control based on missing/meeting durations. The `COUNT` bit in the **STCTRL** control and status register can be used to determine if an action completed within a set duration, as part of a dynamic clock management control loop.

The timer consists of three registers:

- **SysTick Control and Status (STCTRL)**: A control and status counter to configure its clock, enable the counter, enable the SysTick interrupt, and determine counter status.
- **SysTick Reload Value (STRELOAD)**: The reload value for the counter, used to provide the counter's wrap value.
- **SysTick Current Value (STCURRENT)**: The current value of the counter.

When enabled, the timer counts down on each clock from the reload value to zero, reloads (wraps) to the value in the **STRELOAD** register on the next clock edge, then decrements on subsequent clocks. Clearing the **STRELOAD** register disables the counter on the next wrap. When the counter reaches zero, the `COUNT` status bit is set. The `COUNT` bit clears on reads.

Writing to the **STCURRENT** register clears the register and the `COUNT` status bit. The write does not trigger the SysTick exception logic. On a read, the current value is the value of the register at the time the register is accessed.

The SysTick counter runs on the system clock. If this clock signal is stopped for low power mode, the SysTick counter stops. Ensure software uses aligned word accesses to access the SysTick registers.

Note: When the processor is halted for debugging, the counter does not decrement.

3.1.2 Nested Vectored Interrupt Controller (NVIC)

This section describes the Nested Vectored Interrupt Controller (NVIC) and the registers it uses. The NVIC supports:

- 30 interrupts.
- A programmable priority level of 0-7 for each interrupt. A higher level corresponds to a lower priority, so level 0 is the highest interrupt priority.
- Low-latency exception and interrupt handling.
- Level and pulse detection of interrupt signals.
- Dynamic reprioritization of interrupts.
- Grouping of priority values into group priority and subpriority fields.
- Interrupt tail-chaining.
- An external Non-maskable interrupt (NMI).

The processor automatically stacks its state on exception entry and unstacks this state on exception exit, with no instruction overhead, providing low latency exception handling.

3.1.2.1 Level-Sensitive and Pulse Interrupts

The processor supports both level-sensitive and pulse interrupts. Pulse interrupts are also described as edge-triggered interrupts.

A level-sensitive interrupt is held asserted until the peripheral deasserts the interrupt signal. Typically this happens because the ISR accesses the peripheral, causing it to clear the interrupt request. A pulse interrupt is an interrupt signal sampled synchronously on the rising edge of the processor clock. To ensure the NVIC detects the interrupt, the peripheral must assert the interrupt signal for at least one clock cycle, during which the NVIC detects the pulse and latches the interrupt.

When the processor enters the ISR, it automatically removes the pending state from the interrupt (see “Hardware and Software Control of Interrupts” on page 90 for more information). For a level-sensitive interrupt, if the signal is not deasserted before the processor returns from the ISR, the interrupt becomes pending again, and the processor must execute its ISR again. As a result, the peripheral can hold the interrupt signal asserted until it no longer needs servicing.

3.1.2.2 Hardware and Software Control of Interrupts

The Cortex-M3 latches all interrupts. A peripheral interrupt becomes pending for one of the following reasons:

- The NVIC detects that the interrupt signal is High and the interrupt is not active.
- The NVIC detects a rising edge on the interrupt signal.
- Software writes to the corresponding interrupt set-pending register bit, or to the **Software Trigger Interrupt (SWTRIG)** register to make a Software-Generated Interrupt pending. See the `INT` bit in the **PEND0** register on page 107 or **SWTRIG** on page 115.

A pending interrupt remains pending until one of the following:

- The processor enters the ISR for the interrupt, changing the state of the interrupt from pending to active. Then:
  - For a level-sensitive interrupt, when the processor returns from the ISR, the NVIC samples the interrupt signal. If the signal is asserted, the state of the interrupt changes to pending, which might cause the processor to immediately re-enter the ISR. Otherwise, the state of the interrupt changes to inactive.
  - For a pulse interrupt, the NVIC continues to monitor the interrupt signal, and if this is pulsed the state of the interrupt changes to pending and active. In this case, when the processor returns from the ISR the state of the interrupt changes to pending, which might cause the processor to immediately re-enter the ISR.

    If the interrupt signal is not pulsed while the processor is in the ISR, when the processor returns from the ISR the state of the interrupt changes to inactive.
- Software writes to the corresponding interrupt clear-pending register bit
  - For a level-sensitive interrupt, if the interrupt signal is still asserted, the state of the interrupt does not change. Otherwise, the state of the interrupt changes to inactive.

– For a pulse interrupt, the state of the interrupt changes to inactive, if the state was pending or to active, if the state was active and pending.

3.1.3 System Control Block (SCB)

The System Control Block (SCB) provides system implementation information and system control, including configuration, control, and reporting of the system exceptions.

3.1.4 Memory Protection Unit (MPU)

This section describes the Memory protection unit (MPU). The MPU divides the memory map into a number of regions and defines the location, size, access permissions, and memory attributes of each region. The MPU supports independent attribute settings for each region, overlapping regions, and export of memory attributes to the system.

The memory attributes affect the behavior of memory accesses to the region. The Cortex-M3 MPU defines eight separate memory regions, 0-7, and a background region.

When memory regions overlap, a memory access is affected by the attributes of the region with the highest number. For example, the attributes for region 7 take precedence over the attributes of any region that overlaps region 7.

The background region has the same memory access attributes as the default memory map, but is accessible from privileged software only.

The Cortex-M3 MPU memory map is unified, meaning that instruction accesses and data accesses have the same region settings.

If a program accesses a memory location that is prohibited by the MPU, the processor generates a memory management fault, causing a fault exception and possibly causing termination of the process in an OS environment. In an OS environment, the kernel can update the MPU region setting dynamically based on the process to be executed. Typically, an embedded OS uses the MPU for memory protection.

Configuration of MPU regions is based on memory types (see “Memory Regions, Types and Attributes” on page 67 for more information).

Table 3-2 on page 91 shows the possible MPU region attributes. See the section called “MPU Configuration for a Stellaris Microcontroller” on page 95 for guidelines for programming a microcontroller implementation.

Table 3-2. Memory Attributes Summary

Memory Type	Description
Strongly Ordered	All accesses to Strongly Ordered memory occur in program order.
Device	Memory-mapped peripherals
Normal	Normal memory

To avoid unexpected behavior, disable the interrupts before updating the attributes of a region that the interrupt handlers might access.

Ensure software uses aligned accesses of the correct size to access MPU registers:

- Except for the **MPU Region Attribute and Size (MPUATTR)** register, all MPU registers must be accessed with aligned word accesses.
- The **MPUATTR** register can be accessed with byte or aligned halfword or word accesses.

The processor does not support unaligned accesses to MPU registers.

When setting up the MPU, and if the MPU has previously been programmed, disable unused regions to prevent any previous region settings from affecting the new MPU setup.

3.1.4.1 Updating an MPU Region

To update the attributes for an MPU region, the **MPU Region Number (MPUNUMBER)**, **MPU Region Base Address (MPUBASE)** and **MPUATTR** registers must be updated. Each register can be programmed separately or with a multiple-word write to program all of these registers. You can use the **MPUBASEx** and **MPUATTRx** aliases to program up to four regions simultaneously using an `STM` instruction.

Updating an MPU Region Using Separate Words

This example simple code configures one region:

```
; R1 = region number
; R2 = size/enable
; R3 = attributes
; R4 = address
LDR R0,=MPUNUMBER        ; 0xE000ED98, MPU region number register
STR R1, [R0, #0x0]       ; Region Number
STR R4, [R0, #0x4]       ; Region Base Address
STRH R2, [R0, #0x8]      ; Region Size and Enable
STRH R3, [R0, #0xA]      ; Region Attribute
```

Disable a region before writing new region settings to the MPU if you have previously enabled the region being changed. For example:

```
; R1 = region number
; R2 = size/enable
; R3 = attributes
; R4 = address
LDR R0,=MPUNUMBER         ; 0xE000ED98, MPU region number register
STR R1, [R0, #0x0]        ; Region Number
BIC R2, R2, #1            ; Disable
STRH R2, [R0, #0x8]       ; Region Size and Enable
STR R4, [R0, #0x4]        ; Region Base Address
STRH R3, [R0, #0xA]       ; Region Attribute
ORR R2, #1                ; Enable
STRH R2, [R0, #0x8]       ; Region Size and Enable
```

Software must use memory barrier instructions:

- Before MPU setup, if there might be outstanding memory transfers, such as buffered writes, that might be affected by the change in MPU settings.
- After MPU setup, if it includes memory transfers that must use the new MPU settings.

However, memory barrier instructions are not required if the MPU setup process starts by entering an exception handler, or is followed by an exception return, because the exception entry and exception return mechanism cause memory barrier behavior.

Software does not need any memory barrier instructions during MPU setup, because it accesses the MPU through the Private Peripheral Bus (PPB), which is a Strongly Ordered memory region.

For example, if all of the memory access behavior is intended to take effect immediately after the programming sequence, then a DSB instruction and an ISB instruction should be used. A DSB is required after changing MPU settings, such as at the end of context switch. An ISB is required if the code that programs the MPU region or regions is entered using a branch or call. If the programming sequence is entered using a return from exception, or by taking an exception, then an ISB is not required.

Updating an MPU Region Using Multi-Word Writes

The MPU can be programmed directly using multi-word writes, depending how the information is divided. Consider the following reprogramming:

```
; R1 = region number
; R2 = address
; R3 = size, attributes in one
LDR R0, =MPUNUMBER  ; 0xE000ED98, MPU region number register
STR R1, [R0, #0x0]  ; Region Number
STR R2, [R0, #0x4]  ; Region Base Address
STR R3, [R0, #0x8]  ; Region Attribute, Size and Enable
```

An STM instruction can be used to optimize this:

```
; R1 = region number
; R2 = address
; R3 = size, attributes in one
LDR R0, =MPUNUMBER  ; 0xE000ED98, MPU region number register
STM R0, {R1-R3}     ; Region number, address, attribute, size and enable
```

This operation can be done in two words for pre-packed information, meaning that the **MPU Region Base Address (MPUBASE)** register (see page 147) contains the required region number and has the VALID bit set. This method can be used when the data is statically packed, for example in a boot loader:

```
; R1 = address and region number in one
; R2 = size and attributes in one
LDR R0, =MPUBASE    ; 0xE000ED9C, MPU Region Base register
STR R1, [R0, #0x0]  ; Region base address and region number combined
                    ; with VALID (bit 4) set
STR R2, [R0, #0x4]  ; Region Attribute, Size and Enable
```

Subregions

Regions of 256 bytes or more are divided into eight equal-sized subregions. Set the corresponding bit in the SRD field of the **MPU Region Attribute and Size (MPUATTR)** register (see page 149) to disable a subregion. The least-significant bit of the SRD field controls the first subregion, and the most-significant bit controls the last subregion. Disabling a subregion means another region overlapping the disabled range matches instead. If no other enabled region overlaps the disabled subregion, the MPU issues a fault.

Regions of 32, 64, and 128 bytes do not support subregions. With regions of these sizes, the SRD field must be configured to 0x00, otherwise the MPU behavior is unpredictable.

Example of SRD Use

Two regions with the same base address overlap. Region one is 128 KB, and region two is 512 KB. To ensure the attributes from region one apply to the first 128 KB region, configure the SRD field for region two to 0x03 to disable the first two subregions, as Figure 3-1 on page 94 shows.

Figure 3-1. SRD Use Example

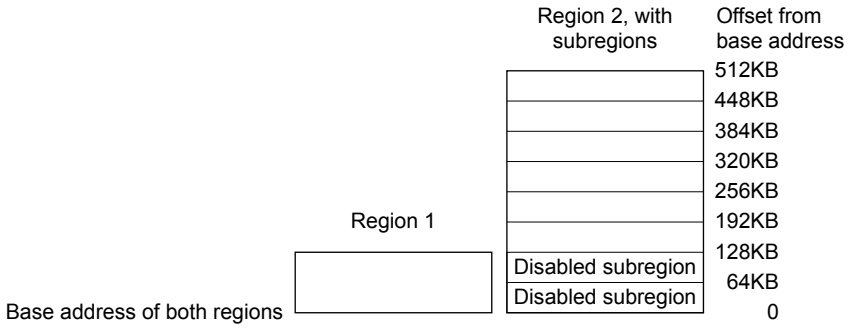

3.1.4.2 MPU Access Permission Attributes

The access permission bits, TEX, S, C, B, AP, and XN of the **MPUATTR** register, control access to the corresponding memory region. If an access is made to an area of memory without the required permissions, then the MPU generates a permission fault.

Table 3-3 on page 94 shows the encodings for the TEX, C, B, and S access permission bits. All encodings are shown for completeness, however the current implementation of the Cortex-M3 does not support the concept of cacheability or shareability. Refer to the section called “MPU Configuration for a Stellaris Microcontroller” on page 95 for information on programming the MPU for Stellaris implementations.

Table 3-3. TEX, S, C, and B Bit Field Encoding

TEX	S	C	B	Memory Type	Shareability	Other Attributes
000b	x[a]	0	0	Strongly Ordered	Shareable	-
000	x[a]	0	1	Device	Shareable	-
000	0	1	0	Normal	Not shareable	Outer and inner write-through. No write allocate.
000	1	1	0	Normal	Shareable	
000	0	1	1	Normal	Not shareable	
000	1	1	1	Normal	Shareable	
001	0	0	0	Normal	Not shareable	Outer and inner noncacheable.
001	1	0	0	Normal	Shareable	
001	x[a]	0	1	Reserved encoding	-	-
001	x[a]	1	0	Reserved encoding	-	-
001	0	1	1	Normal	Not shareable	Outer and inner write-back. Write and read allocate.
001	1	1	1	Normal	Shareable	
010	x[a]	0	0	Device	Not shareable	Nonshared Device.
010	x[a]	0	1	Reserved encoding	-	-
010	x[a]	1	x[a]	Reserved encoding	-	-

Table 3-3. TEX, S, C, and B Bit Field Encoding *(continued)*

TEX	S	C	B	Memory Type	Shareability	Other Attributes
1BB	0	A	A	Normal	Not shareable	Cached memory (BB = outer policy, AA = inner policy). See Table 3-4 for the encoding of the AA and BB bits.
1BB	1	A	A	Normal	Shareable	

a. The MPU ignores the value of this bit.

Table 3-4 on page 95 shows the cache policy for memory attribute encodings with a TEX value in the range of 0x4-0x7.

Table 3-4. Cache Policy for Memory Attribute Encoding

Encoding, AA or BB	Corresponding Cache Policy
00	Non-cacheable
01	Write back, write and read allocate
10	Write through, no write allocate
11	Write back, no write allocate

Table 3-5 on page 95 shows the AP encodings in the **MPUATTR** register that define the access permissions for privileged and unprivileged software.

Table 3-5. AP Bit Field Encoding

AP Bit Field	Privileged Permissions	Unprivileged Permissions	Description
000	No access	No access	All accesses generate a permission fault.
001	R/W	No access	Access from privileged software only.
010	R/W	RO	Writes by unprivileged software generate a permission fault.
011	R/W	R/W	Full access.
100	Unpredictable	Unpredictable	Reserved.
101	RO	No access	Reads by privileged software only.
110	RO	RO	Read-only, by privileged or unprivileged software.
111	RO	RO	Read-only, by privileged or unprivileged software.

MPU Configuration for a Stellaris Microcontroller

Stellaris microcontrollers have only a single processor and no caches. As a result, the MPU should be programmed as shown in Table 3-6 on page 95.

Table 3-6. Memory Region Attributes for Stellaris Microcontrollers

Memory Region	TEX	S	C	B	Memory Type and Attributes
Flash memory	000b	0	1	0	Normal memory, non-shareable, write-through
Internal SRAM	000b	1	1	0	Normal memory, shareable, write-through
External SRAM	000b	1	1	1	Normal memory, shareable, write-back, write-allocate
Peripherals	000b	1	0	1	Device memory, shareable

In current Stellaris microcontroller implementations, the shareability and cache policy attributes do not affect the system behavior. However, using these settings for the MPU regions can make the application code more portable. The values given are for typical situations.

3.1.4.3 MPU Mismatch

When an access violates the MPU permissions, the processor generates a memory management fault (see “Exceptions and Interrupts” on page 65 for more information). The **MFAULTSTAT** register indicates the cause of the fault. See page 134 for more information.

3.2 Register Map

Table 3-7 on page 96 lists the Cortex-M3 Peripheral SysTick, NVIC, MPU and SCB registers. The offset listed is a hexadecimal increment to the register's address, relative to the Core Peripherals base address of 0xE000.E000.

Note: Register spaces that are not used are reserved for future or internal use. Software should not modify any reserved memory address.

Table 3-7. Peripherals Register Map

Offset	Name	Type	Reset	Description	See page
System Timer (SysTick) Registers					
0x010	STCTRL	R/W	0x0000.0000	SysTick Control and Status Register	99
0x014	STRELOAD	R/W	0x0000.0000	SysTick Reload Value Register	101
0x018	STCURRENT	R/WC	0x0000.0000	SysTick Current Value Register	102
Nested Vectored Interrupt Controller (NVIC) Registers					
0x100	EN0	R/W	0x0000.0000	Interrupt 0-31 Set Enable	103
0x104	EN1	R/W	0x0000.0000	Interrupt 32-43 Set Enable	104
0x180	DIS0	R/W	0x0000.0000	Interrupt 0-31 Clear Enable	105
0x184	DIS1	R/W	0x0000.0000	Interrupt 32-43 Clear Enable	106
0x200	PEND0	R/W	0x0000.0000	Interrupt 0-31 Set Pending	107
0x204	PEND1	R/W	0x0000.0000	Interrupt 32-43 Set Pending	108
0x280	UNPEND0	R/W	0x0000.0000	Interrupt 0-31 Clear Pending	109
0x284	UNPEND1	R/W	0x0000.0000	Interrupt 32-43 Clear Pending	110
0x300	ACTIVE0	RO	0x0000.0000	Interrupt 0-31 Active Bit	111
0x304	ACTIVE1	RO	0x0000.0000	Interrupt 32-43 Active Bit	112
0x400	PRI0	R/W	0x0000.0000	Interrupt 0-3 Priority	113
0x404	PRI1	R/W	0x0000.0000	Interrupt 4-7 Priority	113
0x408	PRI2	R/W	0x0000.0000	Interrupt 8-11 Priority	113
0x40C	PRI3	R/W	0x0000.0000	Interrupt 12-15 Priority	113
0x410	PRI4	R/W	0x0000.0000	Interrupt 16-19 Priority	113

Table 3-7. Peripherals Register Map *(continued)*

Offset	Name	Type	Reset	Description	See page
0x414	PRI5	R/W	0x0000.0000	Interrupt 20-23 Priority	113
0x418	PRI6	R/W	0x0000.0000	Interrupt 24-27 Priority	113
0x41C	PRI7	R/W	0x0000.0000	Interrupt 28-31 Priority	113
0x420	PRI8	R/W	0x0000.0000	Interrupt 32-35 Priority	113
0x424	PRI9	R/W	0x0000.0000	Interrupt 36-39 Priority	113
0x428	PRI10	R/W	0x0000.0000	Interrupt 40-43 Priority	113
0xF00	SWTRIG	WO	0x0000.0000	Software Trigger Interrupt	115
System Control Block (SCB) Registers					
0xD00	CPUID	RO	0x411F.C231	CPU ID Base	116
0xD04	INTCTRL	R/W	0x0000.0000	Interrupt Control and State	117
0xD08	VTABLE	R/W	0x0000.0000	Vector Table Offset	120
0xD0C	APINT	R/W	0xFA05.0000	Application Interrupt and Reset Control	121
0xD10	SYSCTRL	R/W	0x0000.0000	System Control	123
0xD14	CFGCTRL	R/W	0x0000.0000	Configuration and Control	125
0xD18	SYSPRI1	R/W	0x0000.0000	System Handler Priority 1	127
0xD1C	SYSPRI2	R/W	0x0000.0000	System Handler Priority 2	128
0xD20	SYSPRI3	R/W	0x0000.0000	System Handler Priority 3	129
0xD24	SYSHNDCTRL	R/W	0x0000.0000	System Handler Control and State	130
0xD28	FAULTSTAT	R/W1C	0x0000.0000	Configurable Fault Status	134
0xD2C	HFAULTSTAT	R/W1C	0x0000.0000	Hard Fault Status	140
0xD34	MMADDR	R/W	-	Memory Management Fault Address	141
0xD38	FAULTADDR	R/W	-	Bus Fault Address	142
Memory Protection Unit (MPU) Registers					
0xD90	MPUTYPE	RO	0x0000.0800	MPU Type	143
0xD94	MPUCTRL	R/W	0x0000.0000	MPU Control	144
0xD98	MPUNUMBER	R/W	0x0000.0000	MPU Region Number	146
0xD9C	MPUBASE	R/W	0x0000.0000	MPU Region Base Address	147
0xDA0	MPUATTR	R/W	0x0000.0000	MPU Region Attribute and Size	149
0xDA4	MPUBASE1	R/W	0x0000.0000	MPU Region Base Address Alias 1	147
0xDA8	MPUATTR1	R/W	0x0000.0000	MPU Region Attribute and Size Alias 1	149
0xDAC	MPUBASE2	R/W	0x0000.0000	MPU Region Base Address Alias 2	147
0xDB0	MPUATTR2	R/W	0x0000.0000	MPU Region Attribute and Size Alias 2	149

Table 3-7. Peripherals Register Map *(continued)*

Offset	Name	Type	Reset	Description	See page
0xDB4	MPUBASE3	R/W	0x0000.0000	MPU Region Base Address Alias 3	147
0xDB8	MPUATTR3	R/W	0x0000.0000	MPU Region Attribute and Size Alias 3	149

3.3 System Timer (SysTick) Register Descriptions

This section lists and describes the System Timer registers, in numerical order by address offset.

Register 1: SysTick Control and Status Register (STCTRL), offset 0x010

Note: This register can only be accessed from privileged mode.

The SysTick **STCTRL** register enables the SysTick features.

SysTick Control and Status Register (STCTRL)

Base 0xE000.E000
Offset 0x010
Type R/W, reset 0x0000.0000

	31	30	29	28	27	26	25	24	23	22	21	20	19	18	17	16
	reserved															COUNT
Type	RO	RO	RO	RO	RO	RO	RO	RO	RO	RO	RO	RO	RO	RO	RO	RO
Reset	0	0	0	0	0	0	0	0	0	0	0	0	0	0	0	0

	15	14	13	12	11	10	9	8	7	6	5	4	3	2	1	0
	reserved													CLK_SRC	INTEN	ENABLE
Type	RO	RO	RO	RO	RO	RO	RO	RO	RO	RO	RO	RO	RO	R/W	R/W	R/W
Reset	0	0	0	0	0	0	0	0	0	0	0	0	0	0	0	0

Bit/Field	Name	Type	Reset	Description
31:17	reserved	RO	0x000	Software should not rely on the value of a reserved bit. To provide compatibility with future products, the value of a reserved bit should be preserved across a read-modify-write operation.
16	COUNT	RO	0	Count Flag Value — Description 0 — The SysTick timer has not counted to 0 since the last time this bit was read. 1 — The SysTick timer has counted to 0 since the last time this bit was read. This bit is cleared by a read of the register or if the **STCURRENT** register is written with any value. If read by the debugger using the DAP, this bit is cleared only if the `MasterType` bit in the **AHB-AP Control Register** is clear. Otherwise, the `COUNT` bit is not changed by the debugger read. See the *ARM® Debug Interface V5 Architecture Specification* for more information on `MasterType`.
15:3	reserved	RO	0x000	Software should not rely on the value of a reserved bit. To provide compatibility with future products, the value of a reserved bit should be preserved across a read-modify-write operation.
2	CLK_SRC	R/W	0	Clock Source Value — Description 0 — External reference clock. (Not implemented for most Stellaris microcontrollers.) 1 — System clock Because an external reference clock is not implemented, this bit must be set in order for SysTick to operate.

Bit/Field	Name	Type	Reset	Description
1	INTEN	R/W	0	Interrupt Enable

Value	Description
0	Interrupt generation is disabled. Software can use the `COUNT` bit to determine if the counter has ever reached 0.
1	An interrupt is generated to the NVIC when SysTick counts to 0.

Bit/Field	Name	Type	Reset	Description
0	ENABLE	R/W	0	Enable

Value	Description
0	The counter is disabled.
1	Enables SysTick to operate in a multi-shot way. That is, the counter loads the `RELOAD` value and begins counting down. On reaching 0, the `COUNT` bit is set and an interrupt is generated if enabled by `INTEN`. The counter then loads the `RELOAD` value again and begins counting.

Register 2: SysTick Reload Value Register (STRELOAD), offset 0x014

Note: This register can only be accessed from privileged mode.

The **STRELOAD** register specifies the start value to load into the **SysTick Current Value (STCURRENT)** register when the counter reaches 0. The start value can be between 0x1 and 0x00FF.FFFF. A start value of 0 is possible but has no effect because the SysTick interrupt and the COUNT bit are activated when counting from 1 to 0.

SysTick can be configured as a multi-shot timer, repeated over and over, firing every N+1 clock pulses, where N is any value from 1 to 0x00FF.FFFF. For example, if a tick interrupt is required every 100 clock pulses, 99 must be written into the RELOAD field.

SysTick Reload Value Register (STRELOAD)

Base 0xE000.E000
Offset 0x014
Type R/W, reset 0x0000.0000

	31	30	29	28	27	26	25	24	23	22	21	20	19	18	17	16
	reserved								RELOAD							
Type	RO	RO	RO	RO	RO	RO	RO	RO	R/W	R/W	R/W	R/W	R/W	R/W	R/W	R/W
Reset	0	0	0	0	0	0	0	0	0	0	0	0	0	0	0	0

	15	14	13	12	11	10	9	8	7	6	5	4	3	2	1	0
	RELOAD															
Type	R/W	R/W	R/W	R/W	R/W	R/W	R/W	R/W	R/W	R/W	R/W	R/W	R/W	R/W	R/W	R/W
Reset	0	0	0	0	0	0	0	0	0	0	0	0	0	0	0	0

Bit/Field	Name	Type	Reset	Description
31:24	reserved	RO	0x00	Software should not rely on the value of a reserved bit. To provide compatibility with future products, the value of a reserved bit should be preserved across a read-modify-write operation.
23:0	RELOAD	R/W	0x00.0000	Reload Value Value to load into the **SysTick Current Value (STCURRENT)** register when the counter reaches 0.

Register 3: SysTick Current Value Register (STCURRENT), offset 0x018

Note: This register can only be accessed from privileged mode.

The **STCURRENT** register contains the current value of the SysTick counter.

SysTick Current Value Register (STCURRENT)

Base 0xE000.E000
Offset 0x018
Type R/WC, reset 0x0000.0000

	31	30	29	28	27	26	25	24	23	22	21	20	19	18	17	16
	reserved								CURRENT							
Type	RO	RO	RO	RO	RO	RO	RO	RO	R/WC	R/WC	R/WC	R/WC	R/WC	R/WC	R/WC	R/WC
Reset	0	0	0	0	0	0	0	0	0	0	0	0	0	0	0	0

	15	14	13	12	11	10	9	8	7	6	5	4	3	2	1	0
	CURRENT															
Type	R/WC	R/WC	R/WC	R/WC	R/WC	R/WC	R/WC	R/WC	R/WC	R/WC	R/WC	R/WC	R/WC	R/WC	R/WC	R/WC
Reset	0	0	0	0	0	0	0	0	0	0	0	0	0	0	0	0

Bit/Field	Name	Type	Reset	Description
31:24	reserved	RO	0x00	Software should not rely on the value of a reserved bit. To provide compatibility with future products, the value of a reserved bit should be preserved across a read-modify-write operation.
23:0	CURRENT	R/WC	0x00.0000	Current Value This field contains the current value at the time the register is accessed. No read-modify-write protection is provided, so change with care. This register is write-clear. Writing to it with any value clears the register. Clearing this register also clears the `COUNT` bit of the **STCTRL** register.

3.4 NVIC Register Descriptions

This section lists and describes the NVIC registers, in numerical order by address offset.

The NVIC registers can only be fully accessed from privileged mode, but interrupts can be pended while in unprivileged mode by enabling the **Configuration and Control (CFGCTRL)** register. Any other unprivileged mode access causes a bus fault.

Ensure software uses correctly aligned register accesses. The processor does not support unaligned accesses to NVIC registers.

An interrupt can enter the pending state even if it is disabled.

Before programming the **VTABLE** register to relocate the vector table, ensure the vector table entries of the new vector table are set up for fault handlers, NMI, and all enabled exceptions such as interrupts. For more information, see page 120.

Register 4: Interrupt 0-31 Set Enable (EN0), offset 0x100

Note: This register can only be accessed from privileged mode.

The **EN0** register enables interrupts and shows which interrupts are enabled. Bit 0 corresponds to Interrupt 0; bit 31 corresponds to Interrupt 31.

See Table 2-9 on page 76 for interrupt assignments.

If a pending interrupt is enabled, the NVIC activates the interrupt based on its priority. If an interrupt is not enabled, asserting its interrupt signal changes the interrupt state to pending, but the NVIC never activates the interrupt, regardless of its priority.

Interrupt 0-31 Set Enable (EN0)

Base 0xE000.E000
Offset 0x100
Type R/W, reset 0x0000.0000

	31	30	29	28	27	26	25	24	23	22	21	20	19	18	17	16
	INT															
Type	R/W	R/W	R/W	R/W	R/W	R/W	R/W	R/W	R/W	R/W	R/W	R/W	R/W	R/W	R/W	R/W
Reset	0	0	0	0	0	0	0	0	0	0	0	0	0	0	0	0

	15	14	13	12	11	10	9	8	7	6	5	4	3	2	1	0
	INT															
Type	R/W	R/W	R/W	R/W	R/W	R/W	R/W	R/W	R/W	R/W	R/W	R/W	R/W	R/W	R/W	R/W
Reset	0	0	0	0	0	0	0	0	0	0	0	0	0	0	0	0

Bit/Field	Name	Type	Reset	Description
31:0	INT	R/W	0x0000.0000	Interrupt Enable

Value	Description
0	On a read, indicates the interrupt is disabled. On a write, no effect.
1	On a read, indicates the interrupt is enabled. On a write, enables the interrupt.

A bit can only be cleared by setting the corresponding `INT[n]` bit in the **DISn** register.

Register 5: Interrupt 32-43 Set Enable (EN1), offset 0x104

Note: This register can only be accessed from privileged mode.

The **EN1** register enables interrupts and shows which interrupts are enabled. Bit 0 corresponds to Interrupt 32; bit 11 corresponds to Interrupt 43. See Table 2-9 on page 76 for interrupt assignments.

If a pending interrupt is enabled, the NVIC activates the interrupt based on its priority. If an interrupt is not enabled, asserting its interrupt signal changes the interrupt state to pending, but the NVIC never activates the interrupt, regardless of its priority.

Interrupt 32-43 Set Enable (EN1)

Base 0xE000.E000
Offset 0x104
Type R/W, reset 0x0000.0000

	31	30	29	28	27	26	25	24	23	22	21	20	19	18	17	16
	reserved															
Type	RO	RO	RO	RO	RO	RO	RO	RO	RO	RO	RO	RO	RO	RO	RO	RO
Reset	0	0	0	0	0	0	0	0	0	0	0	0	0	0	0	0

	15	14	13	12	11	10	9	8	7	6	5	4	3	2	1	0
	reserved				INT											
Type	RO	RO	RO	RO	R/W	R/W	R/W	R/W	R/W	R/W	R/W	R/W	R/W	R/W	R/W	R/W
Reset	0	0	0	0	0	0	0	0	0	0	0	0	0	0	0	0

Bit/Field	Name	Type	Reset	Description
31:12	reserved	RO	0x0000.0	Software should not rely on the value of a reserved bit. To provide compatibility with future products, the value of a reserved bit should be preserved across a read-modify-write operation.
11:0	INT	R/W	0x000	Interrupt Enable

Value	Description
0	On a read, indicates the interrupt is disabled. On a write, no effect.
1	On a read, indicates the interrupt is enabled. On a write, enables the interrupt.

A bit can only be cleared by setting the corresponding `INT[n]` bit in the **DIS1** register.

Register 6: Interrupt 0-31 Clear Enable (DIS0), offset 0x180

Note: This register can only be accessed from privileged mode.

The **DIS0** register disables interrupts. Bit 0 corresponds to Interrupt 0; bit 31 corresponds to Interrupt 31.

See Table 2-9 on page 76 for interrupt assignments.

Interrupt 0-31 Clear Enable (DIS0)

Base 0xE000.E000
Offset 0x180
Type R/W, reset 0x0000.0000

	31	30	29	28	27	26	25	24	23	22	21	20	19	18	17	16
	INT															
Type	R/W	R/W	R/W	R/W	R/W	R/W	R/W	R/W	R/W	R/W	R/W	R/W	R/W	R/W	R/W	R/W
Reset	0	0	0	0	0	0	0	0	0	0	0	0	0	0	0	0

	15	14	13	12	11	10	9	8	7	6	5	4	3	2	1	0
	INT															
Type	R/W	R/W	R/W	R/W	R/W	R/W	R/W	R/W	R/W	R/W	R/W	R/W	R/W	R/W	R/W	R/W
Reset	0	0	0	0	0	0	0	0	0	0	0	0	0	0	0	0

Bit/Field	Name	Type	Reset	Description
31:0	INT	R/W	0x0000.0000	Interrupt Disable

Value	Description
0	On a read, indicates the interrupt is disabled. On a write, no effect.
1	On a read, indicates the interrupt is enabled. On a write, clears the corresponding `INT[n]` bit in the **EN0** register, disabling interrupt [n].

Register 7: Interrupt 32-43 Clear Enable (DIS1), offset 0x184

Note: This register can only be accessed from privileged mode.

The **DIS1** register disables interrupts. Bit 0 corresponds to Interrupt 32; bit 11 corresponds to Interrupt 43. See Table 2-9 on page 76 for interrupt assignments.

Interrupt 32-43 Clear Enable (DIS1)

Base 0xE000.E000
Offset 0x184
Type R/W, reset 0x0000.0000

	31	30	29	28	27	26	25	24	23	22	21	20	19	18	17	16
	reserved															
Type	RO	RO	RO	RO	RO	RO	RO	RO	RO	RO	RO	RO	RO	RO	RO	RO
Reset	0	0	0	0	0	0	0	0	0	0	0	0	0	0	0	0

	15	14	13	12	11	10	9	8	7	6	5	4	3	2	1	0
	reserved				INT											
Type	RO	RO	RO	RO	R/W	R/W	R/W	R/W	R/W	R/W	R/W	R/W	R/W	R/W	R/W	R/W
Reset	0	0	0	0	0	0	0	0	0	0	0	0	0	0	0	0

Bit/Field	Name	Type	Reset	Description
31:12	reserved	RO	0x0000.0	Software should not rely on the value of a reserved bit. To provide compatibility with future products, the value of a reserved bit should be preserved across a read-modify-write operation.
11:0	INT	R/W	0x000	Interrupt Disable

Value	Description
0	On a read, indicates the interrupt is disabled. On a write, no effect.
1	On a read, indicates the interrupt is enabled. On a write, clears the corresponding `INT[n]` bit in the **EN1** register, disabling interrupt [n].

Register 8: Interrupt 0-31 Set Pending (PEND0), offset 0x200

Note: This register can only be accessed from privileged mode.

The **PEND0** register forces interrupts into the pending state and shows which interrupts are pending. Bit 0 corresponds to Interrupt 0; bit 31 corresponds to Interrupt 31.

See Table 2-9 on page 76 for interrupt assignments.

Interrupt 0-31 Set Pending (PEND0)

Base 0xE000.E000
Offset 0x200
Type R/W, reset 0x0000.0000

	31	30	29	28	27	26	25	24	23	22	21	20	19	18	17	16
	INT															
Type	R/W	R/W	R/W	R/W	R/W	R/W	R/W	R/W	R/W	R/W	R/W	R/W	R/W	R/W	R/W	R/W
Reset	0	0	0	0	0	0	0	0	0	0	0	0	0	0	0	0

	15	14	13	12	11	10	9	8	7	6	5	4	3	2	1	0
	INT															
Type	R/W	R/W	R/W	R/W	R/W	R/W	R/W	R/W	R/W	R/W	R/W	R/W	R/W	R/W	R/W	R/W
Reset	0	0	0	0	0	0	0	0	0	0	0	0	0	0	0	0

Bit/Field	Name	Type	Reset	Description
31:0	INT	R/W	0x0000.0000	Interrupt Set Pending

Value	Description
0	On a read, indicates that the interrupt is not pending. On a write, no effect.
1	On a read, indicates that the interrupt is pending. On a write, the corresponding interrupt is set to pending even if it is disabled.

If the corresponding interrupt is already pending, setting a bit has no effect.

A bit can only be cleared by setting the corresponding `INT[n]` bit in the **UNPEND0** register.

Register 9: Interrupt 32-43 Set Pending (PEND1), offset 0x204

Note: This register can only be accessed from privileged mode.

The **PEND1** register forces interrupts into the pending state and shows which interrupts are pending. Bit 0 corresponds to Interrupt 32; bit 11 corresponds to Interrupt 43. See Table 2-9 on page 76 for interrupt assignments.

Interrupt 32-43 Set Pending (PEND1)

Base 0xE000.E000
Offset 0x204
Type R/W, reset 0x0000.0000

	31	30	29	28	27	26	25	24	23	22	21	20	19	18	17	16
	reserved															
Type	RO	RO	RO	RO	RO	RO	RO	RO	RO	RO	RO	RO	RO	RO	RO	RO
Reset	0	0	0	0	0	0	0	0	0	0	0	0	0	0	0	0

	15	14	13	12	11	10	9	8	7	6	5	4	3	2	1	0
	reserved				INT											
Type	RO	RO	RO	RO	R/W	R/W	R/W	R/W	R/W	R/W	R/W	R/W	R/W	R/W	R/W	R/W
Reset	0	0	0	0	0	0	0	0	0	0	0	0	0	0	0	0

Bit/Field	Name	Type	Reset	Description
31:12	reserved	RO	0x0000.0	Software should not rely on the value of a reserved bit. To provide compatibility with future products, the value of a reserved bit should be preserved across a read-modify-write operation.
11:0	INT	R/W	0x000	Interrupt Set Pending

Value	Description
0	On a read, indicates that the interrupt is not pending. On a write, no effect.
1	On a read, indicates that the interrupt is pending. On a write, the corresponding interrupt is set to pending even if it is disabled.

If the corresponding interrupt is already pending, setting a bit has no effect.

A bit can only be cleared by setting the corresponding `INT[n]` bit in the **UNPEND1** register.

Register 10: Interrupt 0-31 Clear Pending (UNPEND0), offset 0x280

Note: This register can only be accessed from privileged mode.

The **UNPEND0** register shows which interrupts are pending and removes the pending state from interrupts. Bit 0 corresponds to Interrupt 0; bit 31 corresponds to Interrupt 31.

See Table 2-9 on page 76 for interrupt assignments.

Interrupt 0-31 Clear Pending (UNPEND0)

Base 0xE000.E000
Offset 0x280
Type R/W, reset 0x0000.0000

	31	30	29	28	27	26	25	24	23	22	21	20	19	18	17	16
	INT															
Type	R/W	R/W	R/W	R/W	R/W	R/W	R/W	R/W	R/W	R/W	R/W	R/W	R/W	R/W	R/W	R/W
Reset	0	0	0	0	0	0	0	0	0	0	0	0	0	0	0	0

	15	14	13	12	11	10	9	8	7	6	5	4	3	2	1	0
	INT															
Type	R/W	R/W	R/W	R/W	R/W	R/W	R/W	R/W	R/W	R/W	R/W	R/W	R/W	R/W	R/W	R/W
Reset	0	0	0	0	0	0	0	0	0	0	0	0	0	0	0	0

Bit/Field	Name	Type	Reset	Description
31:0	INT	R/W	0x0000.0000	Interrupt Clear Pending

Value	Description
0	On a read, indicates that the interrupt is not pending. On a write, no effect.
1	On a read, indicates that the interrupt is pending. On a write, clears the corresponding `INT[n]` bit in the **PEND0** register, so that interrupt [n] is no longer pending. Setting a bit does not affect the active state of the corresponding interrupt.

Register 11: Interrupt 32-43 Clear Pending (UNPEND1), offset 0x284

Note: This register can only be accessed from privileged mode.

The **UNPEND1** register shows which interrupts are pending and removes the pending state from interrupts. Bit 0 corresponds to Interrupt 32; bit 11 corresponds to Interrupt 43. See Table 2-9 on page 76 for interrupt assignments.

Interrupt 32-43 Clear Pending (UNPEND1)

Base 0xE000.E000
Offset 0x284
Type R/W, reset 0x0000.0000

	31	30	29	28	27	26	25	24	23	22	21	20	19	18	17	16
	reserved															
Type	RO	RO	RO	RO	RO	RO	RO	RO	RO	RO	RO	RO	RO	RO	RO	RO
Reset	0	0	0	0	0	0	0	0	0	0	0	0	0	0	0	0

	15	14	13	12	11	10	9	8	7	6	5	4	3	2	1	0
	reserved				INT											
Type	RO	RO	RO	RO	R/W	R/W	R/W	R/W	R/W	R/W	R/W	R/W	R/W	R/W	R/W	R/W
Reset	0	0	0	0	0	0	0	0	0	0	0	0	0	0	0	0

Bit/Field	Name	Type	Reset	Description
31:12	reserved	RO	0x0000.0	Software should not rely on the value of a reserved bit. To provide compatibility with future products, the value of a reserved bit should be preserved across a read-modify-write operation.
11:0	INT	R/W	0x000	Interrupt Clear Pending

Value	Description
0	On a read, indicates that the interrupt is not pending. On a write, no effect.
1	On a read, indicates that the interrupt is pending. On a write, clears the corresponding `INT[n]` bit in the **PEND1** register, so that interrupt [n] is no longer pending. Setting a bit does not affect the active state of the corresponding interrupt.

Register 12: Interrupt 0-31 Active Bit (ACTIVE0), offset 0x300

Note: This register can only be accessed from privileged mode.

The **ACTIVE0** register indicates which interrupts are active. Bit 0 corresponds to Interrupt 0; bit 31 corresponds to Interrupt 31.

See Table 2-9 on page 76 for interrupt assignments.

Caution – Do not manually set or clear the bits in this register.

Interrupt 0-31 Active Bit (ACTIVE0)

Base 0xE000.E000
Offset 0x300
Type RO, reset 0x0000.0000

	31	30	29	28	27	26	25	24	23	22	21	20	19	18	17	16
	INT															
Type	RO	RO	RO	RO	RO	RO	RO	RO	RO	RO	RO	RO	RO	RO	RO	RO
Reset	0	0	0	0	0	0	0	0	0	0	0	0	0	0	0	0

	15	14	13	12	11	10	9	8	7	6	5	4	3	2	1	0
	INT															
Type	RO	RO	RO	RO	RO	RO	RO	RO	RO	RO	RO	RO	RO	RO	RO	RO
Reset	0	0	0	0	0	0	0	0	0	0	0	0	0	0	0	0

Bit/Field	Name	Type	Reset	Description
31:0	INT	RO	0x0000.0000	Interrupt Active

Value	Description
0	The corresponding interrupt is not active.
1	The corresponding interrupt is active, or active and pending.

Register 13: Interrupt 32-43 Active Bit (ACTIVE1), offset 0x304

Note: This register can only be accessed from privileged mode.

The **ACTIVE1** register indicates which interrupts are active. Bit 0 corresponds to Interrupt 32; bit 11 corresponds to Interrupt 43. See Table 2-9 on page 76 for interrupt assignments.

Caution – Do not manually set or clear the bits in this register.

Interrupt 32-43 Active Bit (ACTIVE1)

Base 0xE000.E000
Offset 0x304
Type RO, reset 0x0000.0000

	31	30	29	28	27	26	25	24	23	22	21	20	19	18	17	16
	reserved															
Type	RO	RO	RO	RO	RO	RO	RO	RO	RO	RO	RO	RO	RO	RO	RO	RO
Reset	0	0	0	0	0	0	0	0	0	0	0	0	0	0	0	0

	15	14	13	12	11	10	9	8	7	6	5	4	3	2	1	0
	reserved				INT											
Type	RO	RO	RO	RO	RO	RO	RO	RO	RO	RO	RO	RO	RO	RO	RO	RO
Reset	0	0	0	0	0	0	0	0	0	0	0	0	0	0	0	0

Bit/Field	Name	Type	Reset	Description
31:12	reserved	RO	0x0000.0	Software should not rely on the value of a reserved bit. To provide compatibility with future products, the value of a reserved bit should be preserved across a read-modify-write operation.
11:0	INT	RO	0x000	Interrupt Active Value Description 0 The corresponding interrupt is not active. 1 The corresponding interrupt is active, or active and pending.

Register 14: Interrupt 0-3 Priority (PRI0), offset 0x400

Register 15: Interrupt 4-7 Priority (PRI1), offset 0x404

Register 16: Interrupt 8-11 Priority (PRI2), offset 0x408

Register 17: Interrupt 12-15 Priority (PRI3), offset 0x40C

Register 18: Interrupt 16-19 Priority (PRI4), offset 0x410

Register 19: Interrupt 20-23 Priority (PRI5), offset 0x414

Register 20: Interrupt 24-27 Priority (PRI6), offset 0x418

Register 21: Interrupt 28-31 Priority (PRI7), offset 0x41C

Register 22: Interrupt 32-35 Priority (PRI8), offset 0x420

Register 23: Interrupt 36-39 Priority (PRI9), offset 0x424

Register 24: Interrupt 40-43 Priority (PRI10), offset 0x428

Note: This register can only be accessed from privileged mode.

The **PRIn** registers provide 3-bit priority fields for each interrupt. These registers are byte accessible. Each register holds four priority fields that are assigned to interrupts as follows:

PRIn Register Bit Field	Interrupt
Bits 31:29	Interrupt [4n+3]
Bits 23:21	Interrupt [4n+2]
Bits 15:13	Interrupt [4n+1]
Bits 7:5	Interrupt [4n]

See Table 2-9 on page 76 for interrupt assignments.

Each priority level can be split into separate group priority and subpriority fields. The `PRIGROUP` field in the **Application Interrupt and Reset Control (APINT)** register (see page 121) indicates the position of the binary point that splits the priority and subpriority fields.

These registers can only be accessed from privileged mode.

Interrupt 0-3 Priority (PRI0)

Base 0xE000.E000
Offset 0x400
Type R/W, reset 0x0000.0000

	31	30	29	28	27	26	25	24	23	22	21	20	19	18	17	16
	INTD			reserved					INTC			reserved				
Type	R/W	R/W	R/W	RO	RO	RO	RO	RO	R/W	R/W	R/W	RO	RO	RO	RO	RO
Reset	0	0	0	0	0	0	0	0	0	0	0	0	0	0	0	0

	15	14	13	12	11	10	9	8	7	6	5	4	3	2	1	0
	INTB			reserved					INTA			reserved				
Type	R/W	R/W	R/W	RO	RO	RO	RO	RO	R/W	R/W	R/W	RO	RO	RO	RO	RO
Reset	0	0	0	0	0	0	0	0	0	0	0	0	0	0	0	0

Bit/Field	Name	Type	Reset	Description
31:29	INTD	R/W	0x0	Interrupt Priority for Interrupt [4n+3] This field holds a priority value, 0-7, for the interrupt with the number [4n+3], where n is the number of the **Interrupt Priority** register (n=0 for **PRI0**, and so on). The lower the value, the greater the priority of the corresponding interrupt.
28:24	reserved	RO	0x0	Software should not rely on the value of a reserved bit. To provide compatibility with future products, the value of a reserved bit should be preserved across a read-modify-write operation.
23:21	INTC	R/W	0x0	Interrupt Priority for Interrupt [4n+2] This field holds a priority value, 0-7, for the interrupt with the number [4n+2], where n is the number of the **Interrupt Priority** register (n=0 for **PRI0**, and so on). The lower the value, the greater the priority of the corresponding interrupt.
20:16	reserved	RO	0x0	Software should not rely on the value of a reserved bit. To provide compatibility with future products, the value of a reserved bit should be preserved across a read-modify-write operation.
15:13	INTB	R/W	0x0	Interrupt Priority for Interrupt [4n+1] This field holds a priority value, 0-7, for the interrupt with the number [4n+1], where n is the number of the **Interrupt Priority** register (n=0 for **PRI0**, and so on). The lower the value, the greater the priority of the corresponding interrupt.
12:8	reserved	RO	0x0	Software should not rely on the value of a reserved bit. To provide compatibility with future products, the value of a reserved bit should be preserved across a read-modify-write operation.
7:5	INTA	R/W	0x0	Interrupt Priority for Interrupt [4n] This field holds a priority value, 0-7, for the interrupt with the number [4n], where n is the number of the **Interrupt Priority** register (n=0 for **PRI0**, and so on). The lower the value, the greater the priority of the corresponding interrupt.
4:0	reserved	RO	0x0	Software should not rely on the value of a reserved bit. To provide compatibility with future products, the value of a reserved bit should be preserved across a read-modify-write operation.

Register 25: Software Trigger Interrupt (SWTRIG), offset 0xF00

Note: Only privileged software can enable unprivileged access to the **SWTRIG** register.

Writing an interrupt number to the **SWTRIG** register generates a Software Generated Interrupt (SGI). See Table 2-9 on page 76 for interrupt assignments.

When the `MAINPEND` bit in the **Configuration and Control (CFGCTRL)** register (see page 125) is set, unprivileged software can access the **SWTRIG** register.

Software Trigger Interrupt (SWTRIG)

Base 0xE000.E000
Offset 0xF00
Type WO, reset 0x0000.0000

	31	30	29	28	27	26	25	24	23	22	21	20	19	18	17	16
	reserved															
Type	RO	RO	RO	RO	RO	RO	RO	RO	RO	RO	RO	RO	RO	RO	RO	RO
Reset	0	0	0	0	0	0	0	0	0	0	0	0	0	0	0	0

	15	14	13	12	11	10	9	8	7	6	5	4	3	2	1	0
	reserved										INTID					
Type	RO	RO	RO	RO	RO	RO	RO	RO	RO	RO	WO	WO	WO	WO	WO	WO
Reset	0	0	0	0	0	0	0	0	0	0	0	0	0	0	0	0

Bit/Field	Name	Type	Reset	Description
31:6	reserved	RO	0x0000.00	Software should not rely on the value of a reserved bit. To provide compatibility with future products, the value of a reserved bit should be preserved across a read-modify-write operation.
5:0	INTID	WO	0x00	Interrupt ID This field holds the interrupt ID of the required SGI. For example, a value of 0x3 generates an interrupt on IRQ3.

3.5 System Control Block (SCB) Register Descriptions

This section lists and describes the System Control Block (SCB) registers, in numerical order by address offset. The SCB registers can only be accessed from privileged mode.

All registers must be accessed with aligned word accesses except for the **FAULTSTAT** and **SYSPRI1**-**SYSPRI3** registers, which can be accessed with byte or aligned halfword or word accesses. The processor does not support unaligned accesses to system control block registers.

Register 26: CPU ID Base (CPUID), offset 0xD00

Note: This register can only be accessed from privileged mode.

The **CPUID** register contains the ARM® Cortex™-M3 processor part number, version, and implementation information.

CPU ID Base (CPUID)

Base 0xE000.E000
Offset 0xD00
Type RO, reset 0x411F.C231

	31	30	29	28	27	26	25	24	23	22	21	20	19	18	17	16
	IMP								VAR				CON			
Type	R0	R0	R0	R0	R0	R0	R0	R0	RO	RO	RO	RO	RO	RO	RO	RO
Reset	0	1	0	0	0	0	0	1	0	0	0	1	1	1	1	1

	15	14	13	12	11	10	9	8	7	6	5	4	3	2	1	0
	PARTNO												REV			
Type	RO	RO	RO	RO	RO	RO	RO	RO	RO	RO	RO	RO	RO	RO	RO	RO
Reset	1	1	0	0	0	0	1	0	0	0	1	1	0	0	0	1

Bit/Field	Name	Type	Reset	Description
31:24	IMP	R0	0x41	Implementer Code Value Description 0x41 ARM
23:20	VAR	RO	0x1	Variant Number Value Description 0x1 The rn value in the rnpn product revision identifier, for example, the 1 in r1p1.
19:16	CON	RO	0xF	Constant Value Description 0xF Always reads as 0xF.
15:4	PARTNO	RO	0xC23	Part Number Value Description 0xC23 Cortex-M3 processor.
3:0	REV	RO	0x1	Revision Number Value Description 0x1 The pn value in the rnpn product revision identifier, for example, the 1 in r1p1.

Register 27: Interrupt Control and State (INTCTRL), offset 0xD04

Note: This register can only be accessed from privileged mode.

The **INCTRL** register provides a set-pending bit for the NMI exception, and set-pending and clear-pending bits for the PendSV and SysTick exceptions. In addition, bits in this register indicate the exception number of the exception being processed, whether there are preempted active exceptions, the exception number of the highest priority pending exception, and whether any interrupts are pending.

When writing to **INCTRL**, the effect is unpredictable when writing a 1 to both the `PENDSV` and `UNPENDSV` bits, or writing a 1 to both the `PENDSTSET` and `PENDSTCLR` bits.

Interrupt Control and State (INTCTRL)

Base 0xE000.E000
Offset 0xD04
Type R/W, reset 0x0000.0000

	31	30	29	28	27	26	25	24	23	22	21	20	19	18	17	16
	NMISET	reserved		PENDSV	UNPENDSV	PENDSTSET	PENDSTCLR	reserved	ISRPRE	ISRPEND	reserved				VECPEND	
Type	R/W	RO	RO	R/W	WO	R/W	WO	RO	RO	RO	RO	RO	RO	RO	RO	RO
Reset	0	0	0	0	0	0	0	0	0	0	0	0	0	0	0	0

	15	14	13	12	11	10	9	8	7	6	5	4	3	2	1	0
	VECPEND				RETBASE	reserved					VECACT					
Type	RO	RO	RO	RO	RO	RO	RO	RO	RO	RO	RO	RO	RO	RO	RO	RO
Reset	0	0	0	0	0	0	0	0	0	0	0	0	0	0	0	0

Bit/Field	Name	Type	Reset	Description
31	NMISET	R/W	0	NMI Set Pending Value Description 0 On a read, indicates an NMI exception is not pending. On a write, no effect. 1 On a read, indicates an NMI exception is pending. On a write, changes the NMI exception state to pending. Because NMI is the highest-priority exception, normally the processor enters the NMI exception handler as soon as it registers the setting of this bit, and clears this bit on entering the interrupt handler. A read of this bit by the NMI exception handler returns 1 only if the `NMI` signal is reasserted while the processor is executing that handler.
30:29	reserved	RO	0x0	Software should not rely on the value of a reserved bit. To provide compatibility with future products, the value of a reserved bit should be preserved across a read-modify-write operation.
28	PENDSV	R/W	0	PendSV Set Pending Value Description 0 On a read, indicates a PendSV exception is not pending. On a write, no effect. 1 On a read, indicates a PendSV exception is pending. On a write, changes the PendSV exception state to pending. Setting this bit is the only way to set the PendSV exception state to pending. This bit is cleared by writing a 1 to the `UNPENDSV` bit.

Bit/Field	Name	Type	Reset	Description
27	UNPENDSV	WO	0	PendSV Clear Pending Value Description 0 On a write, no effect. 1 On a write, removes the pending state from the PendSV exception. This bit is write only; on a register read, its value is unknown.
26	PENDSTSET	R/W	0	SysTick Set Pending Value Description 0 On a read, indicates a SysTick exception is not pending. On a write, no effect. 1 On a read, indicates a SysTick exception is pending. On a write, changes the SysTick exception state to pending. This bit is cleared by writing a 1 to the `PENDSTCLR` bit.
25	PENDSTCLR	WO	0	SysTick Clear Pending Value Description 0 On a write, no effect. 1 On a write, removes the pending state from the SysTick exception. This bit is write only; on a register read, its value is unknown.
24	reserved	RO	0	Software should not rely on the value of a reserved bit. To provide compatibility with future products, the value of a reserved bit should be preserved across a read-modify-write operation.
23	ISRPRE	RO	0	Debug Interrupt Handling Value Description 0 The release from halt does not take an interrupt. 1 The release from halt takes an interrupt. This bit is only meaningful in Debug mode and reads as zero when the processor is not in Debug mode.
22	ISRPEND	RO	0	Interrupt Pending Value Description 0 No interrupt is pending. 1 An interrupt is pending. This bit provides status for all interrupts excluding NMI and Faults.
21:18	reserved	RO	0x0	Software should not rely on the value of a reserved bit. To provide compatibility with future products, the value of a reserved bit should be preserved across a read-modify-write operation.

Bit/Field	Name	Type	Reset	Description
17:12	VECPEND	RO	0x00	Interrupt Pending Vector Number This field contains the exception number of the highest priority pending enabled exception. The value indicated by this field includes the effect of the **BASEPRI** and **FAULTMASK** registers, but not any effect of the **PRIMASK** register. Value — Description 0x00 — No exceptions are pending 0x01 — Reserved 0x02 — NMI 0x03 — Hard fault 0x04 — Memory management fault 0x05 — Bus fault 0x06 — Usage fault 0x07-0x0A — Reserved 0x0B — SVCall 0x0C — Reserved for Debug 0x0D — Reserved 0x0E — PendSV 0x0F — SysTick 0x10 — Interrupt Vector 0 0x11 — Interrupt Vector 1 ... — ... 0x3B — Interrupt Vector 43 0x3C-0x3F — Reserved
11	RETBASE	RO	0	Return to Base Value — Description 0 — There are preempted active exceptions to execute. 1 — There are no active exceptions, or the currently executing exception is the only active exception. This bit provides status for all interrupts excluding NMI and Faults. This bit only has meaning if the processor is currently executing an ISR (the **Interrupt Program Status (IPSR)** register is non-zero).
10:6	reserved	RO	0x0	Software should not rely on the value of a reserved bit. To provide compatibility with future products, the value of a reserved bit should be preserved across a read-modify-write operation.
5:0	VECACT	RO	0x00	Interrupt Pending Vector Number This field contains the active exception number. The exception numbers can be found in the description for the `VECPEND` field. If this field is clear, the processor is in Thread mode. This field contains the same value as the `ISRNUM` field in the **IPSR** register. Subtract 16 from this value to obtain the IRQ number required to index into the **Interrupt Set Enable (ENn)**, **Interrupt Clear Enable (DISn)**, **Interrupt Set Pending (PENDn)**, **Interrupt Clear Pending (UNPENDn)**, and **Interrupt Priority (PRIn)** registers (see page 57).

Register 28: Vector Table Offset (VTABLE), offset 0xD08

Note: This register can only be accessed from privileged mode.

The **VTABLE** register indicates the offset of the vector table base address from memory address 0x0000.0000.

Vector Table Offset (VTABLE)

Base 0xE000.E000
Offset 0xD08
Type R/W, reset 0x0000.0000

	31	30	29	28	27	26	25	24	23	22	21	20	19	18	17	16
	reserved		BASE	OFFSET												
Type	RO	RO	R/W	R/W	R/W	R/W	R/W	R/W	R/W	R/W	R/W	R/W	R/W	R/W	R/W	R/W
Reset	0	0	0	0	0	0	0	0	0	0	0	0	0	0	0	0

	15	14	13	12	11	10	9	8	7	6	5	4	3	2	1	0
	OFFSET								reserved							
Type	R/W	R/W	R/W	R/W	R/W	R/W	R/W	R/W	RO	RO	RO	RO	RO	RO	RO	RO
Reset	0	0	0	0	0	0	0	0	0	0	0	0	0	0	0	0

Bit/Field	Name	Type	Reset	Description
31:30	reserved	RO	0x0	Software should not rely on the value of a reserved bit. To provide compatibility with future products, the value of a reserved bit should be preserved across a read-modify-write operation.
29	BASE	R/W	0	Vector Table Base Value Description 0 The vector table is in the code memory region. 1 The vector table is in the SRAM memory region.
28:8	OFFSET	R/W	0x000.00	Vector Table Offset When configuring the `OFFSET` field, the offset must be aligned to the number of exception entries in the vector table. Because there are 43 interrupts, the offset must be aligned on a 256-byte boundary.
7:0	reserved	RO	0x00	Software should not rely on the value of a reserved bit. To provide compatibility with future products, the value of a reserved bit should be preserved across a read-modify-write operation.

Register 29: Application Interrupt and Reset Control (APINT), offset 0xD0C

Note: This register can only be accessed from privileged mode.

The **APINT** register provides priority grouping control for the exception model, endian status for data accesses, and reset control of the system. To write to this register, 0x05FA must be written to the `VECTKEY` field, otherwise the write is ignored.

The `PRIGROUP` field indicates the position of the binary point that splits the `INTx` fields in the **Interrupt Priority (PRIx)** registers into separate group priority and subpriority fields. Table 3-8 on page 121 shows how the `PRIGROUP` value controls this split. The bit numbers in the Group Priority Field and Subpriority Field columns in the table refer to the bits in the `INTA` field. For the `INTB` field, the corresponding bits are 15:13; for `INTC`, 23:21; and for `INTD`, 31:29.

Note: Determining preemption of an exception uses only the group priority field.

Table 3-8. Interrupt Priority Levels

`PRIGROUP` Bit Field	Binary Point[a]	Group Priority Field	Subpriority Field	Group Priorities	Subpriorities
0x0 - 0x4	bxxx.	[7:5]	None	8	1
0x5	bxx.y	[7:6]	[5]	4	2
0x6	bx.yy	[7]	[6:5]	2	4
0x7	b.yyy	None	[7:5]	1	8

a. `INTx` field showing the binary point. An x denotes a group priority field bit, and a y denotes a subpriority field bit.

Application Interrupt and Reset Control (APINT)

Base 0xE000.E000
Offset 0xD0C
Type R/W, reset 0xFA05.0000

	31	30	29	28	27	26	25	24	23	22	21	20	19	18	17	16
	VECTKEY															
Type	R/W	R/W	R/W	R/W	R/W	R/W	R/W	R/W	R/W	R/W	R/W	R/W	R/W	R/W	R/W	R/W
Reset	1	1	1	1	1	0	1	0	0	0	0	0	0	1	0	1

	15	14	13	12	11	10	9	8	7	6	5	4	3	2	1	0
	ENDIANESS	reserved				PRIGROUP			reserved					SYSRESREQ	VECTCLRACT	VECTRESET
Type	RO	RO	RO	RO	RO	R/W	R/W	R/W	RO	RO	RO	RO	RO	WO	WO	WO
Reset	0	0	0	0	0	0	0	0	0	0	0	0	0	0	0	0

Bit/Field	Name	Type	Reset	Description
31:16	VECTKEY	R/W	0xFA05	Register Key This field is used to guard against accidental writes to this register. 0x05FA must be written to this field in order to change the bits in this register. On a read, 0xFA05 is returned.
15	ENDIANESS	RO	0	Data Endianess The Stellaris implementation uses only little-endian mode so this is cleared to 0.
14:11	reserved	RO	0x0	Software should not rely on the value of a reserved bit. To provide compatibility with future products, the value of a reserved bit should be preserved across a read-modify-write operation.

Bit/Field	Name	Type	Reset	Description
10:8	PRIGROUP	R/W	0x0	Interrupt Priority Grouping This field determines the split of group priority from subpriority (see Table 3-8 on page 121 for more information).
7:3	reserved	RO	0x0	Software should not rely on the value of a reserved bit. To provide compatibility with future products, the value of a reserved bit should be preserved across a read-modify-write operation.
2	SYSRESREQ	WO	0	System Reset Request Value Description 0 No effect. 1 Resets the core and all on-chip peripherals except the Debug interface. This bit is automatically cleared during the reset of the core and reads as 0.
1	VECTCLRACT	WO	0	Clear Active NMI / Fault This bit is reserved for Debug use and reads as 0. This bit must be written as a 0, otherwise behavior is unpredictable.
0	VECTRESET	WO	0	System Reset This bit is reserved for Debug use and reads as 0. This bit must be written as a 0, otherwise behavior is unpredictable.

Register 30: System Control (SYSCTRL), offset 0xD10

Note: This register can only be accessed from privileged mode.

The **SYSCTRL** register controls features of entry to and exit from low-power state.

System Control (SYSCTRL)

Base 0xE000.E000
Offset 0xD10
Type R/W, reset 0x0000.0000

	31	30	29	28	27	26	25	24	23	22	21	20	19	18	17	16
	reserved															
Type	RO	RO	RO	RO	RO	RO	RO	RO	RO	RO	RO	RO	RO	RO	RO	RO
Reset	0	0	0	0	0	0	0	0	0	0	0	0	0	0	0	0

	15	14	13	12	11	10	9	8	7	6	5	4	3	2	1	0
	reserved											SEVONPEND	reserved	SLEEPDEEP	SLEEPEXIT	reserved
Type	RO	RO	RO	RO	RO	RO	RO	RO	RO	RO	RO	R/W	RO	R/W	R/W	RO
Reset	0	0	0	0	0	0	0	0	0	0	0	0	0	0	0	0

Bit/Field	Name	Type	Reset	Description
31:5	reserved	RO	0x0000.00	Software should not rely on the value of a reserved bit. To provide compatibility with future products, the value of a reserved bit should be preserved across a read-modify-write operation.
4	SEVONPEND	R/W	0	Wake Up on Pending Value Description 0 Only enabled interrupts or events can wake up the processor; disabled interrupts are excluded. 1 Enabled events and all interrupts, including disabled interrupts, can wake up the processor. When an event or interrupt enters the pending state, the event signal wakes up the processor from `WFE`. If the processor is not waiting for an event, the event is registered and affects the next `WFE`. The processor also wakes up on execution of a `SEV` instruction or an external event.
3	reserved	RO	0	Software should not rely on the value of a reserved bit. To provide compatibility with future products, the value of a reserved bit should be preserved across a read-modify-write operation.
2	SLEEPDEEP	R/W	0	Deep Sleep Enable Value Description 0 Use Sleep mode as the low power mode. 1 Use Deep-sleep mode as the low power mode.

Bit/Field	Name	Type	Reset	Description
1	SLEEPEXIT	R/W	0	Sleep on ISR Exit Value Description 0 When returning from Handler mode to Thread mode, do not sleep when returning to Thread mode. 1 When returning from Handler mode to Thread mode, enter sleep or deep sleep on return from an ISR. Setting this bit enables an interrupt-driven application to avoid returning to an empty main application.
0	reserved	RO	0	Software should not rely on the value of a reserved bit. To provide compatibility with future products, the value of a reserved bit should be preserved across a read-modify-write operation.

Register 31: Configuration and Control (CFGCTRL), offset 0xD14

Note: This register can only be accessed from privileged mode.

The **CFGCTRL** register controls entry to Thread mode and enables: the handlers for NMI, hard fault and faults escalated by the **FAULTMASK** register to ignore bus faults; trapping of divide by zero and unaligned accesses; and access to the **SWTRIG** register by unprivileged software (see page 115).

Configuration and Control (CFGCTRL)

Base 0xE000.E000
Offset 0xD14
Type R/W, reset 0x0000.0000

	31	30	29	28	27	26	25	24	23	22	21	20	19	18	17	16
	reserved															
Type	RO	RO	RO	RO	RO	RO	RO	RO	RO	RO	RO	RO	RO	RO	RO	RO
Reset	0	0	0	0	0	0	0	0	0	0	0	0	0	0	0	0

	15	14	13	12	11	10	9	8	7	6	5	4	3	2	1	0
	reserved						STKALIGN	BFHFNMIGN	reserved			DIV0	UNALIGNED	reserved	MAINPEND	BASETHR
Type	RO	RO	RO	RO	RO	RO	R/W	R/W	RO	RO	RO	R/W	R/W	RO	R/W	R/W
Reset	0	0	0	0	0	0	0	0	0	0	0	0	0	0	0	0

Bit/Field	Name	Type	Reset	Description
31:10	reserved	RO	0x0000.00	Software should not rely on the value of a reserved bit. To provide compatibility with future products, the value of a reserved bit should be preserved across a read-modify-write operation.
9	STKALIGN	R/W	0	Stack Alignment on Exception Entry Value Description 0 The stack is 4-byte aligned. 1 The stack is 8-byte aligned. On exception entry, the processor uses bit 9 of the stacked **PSR** to indicate the stack alignment. On return from the exception, it uses this stacked bit to restore the correct stack alignment.
8	BFHFNMIGN	R/W	0	Ignore Bus Fault in NMI and Fault This bit enables handlers with priority -1 or -2 to ignore data bus faults caused by load and store instructions. The setting of this bit applies to the hard fault, NMI, and **FAULTMASK** escalated handlers. Value Description 0 Data bus faults caused by load and store instructions cause a lock-up. 1 Handlers running at priority -1 and -2 ignore data bus faults caused by load and store instructions. Set this bit only when the handler and its data are in absolutely safe memory. The normal use of this bit is to probe system devices and bridges to detect control path problems and fix them.
7:5	reserved	RO	0x0	Software should not rely on the value of a reserved bit. To provide compatibility with future products, the value of a reserved bit should be preserved across a read-modify-write operation.

Bit/Field	Name	Type	Reset	Description
4	DIV0	R/W	0	Trap on Divide by 0 This bit enables faulting or halting when the processor executes an `SDIV` or `UDIV` instruction with a divisor of 0. Value Description 0 Do not trap on divide by 0. A divide by zero returns a quotient of 0. 1 Trap on divide by 0.
3	UNALIGNED	R/W	0	Trap on Unaligned Access Value Description 0 Do not trap on unaligned halfword and word accesses. 1 Trap on unaligned halfword and word accesses. An unaligned access generates a usage fault. Unaligned `LDM`, `STM`, `LDRD`, and `STRD` instructions always fault regardless of whether `UNALIGNED` is set.
2	reserved	RO	0	Software should not rely on the value of a reserved bit. To provide compatibility with future products, the value of a reserved bit should be preserved across a read-modify-write operation.
1	MAINPEND	R/W	0	Allow Main Interrupt Trigger Value Description 0 Disables unprivileged software access to the **SWTRIG** register. 1 Enables unprivileged software access to the **SWTRIG** register (see page 115).
0	BASETHR	R/W	0	Thread State Control Value Description 0 The processor can enter Thread mode only when no exception is active. 1 The processor can enter Thread mode from any level under the control of an EXC_RETURN value (see “Exception Return” on page 81 for more information).

Register 32: System Handler Priority 1 (SYSPRI1), offset 0xD18

Note: This register can only be accessed from privileged mode.

The **SYSPRI1** register configures the priority level, 0 to 7 of the usage fault, bus fault, and memory management fault exception handlers. This register is byte-accessible.

System Handler Priority 1 (SYSPRI1)

Base 0xE000.E000
Offset 0xD18
Type R/W, reset 0x0000.0000

	31	30	29	28	27	26	25	24	23	22	21	20	19	18	17	16
	reserved								USAGE			reserved				
Type	RO	RO	RO	RO	RO	RO	RO	RO	R/W	R/W	R/W	RO	RO	RO	RO	RO
Reset	0	0	0	0	0	0	0	0	0	0	0	0	0	0	0	0

	15	14	13	12	11	10	9	8	7	6	5	4	3	2	1	0
	BUS			reserved					MEM			reserved				
Type	R/W	R/W	R/W	RO	RO	RO	RO	RO	R/W	R/W	R/W	RO	RO	RO	RO	RO
Reset	0	0	0	0	0	0	0	0	0	0	0	0	0	0	0	0

Bit/Field	Name	Type	Reset	Description
31:24	reserved	RO	0x00	Software should not rely on the value of a reserved bit. To provide compatibility with future products, the value of a reserved bit should be preserved across a read-modify-write operation.
23:21	USAGE	R/W	0x0	Usage Fault Priority This field configures the priority level of the usage fault. Configurable priority values are in the range 0-7, with lower values having higher priority.
20:16	reserved	RO	0x0	Software should not rely on the value of a reserved bit. To provide compatibility with future products, the value of a reserved bit should be preserved across a read-modify-write operation.
15:13	BUS	R/W	0x0	Bus Fault Priority This field configures the priority level of the bus fault. Configurable priority values are in the range 0-7, with lower values having higher priority.
12:8	reserved	RO	0x0	Software should not rely on the value of a reserved bit. To provide compatibility with future products, the value of a reserved bit should be preserved across a read-modify-write operation.
7:5	MEM	R/W	0x0	Memory Management Fault Priority This field configures the priority level of the memory management fault. Configurable priority values are in the range 0-7, with lower values having higher priority.
4:0	reserved	RO	0x0	Software should not rely on the value of a reserved bit. To provide compatibility with future products, the value of a reserved bit should be preserved across a read-modify-write operation.

Register 33: System Handler Priority 2 (SYSPRI2), offset 0xD1C

Note: This register can only be accessed from privileged mode.

The **SYSPRI2** register configures the priority level, 0 to 7 of the SVCall handler. This register is byte-accessible.

System Handler Priority 2 (SYSPRI2)

Base 0xE000.E000
Offset 0xD1C
Type R/W, reset 0x0000.0000

	31	30	29	28	27	26	25	24	23	22	21	20	19	18	17	16
	SVC			reserved												
Type	R/W	R/W	R/W	RO	RO	RO	RO	RO	RO	RO	RO	RO	RO	RO	RO	RO
Reset	0	0	0	0	0	0	0	0	0	0	0	0	0	0	0	0

	15	14	13	12	11	10	9	8	7	6	5	4	3	2	1	0
	reserved															
Type	RO	RO	RO	RO	RO	RO	RO	RO	RO	RO	RO	RO	RO	RO	RO	RO
Reset	0	0	0	0	0	0	0	0	0	0	0	0	0	0	0	0

Bit/Field	Name	Type	Reset	Description
31:29	SVC	R/W	0x0	SVCall Priority This field configures the priority level of SVCall. Configurable priority values are in the range 0-7, with lower values having higher priority.
28:0	reserved	RO	0x000.0000	Software should not rely on the value of a reserved bit. To provide compatibility with future products, the value of a reserved bit should be preserved across a read-modify-write operation.

Register 34: System Handler Priority 3 (SYSPRI3), offset 0xD20

Note: This register can only be accessed from privileged mode.

The **SYSPRI3** register configures the priority level, 0 to 7 of the SysTick exception and PendSV handlers. This register is byte-accessible.

System Handler Priority 3 (SYSPRI3)

Base 0xE000.E000
Offset 0xD20
Type R/W, reset 0x0000.0000

	31	30	29	28	27	26	25	24	23	22	21	20	19	18	17	16
	TICK			reserved					PENDSV			reserved				
Type	R/W	R/W	R/W	RO	RO	RO	RO	RO	R/W	R/W	R/W	RO	RO	RO	RO	RO
Reset	0	0	0	0	0	0	0	0	0	0	0	0	0	0	0	0

	15	14	13	12	11	10	9	8	7	6	5	4	3	2	1	0
	reserved								DEBUG			reserved				
Type	RO	RO	RO	RO	RO	RO	RO	RO	R/W	R/W	R/W	RO	RO	RO	RO	RO
Reset	0	0	0	0	0	0	0	0	0	0	0	0	0	0	0	0

Bit/Field	Name	Type	Reset	Description
31:29	TICK	R/W	0x0	SysTick Exception Priority This field configures the priority level of the SysTick exception. Configurable priority values are in the range 0-7, with lower values having higher priority.
28:24	reserved	RO	0x0	Software should not rely on the value of a reserved bit. To provide compatibility with future products, the value of a reserved bit should be preserved across a read-modify-write operation.
23:21	PENDSV	R/W	0x0	PendSV Priority This field configures the priority level of PendSV. Configurable priority values are in the range 0-7, with lower values having higher priority.
20:8	reserved	RO	0x000	Software should not rely on the value of a reserved bit. To provide compatibility with future products, the value of a reserved bit should be preserved across a read-modify-write operation.
7:5	DEBUG	R/W	0x0	Debug Priority This field configures the priority level of Debug. Configurable priority values are in the range 0-7, with lower values having higher priority.
4:0	reserved	RO	0x0.0000	Software should not rely on the value of a reserved bit. To provide compatibility with future products, the value of a reserved bit should be preserved across a read-modify-write operation.

Register 35: System Handler Control and State (SYSHNDCTRL), offset 0xD24

Note: This register can only be accessed from privileged mode.

The **SYSHNDCTRL** register enables the system handlers, and indicates the pending status of the usage fault, bus fault, memory management fault, and SVC exceptions as well as the active status of the system handlers.

If a system handler is disabled and the corresponding fault occurs, the processor treats the fault as a hard fault.

This register can be modified to change the pending or active status of system exceptions. An OS kernel can write to the active bits to perform a context switch that changes the current exception type.

Caution – Software that changes the value of an active bit in this register without correct adjustment to the stacked content can cause the processor to generate a fault exception. Ensure software that writes to this register retains and subsequently restores the current active status.

If the value of a bit in this register must be modified after enabling the system handlers, a read-modify-write procedure must be used to ensure that only the required bit is modified.

System Handler Control and State (SYSHNDCTRL)

Base 0xE000.E000
Offset 0xD24
Type R/W, reset 0x0000.0000

	31	30	29	28	27	26	25	24	23	22	21	20	19	18	17	16
	reserved													USAGE	BUS	MEM
Type	RO	RO	RO	RO	RO	RO	RO	RO	RO	RO	RO	RO	RO	R/W	R/W	R/W
Reset	0	0	0	0	0	0	0	0	0	0	0	0	0	0	0	0

	15	14	13	12	11	10	9	8	7	6	5	4	3	2	1	0
	SVC	BUSP	MEMP	USAGEP	TICK	PNDSV	reserved	MON	SVCA	reserved			USGA	reserved	BUSA	MEMA
Type	R/W	R/W	R/W	R/W	R/W	R/W	RO	R/W	R/W	RO	RO	RO	R/W	RO	R/W	R/W
Reset	0	0	0	0	0	0	0	0	0	0	0	0	0	0	0	0

Bit/Field	Name	Type	Reset	Description
31:19	reserved	RO	0x000	Software should not rely on the value of a reserved bit. To provide compatibility with future products, the value of a reserved bit should be preserved across a read-modify-write operation.
18	USAGE	R/W	0	Usage Fault Enable Value Description 0 Disables the usage fault exception. 1 Enables the usage fault exception.
17	BUS	R/W	0	Bus Fault Enable Value Description 0 Disables the bus fault exception. 1 Enables the bus fault exception.

Bit/Field	Name	Type	Reset	Description
16	MEM	R/W	0	Memory Management Fault Enable Value Description 0 Disables the memory management fault exception. 1 Enables the memory management fault exception.
15	SVC	R/W	0	SVC Call Pending Value Description 0 An SVC call exception is not pending. 1 An SVC call exception is pending. This bit can be modified to change the pending status of the SVC call exception.
14	BUSP	R/W	0	Bus Fault Pending Value Description 0 A bus fault exception is not pending. 1 A bus fault exception is pending. This bit can be modified to change the pending status of the bus fault exception.
13	MEMP	R/W	0	Memory Management Fault Pending Value Description 0 A memory management fault exception is not pending. 1 A memory management fault exception is pending. This bit can be modified to change the pending status of the memory management fault exception.
12	USAGEP	R/W	0	Usage Fault Pending Value Description 0 A usage fault exception is not pending. 1 A usage fault exception is pending. This bit can be modified to change the pending status of the usage fault exception.
11	TICK	R/W	0	SysTick Exception Active Value Description 0 A SysTick exception is not active. 1 A SysTick exception is active. This bit can be modified to change the active status of the SysTick exception, however, see the Caution above before setting this bit.

Bit/Field	Name	Type	Reset	Description
10	PNDSV	R/W	0	PendSV Exception Active Value Description 0 A PendSV exception is not active. 1 A PendSV exception is active. This bit can be modified to change the active status of the PendSV exception, however, see the Caution above before setting this bit.
9	reserved	RO	0	Software should not rely on the value of a reserved bit. To provide compatibility with future products, the value of a reserved bit should be preserved across a read-modify-write operation.
8	MON	R/W	0	Debug Monitor Active Value Description 0 The Debug monitor is not active. 1 The Debug monitor is active.
7	SVCA	R/W	0	SVC Call Active Value Description 0 SVC call is not active. 1 SVC call is active. This bit can be modified to change the active status of the SVC call exception, however, see the Caution above before setting this bit.
6:4	reserved	RO	0x0	Software should not rely on the value of a reserved bit. To provide compatibility with future products, the value of a reserved bit should be preserved across a read-modify-write operation.
3	USGA	R/W	0	Usage Fault Active Value Description 0 Usage fault is not active. 1 Usage fault is active. This bit can be modified to change the active status of the usage fault exception, however, see the Caution above before setting this bit.
2	reserved	RO	0	Software should not rely on the value of a reserved bit. To provide compatibility with future products, the value of a reserved bit should be preserved across a read-modify-write operation.
1	BUSA	R/W	0	Bus Fault Active Value Description 0 Bus fault is not active. 1 Bus fault is active. This bit can be modified to change the active status of the bus fault exception, however, see the Caution above before setting this bit.

Bit/Field	Name	Type	Reset	Description
0	MEMA	R/W	0	Memory Management Fault Active Value Description 0 Memory management fault is not active. 1 Memory management fault is active. This bit can be modified to change the active status of the memory management fault exception, however, see the Caution above before setting this bit.

Register 36: Configurable Fault Status (FAULTSTAT), offset 0xD28

Note: This register can only be accessed from privileged mode.

The **FAULTSTAT** register indicates the cause of a memory management fault, bus fault, or usage fault. Each of these functions is assigned to a subregister as follows:

- **Usage Fault Status (UFAULTSTAT)**, bits 31:16
- **Bus Fault Status (BFAULTSTAT)**, bits 15:8
- **Memory Management Fault Status (MFAULTSTAT)**, bits 7:0

FAULTSTAT is byte accessible. **FAULTSTAT** or its subregisters can be accessed as follows:

- The complete **FAULTSTAT** register, with a word access to offset 0xD28
- The **MFAULTSTAT**, with a byte access to offset 0xD28
- The **MFAULTSTAT** and **BFAULTSTAT**, with a halfword access to offset 0xD28
- The **BFAULTSTAT**, with a byte access to offset 0xD29
- The **UFAULTSTAT**, with a halfword access to offset 0xD2A

Bits are cleared by writing a 1 to them.

In a fault handler, the true faulting address can be determined by:

1. Read and save the **Memory Management Fault Address (MMADDR)** or **Bus Fault Address (FAULTADDR)** value.
2. Read the `MMARV` bit in **MFAULTSTAT**, or the `BFARV` bit in **BFAULTSTAT** to determine if the **MMADDR** or **FAULTADDR** contents are valid.

Software must follow this sequence because another higher priority exception might change the **MMADDR** or **FAULTADDR** value. For example, if a higher priority handler preempts the current fault handler, the other fault might change the **MMADDR** or **FAULTADDR** value.

Configurable Fault Status (FAULTSTAT)

Base 0xE000.E000
Offset 0xD28
Type R/W1C, reset 0x0000.0000

	31	30	29	28	27	26	25	24	23	22	21	20	19	18	17	16
	reserved						DIV0	UNALIGN	reserved				NOCP	INVPC	INVSTAT	UNDEF
Type	RO	RO	RO	RO	RO	RO	R/W1C	R/W1C	RO	RO	RO	RO	R/W1C	R/W1C	R/W1C	R/W1C
Reset	0	0	0	0	0	0	0	0	0	0	0	0	0	0	0	0

	15	14	13	12	11	10	9	8	7	6	5	4	3	2	1	0
	BFARV	reserved		BSTKE	BUSTKE	IMPRE	PRECISE	IBUS	MMARV	reserved		MSTKE	MUSTKE	reserved	DERR	IERR
Type	R/W1C	RO	RO	R/W1C	R/W1C	R/W1C	R/W1C	R/W1C	R/W1C	RO	RO	R/W1C	R/W1C	RO	R/W1C	R/W1C
Reset	0	0	0	0	0	0	0	0	0	0	0	0	0	0	0	0

Bit/Field	Name	Type	Reset	Description
31:26	reserved	RO	0x00	Software should not rely on the value of a reserved bit. To provide compatibility with future products, the value of a reserved bit should be preserved across a read-modify-write operation.

Bit/Field	Name	Type	Reset	Description
25	DIV0	R/W1C	0	Divide-by-Zero Usage Fault Value Description 0 No divide-by-zero fault has occurred, or divide-by-zero trapping is not enabled. 1 The processor has executed an `SDIV` or `UDIV` instruction with a divisor of 0. When this bit is set, the **PC** value stacked for the exception return points to the instruction that performed the divide by zero. Trapping on divide-by-zero is enabled by setting the `DIV0` bit in the **Configuration and Control (CFGCTRL)** register (see page 125). This bit is cleared by writing a 1 to it.
24	UNALIGN	R/W1C	0	Unaligned Access Usage Fault Value Description 0 No unaligned access fault has occurred, or unaligned access trapping is not enabled. 1 The processor has made an unaligned memory access. Unaligned `LDM`, `STM`, `LDRD`, and `STRD` instructions always fault regardless of the configuration of this bit. Trapping on unaligned access is enabled by setting the `UNALIGNED` bit in the **CFGCTRL** register (see page 125). This bit is cleared by writing a 1 to it.
23:20	reserved	RO	0x00	Software should not rely on the value of a reserved bit. To provide compatibility with future products, the value of a reserved bit should be preserved across a read-modify-write operation.
19	NOCP	R/W1C	0	No Coprocessor Usage Fault Value Description 0 A usage fault has not been caused by attempting to access a coprocessor. 1 The processor has attempted to access a coprocessor. This bit is cleared by writing a 1 to it.
18	INVPC	R/W1C	0	Invalid PC Load Usage Fault Value Description 0 A usage fault has not been caused by attempting to load an invalid **PC** value. 1 The processor has attempted an illegal load of EXC_RETURN to the **PC** as a result of an invalid context or an invalid EXC_RETURN value. When this bit is set, the **PC** value stacked for the exception return points to the instruction that tried to perform the illegal load of the **PC**. This bit is cleared by writing a 1 to it.

Bit/Field	Name	Type	Reset	Description
17	INVSTAT	R/W1C	0	Invalid State Usage Fault Value Description 0 A usage fault has not been caused by an invalid state. 1 The processor has attempted to execute an instruction that makes illegal use of the **EPSR** register. When this bit is set, the **PC** value stacked for the exception return points to the instruction that attempted the illegal use of the **Execution Program Status Register (EPSR)** register. This bit is not set if an undefined instruction uses the **EPSR** register. This bit is cleared by writing a 1 to it.
16	UNDEF	R/W1C	0	Undefined Instruction Usage Fault Value Description 0 A usage fault has not been caused by an undefined instruction. 1 The processor has attempted to execute an undefined instruction. When this bit is set, the **PC** value stacked for the exception return points to the undefined instruction. An undefined instruction is an instruction that the processor cannot decode. This bit is cleared by writing a 1 to it.
15	BFARV	R/W1C	0	Bus Fault Address Register Valid Value Description 0 The value in the **Bus Fault Address (FAULTADDR)** register is not a valid fault address. 1 The **FAULTADDR** register is holding a valid fault address. This bit is set after a bus fault, where the address is known. Other faults can clear this bit, such as a memory management fault occurring later. If a bus fault occurs and is escalated to a hard fault because of priority, the hard fault handler must clear this bit. This action prevents problems if returning to a stacked active bus fault handler whose **FAULTADDR** register value has been overwritten. This bit is cleared by writing a 1 to it.
14:13	reserved	RO	0	Software should not rely on the value of a reserved bit. To provide compatibility with future products, the value of a reserved bit should be preserved across a read-modify-write operation.

Bit/Field	Name	Type	Reset	Description
12	BSTKE	R/W1C	0	Stack Bus Fault Value Description 0 No bus fault has occurred on stacking for exception entry. 1 Stacking for an exception entry has caused one or more bus faults. When this bit is set, the **SP** is still adjusted but the values in the context area on the stack might be incorrect. A fault address is not written to the **FAULTADDR** register. This bit is cleared by writing a 1 to it.
11	BUSTKE	R/W1C	0	Unstack Bus Fault Value Description 0 No bus fault has occurred on unstacking for a return from exception. 1 Unstacking for a return from exception has caused one or more bus faults. This fault is chained to the handler. Thus, when this bit is set, the original return stack is still present. The **SP** is not adjusted from the failing return, a new save is not performed, and a fault address is not written to the **FAULTADDR** register. This bit is cleared by writing a 1 to it.
10	IMPRE	R/W1C	0	Imprecise Data Bus Error Value Description 0 An imprecise data bus error has not occurred. 1 A data bus error has occurred, but the return address in the stack frame is not related to the instruction that caused the error. When this bit is set, a fault address is not written to the **FAULTADDR** register. This fault is asynchronous. Therefore, if the fault is detected when the priority of the current process is higher than the bus fault priority, the bus fault becomes pending and becomes active only when the processor returns from all higher-priority processes. If a precise fault occurs before the processor enters the handler for the imprecise bus fault, the handler detects that both the `IMPRE` bit is set and one of the precise fault status bits is set. This bit is cleared by writing a 1 to it.
9	PRECISE	R/W1C	0	Precise Data Bus Error Value Description 0 A precise data bus error has not occurred. 1 A data bus error has occurred, and the **PC** value stacked for the exception return points to the instruction that caused the fault. When this bit is set, the fault address is written to the **FAULTADDR** register. This bit is cleared by writing a 1 to it.

Bit/Field	Name	Type	Reset	Description
8	IBUS	R/W1C	0	Instruction Bus Error Value Description 0 An instruction bus error has not occurred. 1 An instruction bus error has occurred. The processor detects the instruction bus error on prefetching an instruction, but sets this bit only if it attempts to issue the faulting instruction. When this bit is set, a fault address is not written to the **FAULTADDR** register. This bit is cleared by writing a 1 to it.
7	MMARV	R/W1C	0	Memory Management Fault Address Register Valid Value Description 0 The value in the **Memory Management Fault Address (MMADDR)** register is not a valid fault address. 1 The **MMADDR** register is holding a valid fault address. If a memory management fault occurs and is escalated to a hard fault because of priority, the hard fault handler must clear this bit. This action prevents problems if returning to a stacked active memory management fault handler whose **MMADDR** register value has been overwritten. This bit is cleared by writing a 1 to it.
6:5	reserved	RO	0	Software should not rely on the value of a reserved bit. To provide compatibility with future products, the value of a reserved bit should be preserved across a read-modify-write operation.
4	MSTKE	R/W1C	0	Stack Access Violation Value Description 0 No memory management fault has occurred on stacking for exception entry. 1 Stacking for an exception entry has caused one or more access violations. When this bit is set, the **SP** is still adjusted but the values in the context area on the stack might be incorrect. A fault address is not written to the **MMADDR** register. This bit is cleared by writing a 1 to it.

Bit/Field	Name	Type	Reset	Description
3	MUSTKE	R/W1C	0	Unstack Access Violation Value Description 0 No memory management fault has occurred on unstacking for a return from exception. 1 Unstacking for a return from exception has caused one or more access violations. This fault is chained to the handler. Thus, when this bit is set, the original return stack is still present. The **SP** is not adjusted from the failing return, a new save is not performed, and a fault address is not written to the **MMADDR** register. This bit is cleared by writing a 1 to it.
2	reserved	RO	0	Software should not rely on the value of a reserved bit. To provide compatibility with future products, the value of a reserved bit should be preserved across a read-modify-write operation.
1	DERR	R/W1C	0	Data Access Violation Value Description 0 A data access violation has not occurred. 1 The processor attempted a load or store at a location that does not permit the operation. When this bit is set, the **PC** value stacked for the exception return points to the faulting instruction and the address of the attempted access is written to the **MMADDR** register. This bit is cleared by writing a 1 to it.
0	IERR	R/W1C	0	Instruction Access Violation Value Description 0 An instruction access violation has not occurred. 1 The processor attempted an instruction fetch from a location that does not permit execution. This fault occurs on any access to an XN region, even when the MPU is disabled or not present. When this bit is set, the **PC** value stacked for the exception return points to the faulting instruction and the address of the attempted access is not written to the **MMADDR** register. This bit is cleared by writing a 1 to it.

Register 37: Hard Fault Status (HFAULTSTAT), offset 0xD2C

Note: This register can only be accessed from privileged mode.

The **HFAULTSTAT** register gives information about events that activate the hard fault handler.

Bits are cleared by writing a 1 to them.

Hard Fault Status (HFAULTSTAT)

Base 0xE000.E000
Offset 0xD2C
Type R/W1C, reset 0x0000.0000

	31	30	29	28	27	26	25	24	23	22	21	20	19	18	17	16
	DBG	FORCED	reserved													
Type	R/W1C	R/W1C	RO	RO	RO	RO	RO	RO	RO	RO	RO	RO	RO	RO	RO	RO
Reset	0	0	0	0	0	0	0	0	0	0	0	0	0	0	0	0

	15	14	13	12	11	10	9	8	7	6	5	4	3	2	1	0
	reserved														VECT	reserved
Type	RO	RO	RO	RO	RO	RO	RO	RO	RO	RO	RO	RO	RO	RO	R/W1C	RO
Reset	0	0	0	0	0	0	0	0	0	0	0	0	0	0	0	0

Bit/Field	Name	Type	Reset	Description
31	DBG	R/W1C	0	Debug Event This bit is reserved for Debug use. This bit must be written as a 0, otherwise behavior is unpredictable.
30	FORCED	R/W1C	0	Forced Hard Fault Value Description 0 No forced hard fault has occurred. 1 A forced hard fault has been generated by escalation of a fault with configurable priority that cannot be handled, either because of priority or because it is disabled. When this bit is set, the hard fault handler must read the other fault status registers to find the cause of the fault. This bit is cleared by writing a 1 to it.
29:2	reserved	RO	0x00	Software should not rely on the value of a reserved bit. To provide compatibility with future products, the value of a reserved bit should be preserved across a read-modify-write operation.
1	VECT	R/W1C	0	Vector Table Read Fault Value Description 0 No bus fault has occurred on a vector table read. 1 A bus fault occurred on a vector table read. This error is always handled by the hard fault handler. When this bit is set, the **PC** value stacked for the exception return points to the instruction that was preempted by the exception. This bit is cleared by writing a 1 to it.
0	reserved	RO	0	Software should not rely on the value of a reserved bit. To provide compatibility with future products, the value of a reserved bit should be preserved across a read-modify-write operation.

Register 38: Memory Management Fault Address (MMADDR), offset 0xD34

Note: This register can only be accessed from privileged mode.

The **MMADDR** register contains the address of the location that generated a memory management fault. When an unaligned access faults, the address in the **MMADDR** register is the actual address that faulted. Because a single read or write instruction can be split into multiple aligned accesses, the fault address can be any address in the range of the requested access size. Bits in the **Memory Management Fault Status (MFAULTSTAT)** register indicate the cause of the fault and whether the value in the **MMADDR** register is valid (see page 134).

Memory Management Fault Address (MMADDR)

Base 0xE000.E000
Offset 0xD34
Type R/W, reset -

	31	30	29	28	27	26	25	24	23	22	21	20	19	18	17	16
	ADDR															
Type	R/W	R/W	R/W	R/W	R/W	R/W	R/W	R/W	R/W	R/W	R/W	R/W	R/W	R/W	R/W	R/W
Reset	-	-	-	-	-	-	-	-	-	-	-	-	-	-	-	-

	15	14	13	12	11	10	9	8	7	6	5	4	3	2	1	0
	ADDR															
Type	R/W	R/W	R/W	R/W	R/W	R/W	R/W	R/W	R/W	R/W	R/W	R/W	R/W	R/W	R/W	R/W
Reset	-	-	-	-	-	-	-	-	-	-	-	-	-	-	-	-

Bit/Field	Name	Type	Reset	Description
31:0	ADDR	R/W	-	Fault Address When the `MMARV` bit of **MFAULTSTAT** is set, this field holds the address of the location that generated the memory management fault.

Register 39: Bus Fault Address (FAULTADDR), offset 0xD38

Note: This register can only be accessed from privileged mode.

The **FAULTADDR** register contains the address of the location that generated a bus fault. When an unaligned access faults, the address in the **FAULTADDR** register is the one requested by the instruction, even if it is not the address of the fault. Bits in the **Bus Fault Status (BFAULTSTAT)** register indicate the cause of the fault and whether the value in the **FAULTADDR** register is valid (see page 134).

Bus Fault Address (FAULTADDR)

Base 0xE000.E000
Offset 0xD38
Type R/W, reset -

	31	30	29	28	27	26	25	24	23	22	21	20	19	18	17	16
	ADDR															
Type	R/W	R/W	R/W	R/W	R/W	R/W	R/W	R/W	R/W	R/W	R/W	R/W	R/W	R/W	R/W	R/W
Reset	-	-	-	-	-	-	-	-	-	-	-	-	-	-	-	-

	15	14	13	12	11	10	9	8	7	6	5	4	3	2	1	0
	ADDR															
Type	R/W	R/W	R/W	R/W	R/W	R/W	R/W	R/W	R/W	R/W	R/W	R/W	R/W	R/W	R/W	R/W
Reset	-	-	-	-	-	-	-	-	-	-	-	-	-	-	-	-

Bit/Field	Name	Type	Reset	Description
31:0	ADDR	R/W	-	Fault Address When the FAULTADDRV bit of **BFAULTSTAT** is set, this field holds the address of the location that generated the bus fault.

3.6 Memory Protection Unit (MPU) Register Descriptions

This section lists and describes the Memory Protection Unit (MPU) registers, in numerical order by address offset.

The MPU registers can only be accessed from privileged mode.

Register 40: MPU Type (MPUTYPE), offset 0xD90

Note: This register can only be accessed from privileged mode.

The **MPUTYPE** register indicates whether the MPU is present, and if so, how many regions it supports.

MPU Type (MPUTYPE)

Base 0xE000.E000
Offset 0xD90
Type RO, reset 0x0000.0800

	31	30	29	28	27	26	25	24	23	22	21	20	19	18	17	16
	reserved								IREGION							
Type	RO	RO	RO	RO	RO	RO	RO	RO	RO	RO	RO	RO	RO	RO	RO	RO
Reset	0	0	0	0	0	0	0	0	0	0	0	0	0	0	0	0

	15	14	13	12	11	10	9	8	7	6	5	4	3	2	1	0
	DREGION								reserved							SEPARATE
Type	RO	RO	RO	RO	RO	RO	RO	RO	RO	RO	RO	RO	RO	RO	RO	RO
Reset	0	0	0	0	1	0	0	0	0	0	0	0	0	0	0	0

Bit/Field	Name	Type	Reset	Description
31:24	reserved	RO	0x00	Software should not rely on the value of a reserved bit. To provide compatibility with future products, the value of a reserved bit should be preserved across a read-modify-write operation.
23:16	IREGION	RO	0x00	Number of I Regions This field indicates the number of supported MPU instruction regions. This field always contains 0x00. The MPU memory map is unified and is described by the `DREGION` field.
15:8	DREGION	RO	0x08	Number of D Regions Value Description 0x08 Indicates there are eight supported MPU data regions.
7:1	reserved	RO	0x00	Software should not rely on the value of a reserved bit. To provide compatibility with future products, the value of a reserved bit should be preserved across a read-modify-write operation.
0	SEPARATE	RO	0	Separate or Unified MPU Value Description 0 Indicates the MPU is unified.

Register 41: MPU Control (MPUCTRL), offset 0xD94

Note: This register can only be accessed from privileged mode.

The **MPUCTRL** register enables the MPU, enables the default memory map background region, and enables use of the MPU when in the hard fault, Non-maskable Interrupt (NMI), and **Fault Mask Register (FAULTMASK)** escalated handlers.

When the `ENABLE` and `PRIVDEFEN` bits are both set:

- For privileged accesses, the default memory map is as described in "Memory Model" on page 65. Any access by privileged software that does not address an enabled memory region behaves as defined by the default memory map.
- Any access by unprivileged software that does not address an enabled memory region causes a memory management fault.

Execute Never (XN) and Strongly Ordered rules always apply to the System Control Space regardless of the value of the `ENABLE` bit.

When the `ENABLE` bit is set, at least one region of the memory map must be enabled for the system to function unless the `PRIVDEFEN` bit is set. If the `PRIVDEFEN` bit is set and no regions are enabled, then only privileged software can operate.

When the `ENABLE` bit is clear, the system uses the default memory map, which has the same memory attributes as if the MPU is not implemented (see Table 2-5 on page 67 for more information). The default memory map applies to accesses from both privileged and unprivileged software.

When the MPU is enabled, accesses to the System Control Space and vector table are always permitted. Other areas are accessible based on regions and whether `PRIVDEFEN` is set.

Unless `HFNMIENA` is set, the MPU is not enabled when the processor is executing the handler for an exception with priority –1 or –2. These priorities are only possible when handling a hard fault or NMI exception or when **FAULTMASK** is enabled. Setting the `HFNMIENA` bit enables the MPU when operating with these two priorities.

MPU Control (MPUCTRL)

Base 0xE000.E000
Offset 0xD94
Type R/W, reset 0x0000.0000

	31	30	29	28	27	26	25	24	23	22	21	20	19	18	17	16
	reserved															
Type	RO	RO	RO	RO	RO	RO	RO	RO	RO	RO	RO	RO	RO	RO	RO	RO
Reset	0	0	0	0	0	0	0	0	0	0	0	0	0	0	0	0

	15	14	13	12	11	10	9	8	7	6	5	4	3	2	1	0
	reserved													PRIVDEFEN	HFNMIENA	ENABLE
Type	RO	RO	RO	RO	RO	RO	RO	RO	RO	RO	RO	RO	RO	R/W	R/W	R/W
Reset	0	0	0	0	0	0	0	0	0	0	0	0	0	0	0	0

Bit/Field	Name	Type	Reset	Description
31:3	reserved	RO	0x0000.000	Software should not rely on the value of a reserved bit. To provide compatibility with future products, the value of a reserved bit should be preserved across a read-modify-write operation.

Bit/Field	Name	Type	Reset	Description
2	PRIVDEFEN	R/W	0	MPU Default Region This bit enables privileged software access to the default memory map. Value Description 0 If the MPU is enabled, this bit disables use of the default memory map. Any memory access to a location not covered by any enabled region causes a fault. 1 If the MPU is enabled, this bit enables use of the default memory map as a background region for privileged software accesses. When this bit is set, the background region acts as if it is region number -1. Any region that is defined and enabled has priority over this default map. If the MPU is disabled, the processor ignores this bit.
1	HFNMIENA	R/W	0	MPU Enabled During Faults This bit controls the operation of the MPU during hard fault, NMI, and **FAULTMASK** handlers. Value Description 0 The MPU is disabled during hard fault, NMI, and **FAULTMASK** handlers, regardless of the value of the `ENABLE` bit. 1 The MPU is enabled during hard fault, NMI, and **FAULTMASK** handlers. When the MPU is disabled and this bit is set, the resulting behavior is unpredictable.
0	ENABLE	R/W	0	MPU Enable Value Description 0 The MPU is disabled. 1 The MPU is enabled. When the MPU is disabled and the `HFNMIENA` bit is set, the resulting behavior is unpredictable.

Register 42: MPU Region Number (MPUNUMBER), offset 0xD98

Note: This register can only be accessed from privileged mode.

The **MPUNUMBER** register selects which memory region is referenced by the **MPU Region Base Address (MPUBASE)** and **MPU Region Attribute and Size (MPUATTR)** registers. Normally, the required region number should be written to this register before accessing the **MPUBASE** or the **MPUATTR** register. However, the region number can be changed by writing to the **MPUBASE** register with the `VALID` bit set (see page 147). This write updates the value of the `REGION` field.

MPU Region Number (MPUNUMBER)

Base 0xE000.E000
Offset 0xD98
Type R/W, reset 0x0000.0000

	31	30	29	28	27	26	25	24	23	22	21	20	19	18	17	16
	reserved															
Type	RO	RO	RO	RO	RO	RO	RO	RO	RO	RO	RO	RO	RO	RO	RO	RO
Reset	0	0	0	0	0	0	0	0	0	0	0	0	0	0	0	0

	15	14	13	12	11	10	9	8	7	6	5	4	3	2	1	0
	reserved													NUMBER		
Type	RO	RO	RO	RO	RO	RO	RO	RO	RO	RO	RO	RO	RO	R/W	R/W	R/W
Reset	0	0	0	0	0	0	0	0	0	0	0	0	0	0	0	0

Bit/Field	Name	Type	Reset	Description
31:3	reserved	RO	0x0000.000	Software should not rely on the value of a reserved bit. To provide compatibility with future products, the value of a reserved bit should be preserved across a read-modify-write operation.
2:0	NUMBER	R/W	0x0	MPU Region to Access This field indicates the MPU region referenced by the **MPUBASE** and **MPUATTR** registers. The MPU supports eight memory regions.

Register 43: MPU Region Base Address (MPUBASE), offset 0xD9C

Register 44: MPU Region Base Address Alias 1 (MPUBASE1), offset 0xDA4

Register 45: MPU Region Base Address Alias 2 (MPUBASE2), offset 0xDAC

Register 46: MPU Region Base Address Alias 3 (MPUBASE3), offset 0xDB4

Note: This register can only be accessed from privileged mode.

The **MPUBASE** register defines the base address of the MPU region selected by the **MPU Region Number (MPUNUMBER)** register and can update the value of the **MPUNUMBER** register. To change the current region number and update the **MPUNUMBER** register, write the **MPUBASE** register with the `VALID` bit set.

The `ADDR` field is bits 31:*N* of the **MPUBASE** register. Bits (*N*-1):5 are reserved. The region size, as specified by the `SIZE` field in the **MPU Region Attribute and Size (MPUATTR)** register, defines the value of *N* where:

$$N = \mathrm{Log}_2(\text{Region size in bytes})$$

If the region size is configured to 4 GB in the **MPUATTR** register, there is no valid `ADDR` field. In this case, the region occupies the complete memory map, and the base address is 0x0000.0000.

The base address is aligned to the size of the region. For example, a 64-KB region must be aligned on a multiple of 64 KB, for example, at 0x0001.0000 or 0x0002.0000.

MPU Region Base Address (MPUBASE)

Base 0xE000.E000
Offset 0xD9C
Type R/W, reset 0x0000.0000

	31	30	29	28	27	26	25	24	23	22	21	20	19	18	17	16
	ADDR															
Type	R/W	R/W	R/W	R/W	R/W	R/W	R/W	R/W	R/W	R/W	R/W	R/W	R/W	R/W	R/W	R/W
Reset	0	0	0	0	0	0	0	0	0	0	0	0	0	0	0	0

	15	14	13	12	11	10	9	8	7	6	5	4	3	2	1	0
	ADDR											VALID	reserved	REGION		
Type	R/W	R/W	R/W	R/W	R/W	R/W	R/W	R/W	R/W	R/W	R/W	WO	RO	R/W	R/W	R/W
Reset	0	0	0	0	0	0	0	0	0	0	0	0	0	0	0	0

Bit/Field	Name	Type	Reset	Description
31:5	ADDR	R/W	0x0000.000	Base Address Mask Bits 31:*N* in this field contain the region base address. The value of *N* depends on the region size, as shown above. The remaining bits (*N*-1):5 are reserved. Software should not rely on the value of a reserved bit. To provide compatibility with future products, the value of a reserved bit should be preserved across a read-modify-write operation.

Bit/Field	Name	Type	Reset	Description
4	VALID	WO	0	Region Number Valid Value Description 0 The **MPUNUMBER** register is not changed and the processor updates the base address for the region specified in the **MPUNUMBER** register and ignores the value of the `REGION` field. 1 The **MPUNUMBER** register is updated with the value of the `REGION` field and the base address is updated for the region specified in the `REGION` field. This bit is always read as 0.
3	reserved	RO	0	Software should not rely on the value of a reserved bit. To provide compatibility with future products, the value of a reserved bit should be preserved across a read-modify-write operation.
2:0	REGION	R/W	0x0	Region Number On a write, contains the value to be written to the **MPUNUMBER** register. On a read, returns the current region number in the **MPUNUMBER** register.

Register 47: MPU Region Attribute and Size (MPUATTR), offset 0xDA0

Register 48: MPU Region Attribute and Size Alias 1 (MPUATTR1), offset 0xDA8

Register 49: MPU Region Attribute and Size Alias 2 (MPUATTR2), offset 0xDB0

Register 50: MPU Region Attribute and Size Alias 3 (MPUATTR3), offset 0xDB8

Note: This register can only be accessed from privileged mode.

The **MPUATTR** register defines the region size and memory attributes of the MPU region specified by the **MPU Region Number (MPUNUMBER)** register and enables that region and any subregions.

The **MPUATTR** register is accessible using word or halfword accesses with the most-significant halfword holding the region attributes and the least-significant halfword holds the region size and the region and subregion enable bits.

The MPU access permission attribute bits, `XN`, `AP`, `TEX`, `S`, `C`, and `B`, control access to the corresponding memory region. If an access is made to an area of memory without the required permissions, then the MPU generates a permission fault.

The `SIZE` field defines the size of the MPU memory region specified by the **MPUNUMBER** register as follows:

(Region size in bytes) = $2^{(SIZE+1)}$

The smallest permitted region size is 32 bytes, corresponding to a `SIZE` value of `4`. Table 3-9 on page 149 gives example `SIZE` values with the corresponding region size and value of N in the **MPU Region Base Address (MPUBASE)** register.

Table 3-9. Example SIZE Field Values

`SIZE` Encoding	Region Size	Value of N[a]	Note
00100b (0x4)	32 B	5	Minimum permitted size
01001b (0x9)	1 KB	10	-
10011b (0x13)	1 MB	20	-
11101b (0x1D)	1 GB	30	-
11111b (0x1F)	4 GB	No valid ADDR field in **MPUBASE**; the region occupies the complete memory map.	Maximum possible size

a. Refers to the N parameter in the **MPUBASE** register (see page 147).

MPU Region Attribute and Size (MPUATTR)

Base 0xE000.E000
Offset 0xDA0
Type R/W, reset 0x0000.0000

	31	30	29	28	27	26	25	24	23	22	21	20	19	18	17	16
	reserved			XN	reserved	AP			reserved		TEX			S	C	B
Type	RO	RO	RO	R/W	RO	R/W	R/W	R/W	RO	RO	R/W	R/W	R/W	R/W	R/W	R/W
Reset	0	0	0	0	0	0	0	0	0	0	0	0	0	0	0	0

	15	14	13	12	11	10	9	8	7	6	5	4	3	2	1	0
	SRD								reserved		SIZE					ENABLE
Type	R/W	R/W	R/W	R/W	R/W	R/W	R/W	R/W	RO	RO	R/W	R/W	R/W	R/W	R/W	R/W
Reset	0	0	0	0	0	0	0	0	0	0	0	0	0	0	0	0

Bit/Field	Name	Type	Reset	Description
31:29	reserved	RO	0x00	Software should not rely on the value of a reserved bit. To provide compatibility with future products, the value of a reserved bit should be preserved across a read-modify-write operation.
28	XN	R/W	0	Instruction Access Disable Value Description 0 Instruction fetches are enabled. 1 Instruction fetches are disabled.
27	reserved	RO	0	Software should not rely on the value of a reserved bit. To provide compatibility with future products, the value of a reserved bit should be preserved across a read-modify-write operation.
26:24	AP	R/W	0	Access Privilege For information on using this bit field, see Table 3-5 on page 95.
23:22	reserved	RO	0x0	Software should not rely on the value of a reserved bit. To provide compatibility with future products, the value of a reserved bit should be preserved across a read-modify-write operation.
21:19	TEX	R/W	0x0	Type Extension Mask For information on using this bit field, see Table 3-3 on page 94.
18	S	R/W	0	Shareable For information on using this bit, see Table 3-3 on page 94.
17	C	R/W	0	Cacheable For information on using this bit, see Table 3-3 on page 94.
16	B	R/W	0	Bufferable For information on using this bit, see Table 3-3 on page 94.
15:8	SRD	R/W	0x00	Subregion Disable Bits Value Description 0 The corresponding subregion is enabled. 1 The corresponding subregion is disabled. Region sizes of 128 bytes and less do not support subregions. When writing the attributes for such a region, configure the `SRD` field as 0x00. See the section called “Subregions” on page 93 for more information.
7:6	reserved	RO	0x0	Software should not rely on the value of a reserved bit. To provide compatibility with future products, the value of a reserved bit should be preserved across a read-modify-write operation.
5:1	SIZE	R/W	0x0	Region Size Mask The `SIZE` field defines the size of the MPU memory region specified by the **MPUNUMBER** register. Refer to Table 3-9 on page 149 for more information.

Bit/Field	Name	Type	Reset	Description
0	ENABLE	R/W	0	Region Enable Value Description 0 The region is disabled. 1 The region is enabled.

4 JTAG Interface

The Joint Test Action Group (JTAG) port is an IEEE standard that defines a Test Access Port and Boundary Scan Architecture for digital integrated circuits and provides a standardized serial interface for controlling the associated test logic. The TAP, Instruction Register (IR), and Data Registers (DR) can be used to test the interconnections of assembled printed circuit boards and obtain manufacturing information on the components. The JTAG Port also provides a means of accessing and controlling design-for-test features such as I/O pin observation and control, scan testing, and debugging.

The JTAG port is comprised of five pins: $\overline{\text{TRST}}$, TCK, TMS, TDI, and TDO. Data is transmitted serially into the controller on TDI and out of the controller on TDO. The interpretation of this data is dependent on the current state of the TAP controller. For detailed information on the operation of the JTAG port and TAP controller, please refer to the *IEEE Standard 1149.1-Test Access Port and Boundary-Scan Architecture*.

The Stellaris® JTAG controller works with the ARM JTAG controller built into the Cortex-M3 core. This is implemented by multiplexing the TDO outputs from both JTAG controllers. ARM JTAG instructions select the ARM TDO output while Stellaris JTAG instructions select the Stellaris TDO outputs. The multiplexer is controlled by the Stellaris JTAG controller, which has comprehensive programming for the ARM, Stellaris, and unimplemented JTAG instructions.

The Stellaris JTAG module has the following features:

- IEEE 1149.1-1990 compatible Test Access Port (TAP) controller
- Four-bit Instruction Register (IR) chain for storing JTAG instructions
- IEEE standard instructions: BYPASS, IDCODE, SAMPLE/PRELOAD, EXTEST and INTEST
- ARM additional instructions: APACC, DPACC and ABORT
- Integrated ARM Serial Wire Debug (SWD)

See the *ARM® Debug Interface V5 Architecture Specification* for more information on the ARM JTAG controller.

4.1 Block Diagram

Figure 4-1. JTAG Module Block Diagram

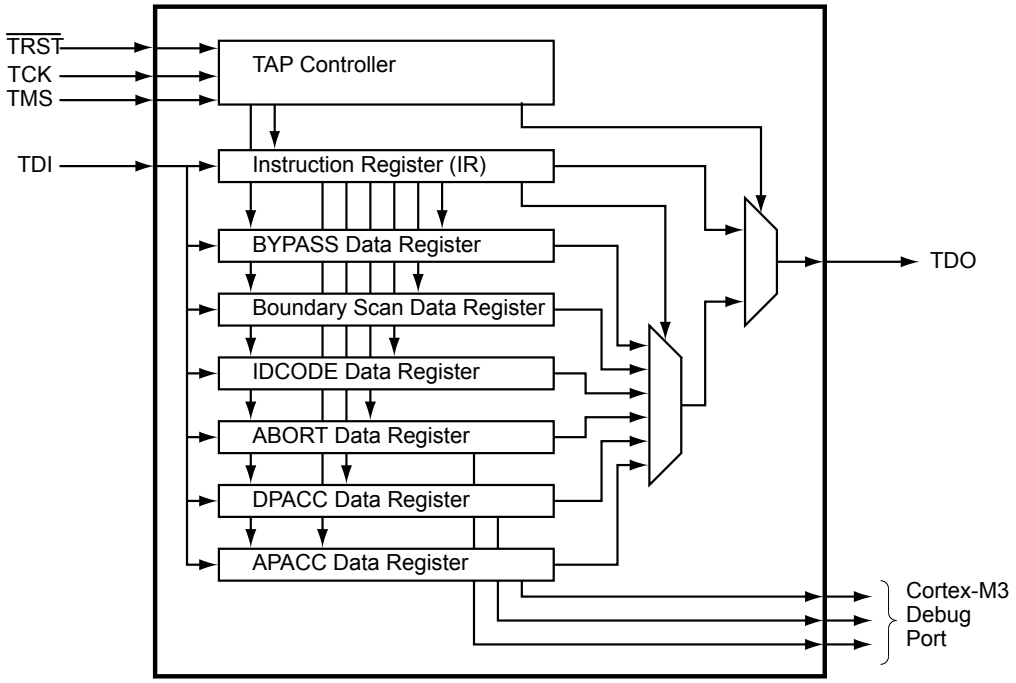

4.2 Signal Description

Table 4-1 on page 153 and Table 4-2 on page 154 list the external signals of the JTAG/SWD controller and describe the function of each. The JTAG/SWD controller signals are alternate functions for some GPIO signals, however note that the reset state of the pins is for the JTAG/SWD function. The JTAG/SWD controller signals are under commit protection and require a special process to be configured as GPIOs, see “Commit Control” on page 288. The column in the table below titled "Pin Assignment" lists the GPIO pin placement for the JTAG/SWD controller signals. The AFSEL bit in the **GPIO Alternate Function Select (GPIOAFSEL)** register (page 301) is set to choose the JTAG/SWD function. For more information on configuring GPIOs, see “General-Purpose Input/Outputs (GPIOs)” on page 278.

Table 4-1. JTAG_SWD_SWO Signals (100LQFP)

Pin Name	Pin Number	Pin Type	Buffer Type[a]	Description
SWCLK	80	I	TTL	JTAG/SWD CLK.
SWDIO	79	I/O	TTL	JTAG TMS and SWDIO.
SWO	77	O	TTL	JTAG TDO and SWO.
TCK	80	I	TTL	JTAG/SWD CLK.
TDI	78	I	TTL	JTAG TDI.
TDO	77	O	TTL	JTAG TDO and SWO.
TMS	79	I/O	TTL	JTAG TMS and SWDIO.
TRST	89	I	TTL	JTAG TRST.

a. The TTL designation indicates the pin has TTL-compatible voltage levels.

Table 4-2. JTAG_SWD_SWO Signals (108BGA)

Pin Name	Pin Number	Pin Type	Buffer Type[a]	Description
SWCLK	A9	I	TTL	JTAG/SWD CLK.
SWDIO	B9	I/O	TTL	JTAG TMS and SWDIO.
SWO	A10	O	TTL	JTAG TDO and SWO.
TCK	A9	I	TTL	JTAG/SWD CLK.
TDI	B8	I	TTL	JTAG TDI.
TDO	A10	O	TTL	JTAG TDO and SWO.
TMS	B9	I/O	TTL	JTAG TMS and SWDIO.
$\overline{\text{TRST}}$	A8	I	TTL	JTAG $\overline{\text{TRST}}$.

a. The TTL designation indicates the pin has TTL-compatible voltage levels.

4.3 Functional Description

A high-level conceptual drawing of the JTAG module is shown in Figure 4-1 on page 153. The JTAG module is composed of the Test Access Port (TAP) controller and serial shift chains with parallel update registers. The TAP controller is a simple state machine controlled by the $\overline{\text{TRST}}$, TCK and TMS inputs. The current state of the TAP controller depends on the current value of $\overline{\text{TRST}}$ and the sequence of values captured on TMS at the rising edge of TCK. The TAP controller determines when the serial shift chains capture new data, shift data from TDI towards TDO, and update the parallel load registers. The current state of the TAP controller also determines whether the Instruction Register (IR) chain or one of the Data Register (DR) chains is being accessed.

The serial shift chains with parallel load registers are comprised of a single Instruction Register (IR) chain and multiple Data Register (DR) chains. The current instruction loaded in the parallel load register determines which DR chain is captured, shifted, or updated during the sequencing of the TAP controller.

Some instructions, like EXTEST and INTEST, operate on data currently in a DR chain and do not capture, shift, or update any of the chains. Instructions that are not implemented decode to the BYPASS instruction to ensure that the serial path between TDI and TDO is always connected (see Table 4-4 on page 160 for a list of implemented instructions).

See “JTAG and Boundary Scan” on page 599 for JTAG timing diagrams.

4.3.1 JTAG Interface Pins

The JTAG interface consists of five standard pins: $\overline{\text{TRST}}$,TCK, TMS, TDI, and TDO. These pins and their associated reset state are given in Table 4-3 on page 154. Detailed information on each pin follows.

Table 4-3. JTAG Port Pins Reset State

Pin Name	Data Direction	Internal Pull-Up	Internal Pull-Down	Drive Strength	Drive Value
$\overline{\text{TRST}}$	Input	Enabled	Disabled	N/A	N/A
TCK	Input	Enabled	Disabled	N/A	N/A
TMS	Input	Enabled	Disabled	N/A	N/A
TDI	Input	Enabled	Disabled	N/A	N/A
TDO	Output	Enabled	Disabled	2-mA driver	High-Z

4.3.1.1 Test Reset Input ($\overline{\text{TRST}}$)

The $\overline{\text{TRST}}$ pin is an asynchronous active Low input signal for initializing and resetting the JTAG TAP controller and associated JTAG circuitry. When $\overline{\text{TRST}}$ is asserted, the TAP controller resets to the Test-Logic-Reset state and remains there while $\overline{\text{TRST}}$ is asserted. When the TAP controller enters the Test-Logic-Reset state, the JTAG Instruction Register (IR) resets to the default instruction, IDCODE.

By default, the internal pull-up resistor on the $\overline{\text{TRST}}$ pin is enabled after reset. Changes to the pull-up resistor settings on GPIO Port B should ensure that the internal pull-up resistor remains enabled on PB7/$\overline{\text{TRST}}$; otherwise JTAG communication could be lost.

4.3.1.2 Test Clock Input (TCK)

The TCK pin is the clock for the JTAG module. This clock is provided so the test logic can operate independently of any other system clocks. In addition, it ensures that multiple JTAG TAP controllers that are daisy-chained together can synchronously communicate serial test data between components. During normal operation, TCK is driven by a free-running clock with a nominal 50% duty cycle. When necessary, TCK can be stopped at 0 or 1 for extended periods of time. While TCK is stopped at 0 or 1, the state of the TAP controller does not change and data in the JTAG Instruction and Data Registers is not lost.

By default, the internal pull-up resistor on the TCK pin is enabled after reset. This assures that no clocking occurs if the pin is not driven from an external source. The internal pull-up and pull-down resistors can be turned off to save internal power as long as the TCK pin is constantly being driven by an external source.

4.3.1.3 Test Mode Select (TMS)

The TMS pin selects the next state of the JTAG TAP controller. TMS is sampled on the rising edge of TCK. Depending on the current TAP state and the sampled value of TMS, the next state is entered. Because the TMS pin is sampled on the rising edge of TCK, the *IEEE Standard 1149.1* expects the value on TMS to change on the falling edge of TCK.

Holding TMS high for five consecutive TCK cycles drives the TAP controller state machine to the Test-Logic-Reset state. When the TAP controller enters the Test-Logic-Reset state, the JTAG Instruction Register (IR) resets to the default instruction, IDCODE. Therefore, this sequence can be used as a reset mechanism, similar to asserting $\overline{\text{TRST}}$. The JTAG Test Access Port state machine can be seen in its entirety in Figure 4-2 on page 157.

By default, the internal pull-up resistor on the TMS pin is enabled after reset. Changes to the pull-up resistor settings on GPIO Port C should ensure that the internal pull-up resistor remains enabled on PC1/TMS; otherwise JTAG communication could be lost.

4.3.1.4 Test Data Input (TDI)

The TDI pin provides a stream of serial information to the IR chain and the DR chains. TDI is sampled on the rising edge of TCK and, depending on the current TAP state and the current instruction, presents this data to the proper shift register chain. Because the TDI pin is sampled on the rising edge of TCK, the *IEEE Standard 1149.1* expects the value on TDI to change on the falling edge of TCK.

By default, the internal pull-up resistor on the TDI pin is enabled after reset. Changes to the pull-up resistor settings on GPIO Port C should ensure that the internal pull-up resistor remains enabled on PC2/TDI; otherwise JTAG communication could be lost.

4.3.1.5 Test Data Output (TDO)

The TDO pin provides an output stream of serial information from the IR chain or the DR chains. The value of TDO depends on the current TAP state, the current instruction, and the data in the chain being accessed. In order to save power when the JTAG port is not being used, the TDO pin is placed in an inactive drive state when not actively shifting out data. Because TDO can be connected to the TDI of another controller in a daisy-chain configuration, the *IEEE Standard 1149.1* expects the value on TDO to change on the falling edge of TCK.

By default, the internal pull-up resistor on the TDO pin is enabled after reset. This assures that the pin remains at a constant logic level when the JTAG port is not being used. The internal pull-up and pull-down resistors can be turned off to save internal power if a High-Z output value is acceptable during certain TAP controller states.

4.3.2 JTAG TAP Controller

The JTAG TAP controller state machine is shown in Figure 4-2 on page 157. The TAP controller state machine is reset to the Test-Logic-Reset state on the assertion of a Power-On-Reset (POR) or the assertion of $\overline{\text{TRST}}$. Asserting the correct sequence on the TMS pin allows the JTAG module to shift in new instructions, shift in data, or idle during extended testing sequences. For detailed information on the function of the TAP controller and the operations that occur in each state, please refer to *IEEE Standard 1149.1*.

Figure 4-2. Test Access Port State Machine

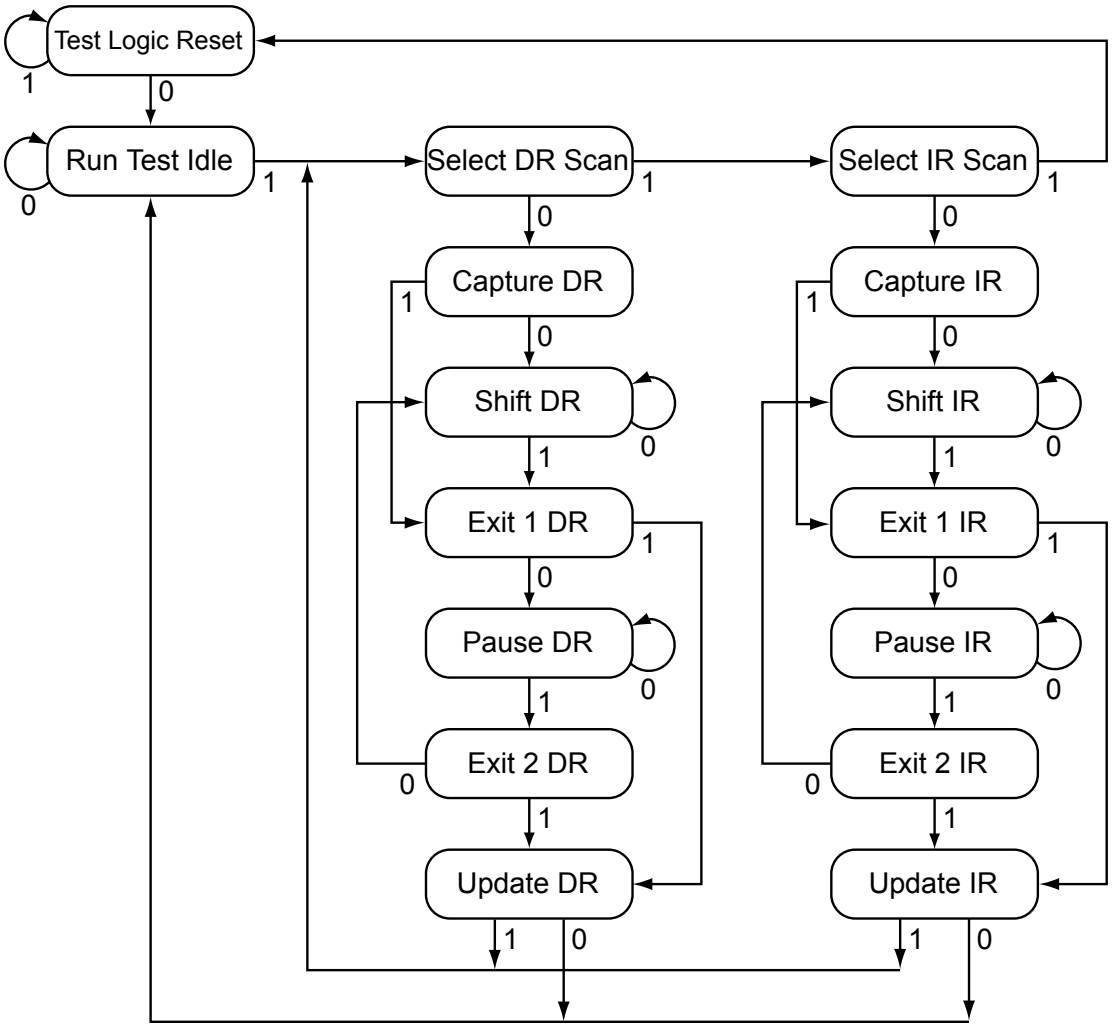

4.3.3 Shift Registers

The Shift Registers consist of a serial shift register chain and a parallel load register. The serial shift register chain samples specific information during the TAP controller's CAPTURE states and allows this information to be shifted out of `TDO` during the TAP controller's SHIFT states. While the sampled data is being shifted out of the chain on `TDO`, new data is being shifted into the serial shift register on `TDI`. This new data is stored in the parallel load register during the TAP controller's UPDATE states. Each of the shift registers is discussed in detail in "Register Descriptions" on page 160.

4.3.4 Operational Considerations

There are certain operational considerations when using the JTAG module. Because the JTAG pins can be programmed to be GPIOs, board configuration and reset conditions on these pins must be considered. In addition, because the JTAG module has integrated ARM Serial Wire Debug, the method for switching between these two operational modes is described below.

4.3.4.1 GPIO Functionality

When the controller is reset with either a POR or $\overline{\text{RST}}$, the JTAG/SWD port pins default to their JTAG/SWD configurations. The default configuration includes enabling digital functionality (setting **GPIODEN** to 1), enabling the pull-up resistors (setting **GPIOPUR** to 1), and enabling the alternate hardware function (setting **GPIOAFSEL** to 1) for the `PB7` and `PC[3:0]` JTAG/SWD pins.

It is possible for software to configure these pins as GPIOs after reset by writing 0s to `PB7` and `PC[3:0]` in the **GPIOAFSEL** register. If the user does not require the JTAG/SWD port for debugging or board-level testing, this provides five more GPIOs for use in the design.

Caution – It is possible to create a software sequence that prevents the debugger from connecting to the Stellaris microcontroller. If the program code loaded into flash immediately changes the JTAG pins to their GPIO functionality, the debugger may not have enough time to connect and halt the controller before the JTAG pin functionality switches. This may lock the debugger out of the part. This can be avoided with a software routine that restores JTAG functionality based on an external or software trigger.

The GPIO commit control registers provide a layer of protection against accidental programming of critical hardware peripherals. Protection is currently provided for the five JTAG/SWD pins (`PB7` and `PC[3:0]`). Writes to protected bits of the **GPIO Alternate Function Select (GPIOAFSEL)** register (see page 301) are not committed to storage unless the **GPIO Lock (GPIOLOCK)** register (see page 311) has been unlocked and the appropriate bits of the **GPIO Commit (GPIOCR)** register (see page 312) have been set to 1.

Recovering a "Locked" Device

Note: The mass erase of the flash memory caused by the below sequence erases the entire flash memory, regardless of the settings in the **Flash Memory Protection Program Enable n (FMPPEn)** registers. Performing the sequence below does not affect the nonvolatile registers discussed in “Nonvolatile Register Programming” on page 255.

If software configures any of the JTAG/SWD pins as GPIO and loses the ability to communicate with the debugger, there is a debug sequence that can be used to recover the device. Performing a total of ten JTAG-to-SWD and SWD-to-JTAG switch sequences while holding the device in reset mass erases the flash memory. The sequence to recover the device is:

1. Assert and hold the $\overline{\text{RST}}$ signal.
2. Perform the JTAG-to-SWD switch sequence.
3. Perform the SWD-to-JTAG switch sequence.
4. Perform the JTAG-to-SWD switch sequence.
5. Perform the SWD-to-JTAG switch sequence.
6. Perform the JTAG-to-SWD switch sequence.
7. Perform the SWD-to-JTAG switch sequence.
8. Perform the JTAG-to-SWD switch sequence.
9. Perform the SWD-to-JTAG switch sequence.
10. Perform the JTAG-to-SWD switch sequence.

11. Perform the SWD-to-JTAG switch sequence.
12. Release the $\overline{\text{RST}}$ signal.
13. Wait 400 ms.
14. Power-cycle the device.

The JTAG-to-SWD and SWD-to-JTAG switch sequences are described in "ARM Serial Wire Debug (SWD)" on page 159. When performing switch sequences for the purpose of recovering the debug capabilities of the device, only steps 1 and 2 of the switch sequence in the section called "JTAG-to-SWD Switching" on page 159 must be performed.

4.3.4.2 Communication with JTAG/SWD

Because the debug clock and the system clock can be running at different frequencies, care must be taken to maintain reliable communication with the JTAG/SWD interface. In the Capture-DR state, the result of the previous transaction, if any, is returned, together with a 3-bit ACK response. Software should check the ACK response to see if the previous operation has completed before initiating a new transaction. Alternatively, if the system clock is at least 8 times faster than the debug clock (`TCK` or `SWCLK`), the previous operation has enough time to complete and the ACK bits do not have to be checked.

4.3.4.3 ARM Serial Wire Debug (SWD)

In order to seamlessly integrate the ARM Serial Wire Debug (SWD) functionality, a serial-wire debugger must be able to connect to the Cortex-M3 core without having to perform, or have any knowledge of, JTAG cycles. This is accomplished with a SWD preamble that is issued before the SWD session begins.

The switching preamble used to enable the SWD interface of the SWJ-DP module starts with the TAP controller in the Test-Logic-Reset state. From here, the preamble sequences the TAP controller through the following states: Run Test Idle, Select DR, Select IR, Test Logic Reset, Test Logic Reset, Run Test Idle, Run Test Idle, Select DR, Select IR, Test Logic Reset, Test Logic Reset, Run Test Idle, Run Test Idle, Select DR, Select IR, and Test Logic Reset states.

Stepping through this sequences of the TAP state machine enables the SWD interface and disables the JTAG interface. For more information on this operation and the SWD interface, see the *ARM® Debug Interface V5 Architecture Specification*.

Because this sequence is a valid series of JTAG operations that could be issued, the ARM JTAG TAP controller is not fully compliant to the *IEEE Standard 1149.1*. This is the only instance where the ARM JTAG TAP controller does not meet full compliance with the specification. Due to the low probability of this sequence occurring during normal operation of the TAP controller, it should not affect normal performance of the JTAG interface.

JTAG-to-SWD Switching

To switch the operating mode of the Debug Access Port (DAP) from JTAG to SWD mode, the external debug hardware must send the switching preamble to the device. The 16-bit switch sequence for switching to SWD mode is defined as b1110011110011110, transmitted LSB first. This can also be represented as 16'hE79E when transmitted LSB first. The complete switch sequence should consist of the following transactions on the `TCK/SWCLK` and `TMS/SWDIO` signals:

1. Send at least 50 `TCK/SWCLK` cycles with `TMS/SWDIO` set to 1. This ensures that both JTAG and SWD are in their reset/idle states.

2. Send the 16-bit JTAG-to-SWD switch sequence, 16'hE79E.

3. Send at least 50 TCK/SWCLK cycles with TMS/SWDIO set to 1. This ensures that if SWJ-DP was already in SWD mode, before sending the switch sequence, the SWD goes into the line reset state.

SWD-to-JTAG Switching

To switch the operating mode of the Debug Access Port (DAP) from SWD to JTAG mode, the external debug hardware must send a switch sequence to the device. The 16-bit switch sequence for switching to JTAG mode is defined as b1110011100111100, transmitted LSB first. This can also be represented as 16'hE73C when transmitted LSB first. The complete switch sequence should consist of the following transactions on the TCK/SWCLK and TMS/SWDIO signals:

1. Send at least 50 TCK/SWCLK cycles with TMS/SWDIO set to 1. This ensures that both JTAG and SWD are in their reset/idle states.

2. Send the 16-bit SWD-to-JTAG switch sequence, 16'hE73C.

3. Send at least 5 TCK/SWCLK cycles with TMS/SWDIO set to 1. This ensures that if SWJ-DP was already in JTAG mode, before sending the switch sequence, the JTAG goes into the Test Logic Reset state.

4.4 Initialization and Configuration

After a Power-On-Reset or an external reset ($\overline{\text{RST}}$), the JTAG pins are automatically configured for JTAG communication. No user-defined initialization or configuration is needed. However, if the user application changes these pins to their GPIO function, they must be configured back to their JTAG functionality before JTAG communication can be restored. This is done by enabling the five JTAG pins (PB7 and PC[3:0]) for their alternate function using the **GPIOAFSEL** register. In addition to enabling the alternate functions, any other changes to the GPIO pad configurations on the five JTAG pins (PB7 andPC[3:0]) should be reverted to their default settings.

4.5 Register Descriptions

There are no APB-accessible registers in the JTAG TAP Controller or Shift Register chains. The registers within the JTAG controller are all accessed serially through the TAP Controller. The registers can be broken down into two main categories: Instruction Registers and Data Registers.

4.5.1 Instruction Register (IR)

The JTAG TAP Instruction Register (IR) is a four-bit serial scan chain connected between the JTAG TDI and TDO pins with a parallel load register. When the TAP Controller is placed in the correct states, bits can be shifted into the Instruction Register. Once these bits have been shifted into the chain and updated, they are interpreted as the current instruction. The decode of the Instruction Register bits is shown in Table 4-4 on page 160. A detailed explanation of each instruction, along with its associated Data Register, follows.

Table 4-4. JTAG Instruction Register Commands

IR[3:0]	Instruction	Description
0000	EXTEST	Drives the values preloaded into the Boundary Scan Chain by the SAMPLE/PRELOAD instruction onto the pads.
0001	INTEST	Drives the values preloaded into the Boundary Scan Chain by the SAMPLE/PRELOAD instruction into the controller.

Table 4-4. JTAG Instruction Register Commands *(continued)*

IR[3:0]	Instruction	Description
0010	SAMPLE / PRELOAD	Captures the current I/O values and shifts the sampled values out of the Boundary Scan Chain while new preload data is shifted in.
1000	ABORT	Shifts data into the ARM Debug Port Abort Register.
1010	DPACC	Shifts data into and out of the ARM DP Access Register.
1011	APACC	Shifts data into and out of the ARM AC Access Register.
1110	IDCODE	Loads manufacturing information defined by the *IEEE Standard 1149.1* into the IDCODE chain and shifts it out.
1111	BYPASS	Connects `TDI` to `TDO` through a single Shift Register chain.
All Others	Reserved	Defaults to the BYPASS instruction to ensure that `TDI` is always connected to `TDO`.

4.5.1.1 EXTEST Instruction

The EXTEST instruction is not associated with its own Data Register chain. The EXTEST instruction uses the data that has been preloaded into the Boundary Scan Data Register using the SAMPLE/PRELOAD instruction. When the EXTEST instruction is present in the Instruction Register, the preloaded data in the Boundary Scan Data Register associated with the outputs and output enables are used to drive the GPIO pads rather than the signals coming from the core. This allows tests to be developed that drive known values out of the controller, which can be used to verify connectivity. While the EXTEST instruction is present in the Instruction Register, the Boundary Scan Data Register can be accessed to sample and shift out the current data and load new data into the Boundary Scan Data Register.

4.5.1.2 INTEST Instruction

The INTEST instruction is not associated with its own Data Register chain. The INTEST instruction uses the data that has been preloaded into the Boundary Scan Data Register using the SAMPLE/PRELOAD instruction. When the INTEST instruction is present in the Instruction Register, the preloaded data in the Boundary Scan Data Register associated with the inputs are used to drive the signals going into the core rather than the signals coming from the GPIO pads. This allows tests to be developed that drive known values into the controller, which can be used for testing. It is important to note that although the $\overline{\text{RST}}$ input pin is on the Boundary Scan Data Register chain, it is only observable. While the INTEXT instruction is present in the Instruction Register, the Boundary Scan Data Register can be accessed to sample and shift out the current data and load new data into the Boundary Scan Data Register.

4.5.1.3 SAMPLE/PRELOAD Instruction

The SAMPLE/PRELOAD instruction connects the Boundary Scan Data Register chain between `TDI` and `TDO`. This instruction samples the current state of the pad pins for observation and preloads new test data. Each GPIO pad has an associated input, output, and output enable signal. When the TAP controller enters the Capture DR state during this instruction, the input, output, and output-enable signals to each of the GPIO pads are captured. These samples are serially shifted out of `TDO` while the TAP controller is in the Shift DR state and can be used for observation or comparison in various tests.

While these samples of the inputs, outputs, and output enables are being shifted out of the Boundary Scan Data Register, new data is being shifted into the Boundary Scan Data Register from `TDI`. Once the new data has been shifted into the Boundary Scan Data Register, the data is saved in the parallel load registers when the TAP controller enters the Update DR state. This update of the parallel load register preloads data into the Boundary Scan Data Register that is associated with

each input, output, and output enable. This preloaded data can be used with the EXTEST and INTEST instructions to drive data into or out of the controller. Please see “Boundary Scan Data Register” on page 163 for more information.

4.5.1.4 ABORT Instruction

The ABORT instruction connects the associated ABORT Data Register chain between `TDI` and `TDO`. This instruction provides read and write access to the ABORT Register of the ARM Debug Access Port (DAP). Shifting the proper data into this Data Register clears various error bits or initiates a DAP abort of a previous request. Please see the “ABORT Data Register” on page 164 for more information.

4.5.1.5 DPACC Instruction

The DPACC instruction connects the associated DPACC Data Register chain between `TDI` and `TDO`. This instruction provides read and write access to the DPACC Register of the ARM Debug Access Port (DAP). Shifting the proper data into this register and reading the data output from this register allows read and write access to the ARM debug and status registers. Please see “DPACC Data Register” on page 164 for more information.

4.5.1.6 APACC Instruction

The APACC instruction connects the associated APACC Data Register chain between `TDI` and `TDO`. This instruction provides read and write access to the APACC Register of the ARM Debug Access Port (DAP). Shifting the proper data into this register and reading the data output from this register allows read and write access to internal components and buses through the Debug Port. Please see “APACC Data Register” on page 164 for more information.

4.5.1.7 IDCODE Instruction

The IDCODE instruction connects the associated IDCODE Data Register chain between `TDI` and `TDO`. This instruction provides information on the manufacturer, part number, and version of the ARM core. This information can be used by testing equipment and debuggers to automatically configure their input and output data streams. IDCODE is the default instruction that is loaded into the JTAG Instruction Register when a Power-On-Reset (POR) is asserted, $\overline{\text{TRST}}$ is asserted, or the Test-Logic-Reset state is entered. Please see “IDCODE Data Register” on page 163 for more information.

4.5.1.8 BYPASS Instruction

The BYPASS instruction connects the associated BYPASS Data Register chain between `TDI` and `TDO`. This instruction is used to create a minimum length serial path between the `TDI` and `TDO` ports. The BYPASS Data Register is a single-bit shift register. This instruction improves test efficiency by allowing components that are not needed for a specific test to be bypassed in the JTAG scan chain by loading them with the BYPASS instruction. Please see “BYPASS Data Register” on page 163 for more information.

4.5.2 Data Registers

The JTAG module contains six Data Registers. These include: IDCODE, BYPASS, Boundary Scan, APACC, DPACC, and ABORT serial Data Register chains. Each of these Data Registers is discussed in the following sections.

4.5.2.1 IDCODE Data Register

The format for the 32-bit IDCODE Data Register defined by the *IEEE Standard 1149.1* is shown in Figure 4-3 on page 163. The standard requires that every JTAG-compliant device implement either the IDCODE instruction or the BYPASS instruction as the default instruction. The LSB of the IDCODE Data Register is defined to be a 1 to distinguish it from the BYPASS instruction, which has an LSB of 0. This allows auto configuration test tools to determine which instruction is the default instruction.

The major uses of the JTAG port are for manufacturer testing of component assembly, and program development and debug. To facilitate the use of auto-configuration debug tools, the IDCODE instruction outputs a value of 0x3BA0.0477. This allows the debuggers to automatically configure themselves to work correctly with the Cortex-M3 during debug.

Figure 4-3. IDCODE Register Format

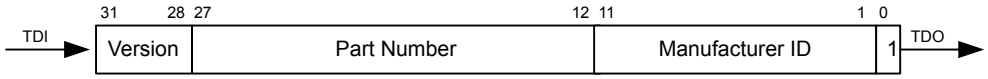

4.5.2.2 BYPASS Data Register

The format for the 1-bit BYPASS Data Register defined by the *IEEE Standard 1149.1* is shown in Figure 4-4 on page 163. The standard requires that every JTAG-compliant device implement either the BYPASS instruction or the IDCODE instruction as the default instruction. The LSB of the BYPASS Data Register is defined to be a 0 to distinguish it from the IDCODE instruction, which has an LSB of 1. This allows auto configuration test tools to determine which instruction is the default instruction.

Figure 4-4. BYPASS Register Format

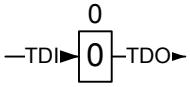

4.5.2.3 Boundary Scan Data Register

The format of the Boundary Scan Data Register is shown in Figure 4-5 on page 164. Each GPIO pin, starting with a GPIO pin next to the JTAG port pins, is included in the Boundary Scan Data Register. Each GPIO pin has three associated digital signals that are included in the chain. These signals are input, output, and output enable, and are arranged in that order as can be seen in the figure.

When the Boundary Scan Data Register is accessed with the SAMPLE/PRELOAD instruction, the input, output, and output enable from each digital pad are sampled and then shifted out of the chain to be verified. The sampling of these values occurs on the rising edge of TCK in the Capture DR state of the TAP controller. While the sampled data is being shifted out of the Boundary Scan chain in the Shift DR state of the TAP controller, new data can be preloaded into the chain for use with the EXTEST and INTEST instructions. These instructions either force data out of the controller, with the EXTEST instruction, or into the controller, with the INTEST instruction.

Figure 4-5. Boundary Scan Register Format

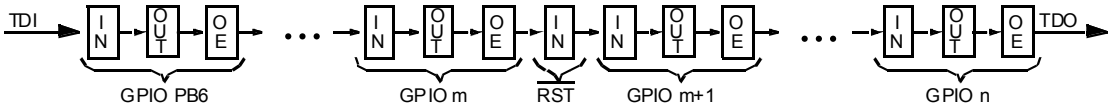

4.5.2.4 APACC Data Register

The format for the 35-bit APACC Data Register defined by ARM is described in the *ARM® Debug Interface V5 Architecture Specification*.

4.5.2.5 DPACC Data Register

The format for the 35-bit DPACC Data Register defined by ARM is described in the *ARM® Debug Interface V5 Architecture Specification*.

4.5.2.6 ABORT Data Register

The format for the 35-bit ABORT Data Register defined by ARM is described in the *ARM® Debug Interface V5 Architecture Specification*.

5 System Control

System control determines the overall operation of the device. It provides information about the device, controls the clocking to the core and individual peripherals, and handles reset detection and reporting.

5.1 Signal Description

Table 5-1 on page 165 and Table 5-2 on page 165 list the external signals of the System Control module and describe the function of each. The NMI signal is the alternate function for and functions as a GPIO after reset. under commit protection and require a special process to be configured as any alternate function or to subsequently return to the GPIO function, see “Commit Control” on page 288. The column in the table below titled "Pin Assignment" lists the GPIO pin placement for the NMI signal. The AFSEL bit in the **GPIO Alternate Function Select (GPIOAFSEL)** register (page 301) should be set to choose the NMI function. For more information on configuring GPIOs, see “General-Purpose Input/Outputs (GPIOs)” on page 278. The remaining signals (with the word "fixed" in the Pin Assignment column) have a fixed pin assignment and function.

Table 5-1. System Control & Clocks Signals (100LQFP)

Pin Name	Pin Number	Pin Type	Buffer Type[a]	Description
CMOD0	65	I	TTL	CPU Mode bit 0. Input must be set to logic 0 (grounded); other encodings reserved.
CMOD1	76	I	TTL	CPU Mode bit 1. Input must be set to logic 0 (grounded); other encodings reserved.
OSC0	48	I	Analog	Main oscillator crystal input or an external clock reference input.
OSC1	49	O	Analog	Main oscillator crystal output. Leave unconnected when using a single-ended clock source.
$\overline{\text{RST}}$	64	I	TTL	System reset input.

a. The TTL designation indicates the pin has TTL-compatible voltage levels.

Table 5-2. System Control & Clocks Signals (108BGA)

Pin Name	Pin Number	Pin Type	Buffer Type[a]	Description
CMOD0	E11	I	TTL	CPU Mode bit 0. Input must be set to logic 0 (grounded); other encodings reserved.
CMOD1	B10	I	TTL	CPU Mode bit 1. Input must be set to logic 0 (grounded); other encodings reserved.
OSC0	L11	I	Analog	Main oscillator crystal input or an external clock reference input.
OSC1	M11	O	Analog	Main oscillator crystal output. Leave unconnected when using a single-ended clock source.
$\overline{\text{RST}}$	H11	I	TTL	System reset input.

a. The TTL designation indicates the pin has TTL-compatible voltage levels.

5.2 Functional Description

The System Control module provides the following capabilities:

- Device identification (see “Device Identification” on page 166)

- Local control, such as reset (see “Reset Control” on page 166), power (see “Power Control” on page 170) and clock control (see “Clock Control” on page 171)
- System control (Run, Sleep, and Deep-Sleep modes); see “System Control” on page 176

5.2.1 Device Identification

Several read-only registers provide software with information on the microcontroller, such as version, part number, SRAM size, flash size, and other features. See the **DID0**, **DID1**, and **DC0**-**DC4** registers.

5.2.2 Reset Control

This section discusses aspects of hardware functions during reset as well as system software requirements following the reset sequence.

5.2.2.1 CMOD0 and CMOD1 Test-Mode Control Pins

Two pins, `CMOD0` and `CMOD1`, are defined for internal use for testing the microcontroller during manufacture. They have no end-user function and should not be used. The `CMOD` pins should be connected to ground.

5.2.2.2 Reset Sources

The controller has five sources of reset:

1. External reset input pin ($\overline{\text{RST}}$) assertion; see “External $\overline{\text{RST}}$ Pin” on page 167.
2. Power-on reset (POR); see “Power-On Reset (POR)” on page 167.
3. Internal brown-out (BOR) detector; see “Brown-Out Reset (BOR)” on page 168.
4. Software-initiated reset (with the software reset registers); see “Software Reset” on page 169.
5. A watchdog timer reset condition violation; see “Watchdog Timer Reset” on page 169.

Table 5-3 provides a summary of results of the various reset operations.

Table 5-3. Reset Sources

Reset Source	Core Reset?	JTAG Reset?	On-Chip Peripherals Reset?
Power-On Reset	Yes	Yes	Yes
$\overline{\text{RST}}$	Yes	Pin Config Only	Yes
Brown-Out Reset	Yes	No	Yes
Software System Request Reset[a]	Yes	No	Yes
Software Peripheral Reset	No	No	Yes[b]
Watchdog Reset	Yes	No	Yes

a. By using the `SYSRESREQ` bit in the ARM Cortex-M3 **Application Interrupt and Reset Control (APINT)** register

b. Programmable on a module-by-module basis using the Software Reset Control Registers.

After a reset, the **Reset Cause (RESC)** register is set with the reset cause. The bits in this register are sticky and maintain their state across multiple reset sequences, except when an internal POR is the cause, and then all the other bits in the **RESC** register are cleared except for the POR indicator.

5.2.2.3 Power-On Reset (POR)

Note: The power-on reset also resets the JTAG controller. An external reset does not.

The internal Power-On Reset (POR) circuit monitors the power supply voltage (V_{DD}) and generates a reset signal to all of the internal logic including JTAG when the power supply ramp reaches a threshold value (V_{TH}). The microcontroller must be operating within the specified operating parameters when the on-chip power-on reset pulse is complete. The 3.3-V power supply to the microcontroller must reach 3.0 V within 10 msec of V_{DD} crossing 2.0 V to guarantee proper operation. For applications that require the use of an external reset signal to hold the microcontroller in reset longer than the internal POR, the $\overline{RST}$ input may be used as discussed in "External $\overline{RST}$ Pin" on page 167.

The Power-On Reset sequence is as follows:

1. The microcontroller waits for internal POR to go inactive.
2. The internal reset is released and the core loads from memory the initial stack pointer, the initial program counter, and the first instruction designated by the program counter, and then begins execution.

The internal POR is only active on the initial power-up of the microcontroller. The Power-On Reset timing is shown in Figure 19-6 on page 601.

5.2.2.4 External $\overline{RST}$ Pin

Note: It is recommended that the trace for the $\overline{RST}$ signal must be kept as short as possible. Be sure to place any components connected to the $\overline{RST}$ signal as close to the microcontroller as possible.

If the application only uses the internal POR circuit, the $\overline{RST}$ input must be connected to the power supply (V_{DD}) through an optional pull-up resistor (0 to 100K Ω) as shown in Figure 5-1 on page 167.

Figure 5-1. Basic $\overline{RST}$ Configuration

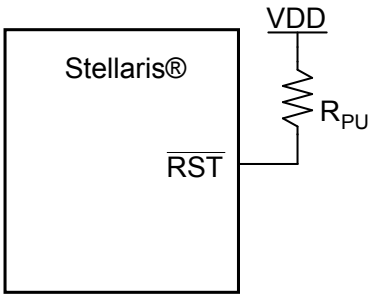

R_{PU} = 0 to 100 kΩ

The external reset pin ($\overline{RST}$) resets the microcontroller including the core and all the on-chip peripherals except the JTAG TAP controller (see "JTAG Interface" on page 152). The external reset sequence is as follows:

1. The external reset pin ($\overline{RST}$) is asserted for the duration specified by T_{MIN} and then de-asserted (see "Reset" on page 600).
2. The internal reset is released and the core loads from memory the initial stack pointer, the initial program counter, and the first instruction designated by the program counter, and then begins execution.

To improve noise immunity and/or to delay reset at power up, the $\overline{RST}$ input may be connected to an RC network as shown in Figure 5-2 on page 168.

Figure 5-2. External Circuitry to Extend Power-On Reset

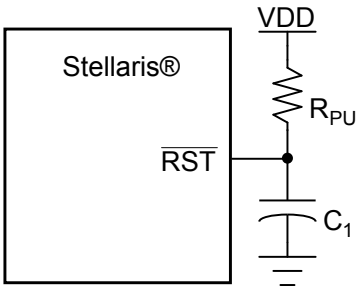

R_{PU} = 1 kΩ to 100 kΩ

C_1 = 1 nF to 10 µF

If the application requires the use of an external reset switch, Figure 5-3 on page 168 shows the proper circuitry to use.

Figure 5-3. Reset Circuit Controlled by Switch

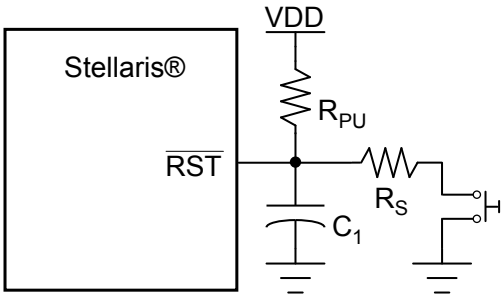

Typical R_{PU} = 10 kΩ

Typical R_S = 470 Ω

C_1 = 10 nF

The R_{PU} and C_1 components define the power-on delay.

The external reset timing is shown in Figure 19-5 on page 601.

5.2.2.5 Brown-Out Reset (BOR)

A drop in the input voltage resulting in the assertion of the internal brown-out detector can be used to reset the controller. This is initially disabled and may be enabled by software.

The system provides a brown-out detection circuit that triggers if the power supply (V_{DD}) drops below a brown-out threshold voltage (V_{BTH}). If a brown-out condition is detected, the system may generate a controller interrupt or a system reset.

Brown-out resets are controlled with the **Power-On and Brown-Out Reset Control (PBORCTL)** register. The `BORIOR` bit in the **PBORCTL** register must be set for a brown-out condition to trigger a reset.

The brown-out reset is equivalent to an assertion of the external $\overline{RST}$ input and the reset is held active until the proper V_{DD} level is restored. The **RESC** register can be examined in the reset interrupt handler to determine if a Brown-Out condition was the cause of the reset, thus allowing software to determine what actions are required to recover.

The internal Brown-Out Reset timing is shown in Figure 19-7 on page 601.

5.2.2.6 Software Reset

Software can reset a specific peripheral or generate a reset to the entire system .

Peripherals can be individually reset by software via three registers that control reset signals to each peripheral (see the **SRCRn** registers). If the bit position corresponding to a peripheral is set and subsequently cleared, the peripheral is reset. The encoding of the reset registers is consistent with the encoding of the clock gating control for peripherals and on-chip functions (see “System Control” on page 176). Note that all reset signals for all clocks of the specified unit are asserted as a result of a software-initiated reset.

The entire system can be reset by software by setting the SYSRESETREQ bit in the Cortex-M3 Application Interrupt and Reset Control register resets the entire system including the core. The software-initiated system reset sequence is as follows:

1. A software system reset is initiated by writing the SYSRESETREQ bit in the ARM Cortex-M3 Application Interrupt and Reset Control register.
2. An internal reset is asserted.
3. The internal reset is deasserted and the controller loads from memory the initial stack pointer, the initial program counter, and the first instruction designated by the program counter, and then begins execution.

The software-initiated system reset timing is shown in Figure 19-8 on page 602.

5.2.2.7 Watchdog Timer Reset

The watchdog timer module's function is to prevent system hangs. The watchdog timer can be configured to generate an interrupt to the controller on its first time-out, and to generate a reset signal on its second time-out.

After the first time-out event, the 32-bit counter is reloaded with the value of the **Watchdog Timer Load (WDTLOAD)** register, and the timer resumes counting down from that value. If the timer counts down to its zero state again before the first time-out interrupt is cleared, and the reset signal has been enabled, the watchdog timer asserts its reset signal to the system. The watchdog timer reset sequence is as follows:

1. The watchdog timer times out for the second time without being serviced.
2. An internal reset is asserted.
3. The internal reset is released and the controller loads from memory the initial stack pointer, the initial program counter, the first instruction designated by the program counter, and begins execution.

The watchdog reset timing is shown in Figure 19-9 on page 602.

5.2.3 Power Control

The Stellaris® microcontroller provides an integrated LDO regulator that is used to provide power to the majority of the controller's internal logic. For power reduction, the LDO regulator provides software a mechanism to adjust the regulated value, in small increments (VSTEP), over the range of 2.25 V to 2.75 V (inclusive)—or 2.5 V ± 10%. The adjustment is made by changing the value of the VADJ field in the **LDO Power Control (LDOPCTL)** register.

Figure 5-4 on page 170 shows the power architecture.

Note: On the printed circuit board, use the LDO output as the source of VDD25 input. Do not use an external regulator to supply the voltage to VDD25. In addition, the LDO requires decoupling capacitors. See “On-Chip Low Drop-Out (LDO) Regulator Characteristics” on page 595.

VDDA must be supplied with 3.3 V, or the microcontroller does not function properly. VDDA is the supply for all of the analog circuitry on the device, including the LDO and the clock circuitry.

Figure 5-4. Power Architecture

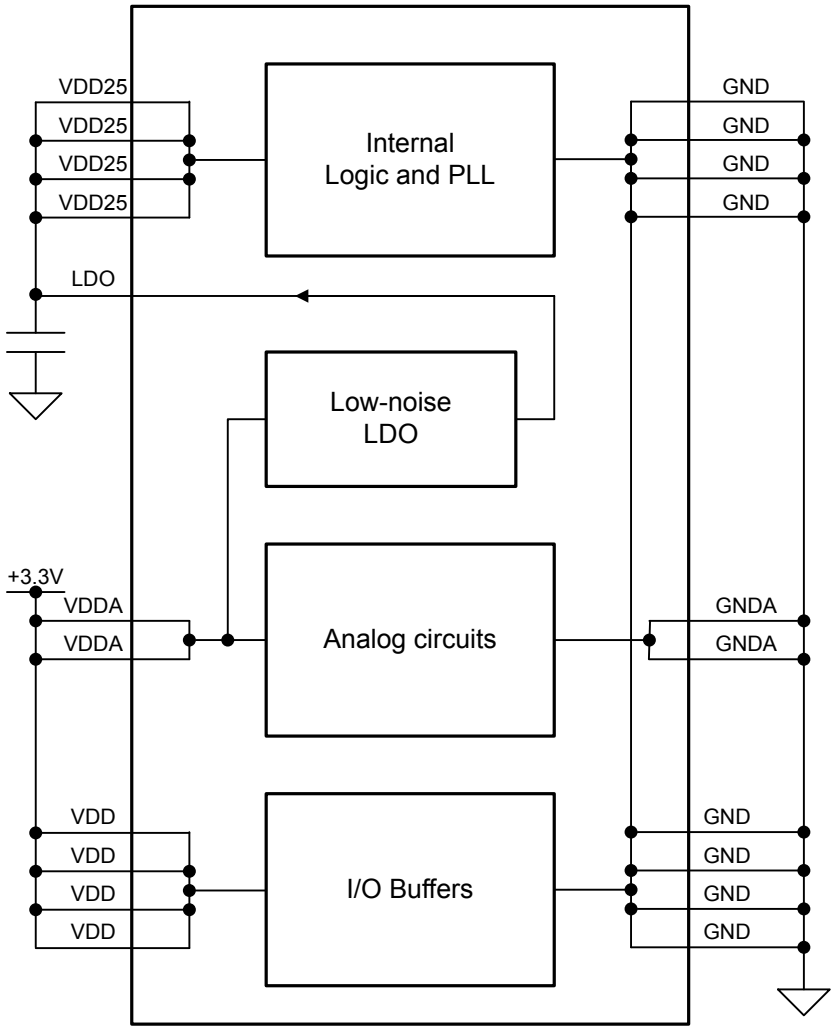

5.2.4 Clock Control

System control determines the control of clocks in this part.

5.2.4.1 Fundamental Clock Sources

There are multiple clock sources for use in the device:

- **Internal Oscillator (IOSC).** The internal oscillator is an on-chip clock source. It does not require the use of any external components. The frequency of the internal oscillator is 12 MHz ± 30%. Applications that do not depend on accurate clock sources may use this clock source to reduce system cost. The internal oscillator is the clock source the device uses during and following POR. If the main oscillator is required, software must enable the main oscillator following reset and allow the main oscillator to stabilize before changing the clock reference.

- **Main Oscillator (MOSC).** The main oscillator provides a frequency-accurate clock source by one of two means: an external single-ended clock source is connected to the `OSC0` input pin, or an external crystal is connected across the `OSC0` input and `OSC1` output pins. If the PLL is being used, the crystal value must be one of the supported frequencies between 3.579545 MHz through 8.192 MHz (inclusive). If the PLL is not being used, the crystal may be any one of the supported frequencies between 1 MHz and 8.192 MHz. The single-ended clock source range is from DC through the specified speed of the device. The supported crystals are listed in the `XTAL` bit field in the **RCC** register (see page 188).

- **Internal 30-kHz Oscillator.** The internal 30-kHz oscillator is similar to the internal oscillator, except that it provides an operational frequency of 30 kHz ± 50%. It is intended for use during Deep-Sleep power-saving modes. This power-savings mode benefits from reduced internal switching and also allows the main oscillator to be powered down.

- **External Real-Time Oscillator.** The external real-time oscillator provides a low-frequency, accurate clock reference. It is intended to provide the system with a real-time clock source. The real-time oscillator is part of the Hibernation Module (see “Hibernation Module” on page 231) and may also provide an accurate source of Deep-Sleep or Hibernate mode power savings.

The internal system clock (SysClk), is derived from any of the above sources plus two others: the output of the main internal PLL, and the internal oscillator divided by four (3 MHz ± 30%). The frequency of the PLL clock reference must be in the range of 3.579545 MHz to 8.192 MHz (inclusive). Table 5-4 on page 171 shows how the various clock sources can be used in a system.

Table 5-4. Clock Source Options

Clock Source	Drive PLL?		Used as SysClk?	
Internal Oscillator (12 MHz)	No	`BYPASS = 1`	Yes	`BYPASS = 1, OSCSRC = 0x1`
Internal Oscillator divide by 4 (3 MHz)	No	`BYPASS = 1`	Yes	`BYPASS = 1, OSCSRC = 0x2`
Main Oscillator	Yes	`BYPASS = 0, OSCSRC = 0x0`	Yes	`BYPASS = 1, OSCSRC = 0x0`
Internal 30-kHz Oscillator	No	`BYPASS = 1`	Yes	`BYPASS = 1, OSCSRC = 0x3`
External Real-Time Oscillator	No	`BYPASS = 1`	Yes	`BYPASS = 1, OSCSRC2 = 0x7`

5.2.4.2 Clock Configuration

The **Run-Mode Clock Configuration (RCC)** and **Run-Mode Clock Configuration 2 (RCC2)** registers provide control for the system clock. The **RCC2** register is provided to extend fields that

offer additional encodings over the **RCC** register. When used, the **RCC2** register field values are used by the logic over the corresponding field in the **RCC** register. In particular, **RCC2** provides for a larger assortment of clock configuration options. These registers control the following clock functionality:

- Source of clocks in sleep and deep-sleep modes
- System clock derived from PLL or other clock source
- Enabling/disabling of oscillators and PLL
- Clock divisors
- Crystal input selection

Figure 5-5 on page 173 shows the logic for the main clock tree. The peripheral blocks are driven by the system clock signal and can be individually enabled/disabled.

Figure 5-5. Main Clock Tree

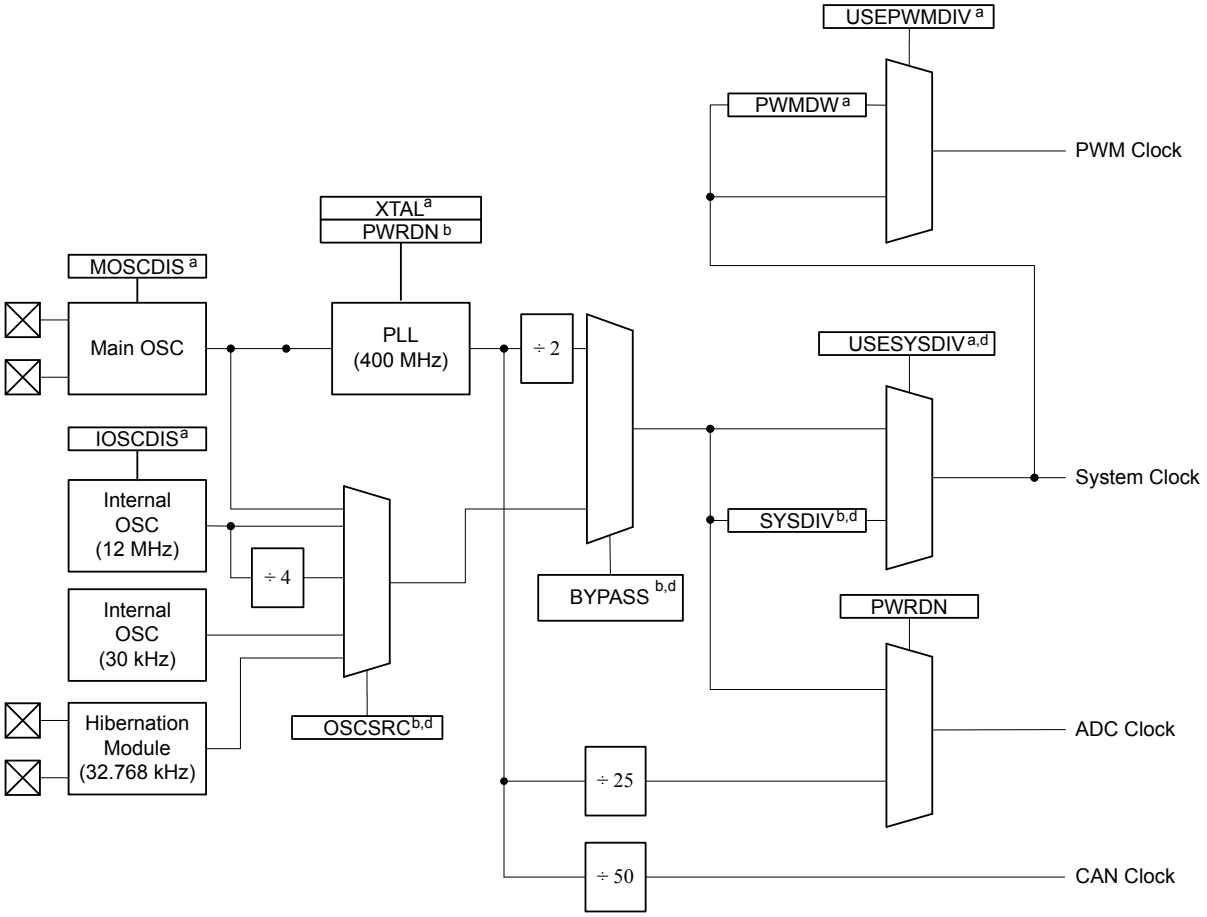

a. Control provided by RCC register bit/field.
b. Control provided by RCC register bit/field or RCC2 register bit/field, if overridden with RCC2 register bit USERCC2.
c. Control provided by RCC2 register bit/field.
d. Also may be controlled by DSLPCLKCFG when in deep sleep mode.

Note: The figure above shows all features available on all Stellaris® Fury-class devices. Not all peripherals may be available on this device.

In the **RCC** register, the `SYSDIV` field specifies which divisor is used to generate the system clock from either the PLL output or the oscillator source (depending on how the `BYPASS` bit in this register is configured). When using the PLL, the VCO frequency of 400 MHz is predivided by 2 before the divisor is applied. Table 5-5 shows how the `SYSDIV` encoding affects the system clock frequency, depending on whether the PLL is used (`BYPASS`=0) or another clock source is used (`BYPASS`=1). The divisor is equivalent to the `SYSDIV` encoding plus 1. For a list of possible clock sources, see Table 5-4 on page 171.

Table 5-5. Possible System Clock Frequencies Using the SYSDIV Field

SYSDIV	Divisor	Frequency (BYPASS=0)	Frequency (BYPASS=1)	StellarisWare Parameter[a]
0x0	/1	reserved	Clock source frequency/2	SYSCTL_SYSDIV_1[b]
0x1	/2	reserved	Clock source frequency/2	SYSCTL_SYSDIV_2
0x2	/3	reserved	Clock source frequency/3	SYSCTL_SYSDIV_3
0x3	/4	50 MHz	Clock source frequency/4	SYSCTL_SYSDIV_4
0x4	/5	40 MHz	Clock source frequency/5	SYSCTL_SYSDIV_5
0x5	/6	33.33 MHz	Clock source frequency/6	SYSCTL_SYSDIV_6
0x6	/7	28.57 MHz	Clock source frequency/7	SYSCTL_SYSDIV_7
0x7	/8	25 MHz	Clock source frequency/8	SYSCTL_SYSDIV_8
0x8	/9	22.22 MHz	Clock source frequency/9	SYSCTL_SYSDIV_9
0x9	/10	20 MHz	Clock source frequency/10	SYSCTL_SYSDIV_10
0xA	/11	18.18 MHz	Clock source frequency/11	SYSCTL_SYSDIV_11
0xB	/12	16.67 MHz	Clock source frequency/12	SYSCTL_SYSDIV_12
0xC	/13	15.38 MHz	Clock source frequency/13	SYSCTL_SYSDIV_13
0xD	/14	14.29 MHz	Clock source frequency/14	SYSCTL_SYSDIV_14
0xE	/15	13.33 MHz	Clock source frequency/15	SYSCTL_SYSDIV_15
0xF	/16	12.5 MHz (default)	Clock source frequency/16	SYSCTL_SYSDIV_16

a. This parameter is used in functions such as SysCtlClockSet() in the Stellaris Peripheral Driver Library.

b. SYSCTL_SYSDIV_1 does not set the USESYSDIV bit. As a result, using this parameter without enabling the PLL results in the system clock having the same frequency as the clock source.

The SYSDIV2 field in the **RCC2** register is 2 bits wider than the SYSDIV field in the **RCC** register so that additional larger divisors up to /64 are possible, allowing a lower system clock frequency for improved Deep Sleep power consumption. When using the PLL, the VCO frequency of 400 MHz is predivided by 2 before the divisor is applied. The divisor is equivalent to the SYSDIV2 encoding plus 1. Table 5-6 shows how the SYSDIV2 encoding affects the system clock frequency, depending on whether the PLL is used (BYPASS2=0) or another clock source is used (BYPASS2=1). For a list of possible clock sources, see Table 5-4 on page 171.

Table 5-6. Examples of Possible System Clock Frequencies Using the SYSDIV2 Field

SYSDIV2	Divisor	Frequency (BYPASS2=0)	Frequency (BYPASS2=1)	StellarisWare Parameter[a]
0x00	/1	reserved	Clock source frequency/2	SYSCTL_SYSDIV_1[b]
0x01	/2	reserved	Clock source frequency/2	SYSCTL_SYSDIV_2
0x02	/3	reserved	Clock source frequency/3	SYSCTL_SYSDIV_3
0x03	/4	50 MHz	Clock source frequency/4	SYSCTL_SYSDIV_4
0x04	/5	40 MHz	Clock source frequency/5	SYSCTL_SYSDIV_5
0x05	/6	33.33 MHz	Clock source frequency/6	SYSCTL_SYSDIV_6
0x06	/7	28.57 MHz	Clock source frequency/7	SYSCTL_SYSDIV_7
0x07	/8	25 MHz	Clock source frequency/8	SYSCTL_SYSDIV_8
0x08	/9	22.22 MHz	Clock source frequency/9	SYSCTL_SYSDIV_9
0x09	/10	20 MHz	Clock source frequency/10	SYSCTL_SYSDIV_10
...	...	...	...	...

Table 5-6. Examples of Possible System Clock Frequencies Using the SYSDIV2 Field *(continued)*

SYSDIV2	Divisor	Frequency (BYPASS2=0)	Frequency (BYPASS2=1)	StellarisWare Parameter[a]
0x3F	/64	3.125 MHz	Clock source frequency/64	SYSCTL_SYSDIV_64

a. This parameter is used in functions such as SysCtlClockSet() in the Stellaris Peripheral Driver Library.

b. SYSCTL_SYSDIV_1 does not set the USESYSDIV bit. As a result, using this parameter without enabling the PLL results in the system clock having the same frequency as the clock source.

5.2.4.3 Crystal Configuration for the Main Oscillator (MOSC)

The main oscillator supports the use of a select number of crystals. If the main oscillator is used by the PLL as a reference clock, the supported range of crystals is 3.579545 to 8.192 MHz, otherwise, the range of supported crystals is 1 to 8.192 MHz.

The XTAL bit in the **RCC** register (see page 188) describes the available crystal choices and default programming values.

Software configures the **RCC** register XTAL field with the crystal number. If the PLL is used in the design, the XTAL field value is internally translated to the PLL settings.

5.2.4.4 Main PLL Frequency Configuration

The main PLL is disabled by default during power-on reset and is enabled later by software if required. Software specifies the output divisor to set the system clock frequency, and enables the main PLL to drive the output. The PLL operates at 400 MHz, but is divided by two prior to the application of the output divisor.

If the main oscillator provides the clock reference to the main PLL, the translation provided by hardware and used to program the PLL is available for software in the **XTAL to PLL Translation (PLLCFG)** register (see page 191). The internal translation provides a translation within ± 1% of the targeted PLL VCO frequency. Table 19-9 on page 598 shows the actual PLL frequency and error for a given crystal choice.

The Crystal Value field (XTAL) in the **Run-Mode Clock Configuration (RCC)** register (see page 188) describes the available crystal choices and default programming of the **PLLCFG** register. Any time the XTAL field changes, the new settings are translated and the internal PLL settings are updated.

To configure the external 32-kHz real-time oscillator as the PLL input reference, program the OSCRC2 field in the **Run-Mode Clock Configuration 2 (RCC2)** register to be 0x7.

5.2.4.5 PLL Modes

The PLL has two modes of operation: Normal and Power-Down

- Normal: The PLL multiplies the input clock reference and drives the output.
- Power-Down: Most of the PLL internal circuitry is disabled and the PLL does not drive the output.

The modes are programmed using the **RCC**/**RCC2** register fields (see page 188 and page 192).

5.2.4.6 PLL Operation

If a PLL configuration is changed, the PLL output frequency is unstable until it reconverges (relocks) to the new setting. The time between the configuration change and relock is T_{READY} (see Table 19-8 on page 598). During the relock time, the affected PLL is not usable as a clock reference.

PLL is changed by one of the following:

- Change to the `XTAL` value in the **RCC** register—writes of the same value do not cause a relock.
- Change in the PLL from Power-Down to Normal mode.

A counter is defined to measure the T_{READY} requirement. The counter is clocked by the main oscillator. The range of the main oscillator has been taken into account and the down counter is set to 0x1200 (that is, ~600 µs at an 8.192 MHz external oscillator clock). Hardware is provided to keep the PLL from being used as a system clock until the T_{READY} condition is met after one of the two changes above. It is the user's responsibility to have a stable clock source (like the main oscillator) before the **RCC**/**RCC2** register is switched to use the PLL.

If the main PLL is enabled and the system clock is switched to use the PLL in one step, the system control hardware continues to clock the controller from the oscillator selected by the **RCC**/**RCC2** register until the main PLL is stable (T_{READY} time met), after which it changes to the PLL. Software can use many methods to ensure that the system is clocked from the main PLL, including periodically polling the `PLLLRIS` bit in the **Raw Interrupt Status (RIS)** register, and enabling the PLL Lock interrupt.

5.2.5 System Control

For power-savings purposes, the **RCGCn** , **SCGCn** , and **DCGCn** registers control the clock gating logic for each peripheral or block in the system while the controller is in Run, Sleep, and Deep-Sleep mode, respectively.

There are four levels of operation for the device defined as:

- **Run Mode.** In Run mode, the controller actively executes code. Run mode provides normal operation of the processor and all of the peripherals that are currently enabled by the **RCGCn** registers. The system clock can be any of the available clock sources including the PLL.
- **Sleep Mode.** In Sleep mode, the clock frequency of the active peripherals is unchanged, but the processor and the memory subsystem are not clocked and therefore no longer execute code. Sleep mode is entered by the Cortex-M3 core executing a `WFI(Wait for Interrupt)` instruction. Any properly configured interrupt event in the system will bring the processor back into Run mode. See “Power Management” on page 83 for more details.

  Peripherals are clocked that are enabled in the **SCGCn** register when auto-clock gating is enabled (see the **RCC** register) or the **RCGCn** register when the auto-clock gating is disabled. The system clock has the same source and frequency as that during Run mode.
- **Deep-Sleep Mode.** In Deep-Sleep mode, the clock frequency of the active peripherals may change (depending on the Run mode clock configuration) in addition to the processor clock being stopped. An interrupt returns the device to Run mode from one of the sleep modes; the sleep modes are entered on request from the code. Deep-Sleep mode is entered by first writing the Deep Sleep Enable bit in the ARM Cortex-M3 NVIC system control register and then executing a `WFI` instruction. Any properly configured interrupt event in the system will bring the processor back into Run mode. See “Power Management” on page 83 for more details.

  The Cortex-M3 processor core and the memory subsystem are not clocked. Peripherals are clocked that are enabled in the **DCGCn** register when auto-clock gating is enabled (see the **RCC** register) or the **RCGCn** register when auto-clock gating is disabled. The system clock source is the main oscillator by default or the internal oscillator specified in the **DSLPCLKCFG** register if one is enabled. When the **DSLPCLKCFG** register is used, the internal oscillator is powered up, if necessary, and the main oscillator is powered down. If the PLL is running at the time of the

WFI instruction, hardware will power the PLL down and override the SYSDIV field of the active **RCC**/**RCC2** register, to be determined by the DSDIVORIDE setting in the **DSLPCLKCFG** register, up to /16 or /64 respectively. When the Deep-Sleep exit event occurs, hardware brings the system clock back to the source and frequency it had at the onset of Deep-Sleep mode before enabling the clocks that had been stopped during the Deep-Sleep duration.

- **Hibernate Mode.** In this mode, the power supplies are turned off to the main part of the device and only the Hibernation module's circuitry is active. An external wake event or RTC event is required to bring the device back to Run mode. The Cortex-M3 processor and peripherals outside of the Hibernation module see a normal "power on" sequence and the processor starts running code. It can determine that it has been restarted from Hibernate mode by inspecting the Hibernation module registers.

Caution – If the Cortex-M3 Debug Access Port (DAP) has been enabled, and the device wakes from a low power sleep or deep-sleep mode, the core may start executing code before all clocks to peripherals have been restored to their run mode configuration. The DAP is usually enabled by software tools accessing the JTAG or SWD interface when debugging or flash programming. If this condition occurs, a Hard Fault is triggered when software accesses a peripheral with an invalid clock.

A software delay loop can be used at the beginning of the interrupt routine that is used to wake up a system from a WFI (Wait For Interrupt) instruction. This stalls the execution of any code that accesses a peripheral register that might cause a fault. This loop can be removed for production software as the DAP is most likely not enabled during normal execution.

Because the DAP is disabled by default (power on reset), the user can also power-cycle the device. The DAP is not enabled unless it is enabled through the JTAG or SWD interface.

5.3 Initialization and Configuration

The PLL is configured using direct register writes to the **RCC**/**RCC2** register. If the **RCC2** register is being used, the USERCC2 bit must be set and the appropriate **RCC2** bit/field is used. The steps required to successfully change the PLL-based system clock are:

1. Bypass the PLL and system clock divider by setting the BYPASS bit and clearing the USESYS bit in the **RCC** register. This configures the system to run off a “raw” clock source and allows for the new PLL configuration to be validated before switching the system clock to the PLL.
2. Select the crystal value (XTAL) and oscillator source (OSCSRC), and clear the PWRDN bit in **RCC**/**RCC2**. Setting the XTAL field automatically pulls valid PLL configuration data for the appropriate crystal, and clearing the PWRDN bit powers and enables the PLL and its output.
3. Select the desired system divider (SYSDIV) in **RCC**/**RCC2** and set the USESYS bit in **RCC**. The SYSDIV field determines the system frequency for the microcontroller.
4. Wait for the PLL to lock by polling the PLLLRIS bit in the **Raw Interrupt Status (RIS)** register.
5. Enable use of the PLL by clearing the BYPASS bit in **RCC**/**RCC2**.

5.4 Register Map

Table 5-7 on page 178 lists the System Control registers, grouped by function. The offset listed is a hexadecimal increment to the register's address, relative to the System Control base address of 0x400F.E000.

Note: Spaces in the System Control register space that are not used are reserved for future or internal use. Software should not modify any reserved memory address.

Table 5-7. System Control Register Map

Offset	Name	Type	Reset	Description	See page
0x000	DID0	RO	-	Device Identification 0	180
0x004	DID1	RO	-	Device Identification 1	195
0x008	DC0	RO	0x00FF.007F	Device Capabilities 0	197
0x010	DC1	RO	0x0100.30DF	Device Capabilities 1	198
0x014	DC2	RO	0x030F.5037	Device Capabilities 2	200
0x018	DC3	RO	0xBF00.0FC0	Device Capabilities 3	202
0x01C	DC4	RO	0x0000.C0FF	Device Capabilities 4	204
0x030	PBORCTL	R/W	0x0000.7FFD	Brown-Out Reset Control	182
0x034	LDOPCTL	R/W	0x0000.0000	LDO Power Control	183
0x040	SRCR0	R/W	0x00000000	Software Reset Control 0	227
0x044	SRCR1	R/W	0x00000000	Software Reset Control 1	228
0x048	SRCR2	R/W	0x00000000	Software Reset Control 2	230
0x050	RIS	RO	0x0000.0000	Raw Interrupt Status	184
0x054	IMC	R/W	0x0000.0000	Interrupt Mask Control	185
0x058	MISC	R/W1C	0x0000.0000	Masked Interrupt Status and Clear	186
0x05C	RESC	R/W	-	Reset Cause	187
0x060	RCC	R/W	0x0780.3AD1	Run-Mode Clock Configuration	188
0x064	PLLCFG	RO	-	XTAL to PLL Translation	191
0x070	RCC2	R/W	0x0780.2810	Run-Mode Clock Configuration 2	192
0x100	RCGC0	R/W	0x00000040	Run Mode Clock Gating Control Register 0	206
0x104	RCGC1	R/W	0x00000000	Run Mode Clock Gating Control Register 1	212
0x108	RCGC2	R/W	0x00000000	Run Mode Clock Gating Control Register 2	221
0x110	SCGC0	R/W	0x00000040	Sleep Mode Clock Gating Control Register 0	208
0x114	SCGC1	R/W	0x00000000	Sleep Mode Clock Gating Control Register 1	215
0x118	SCGC2	R/W	0x00000000	Sleep Mode Clock Gating Control Register 2	223
0x120	DCGC0	R/W	0x00000040	Deep Sleep Mode Clock Gating Control Register 0	210
0x124	DCGC1	R/W	0x00000000	Deep Sleep Mode Clock Gating Control Register 1	218
0x128	DCGC2	R/W	0x00000000	Deep Sleep Mode Clock Gating Control Register 2	225
0x144	DSLPCLKCFG	R/W	0x0780.0000	Deep Sleep Clock Configuration	194

5.5 Register Descriptions

All addresses given are relative to the System Control base address of 0x400F.E000.

Register 1: Device Identification 0 (DID0), offset 0x000

This register identifies the version of the microcontroller. Each microcontroller is uniquely identified by the combined values of the `CLASS` field in the **DID0** register and the `PARTNO` field in the **DID1** register.

Device Identification 0 (DID0)

Base 0x400F.E000
Offset 0x000
Type RO, reset -

	31	30	29	28	27	26	25	24	23	22	21	20	19	18	17	16
	reserved	VER			reserved				CLASS							
Type	RO	RO	RO	RO	RO	RO	RO	RO	RO	RO	RO	RO	RO	RO	RO	RO
Reset	0	0	0	1	0	0	0	0	0	0	0	0	0	0	0	1

	15	14	13	12	11	10	9	8	7	6	5	4	3	2	1	0
	MAJOR								MINOR							
Type	RO	RO	RO	RO	RO	RO	RO	RO	RO	RO	RO	RO	RO	RO	RO	RO
Reset	-	-	-	-	-	-	-	-	-	-	-	-	-	-	-	-

Bit/Field	Name	Type	Reset	Description
31	reserved	RO	0	Software should not rely on the value of a reserved bit. To provide compatibility with future products, the value of a reserved bit should be preserved across a read-modify-write operation.
30:28	VER	RO	0x1	DID0 Version This field defines the **DID0** register format version. The version number is numeric. The value of the `VER` field is encoded as follows: Value Description 0x1 Second version of the **DID0** register format.
27:24	reserved	RO	0x0	Software should not rely on the value of a reserved bit. To provide compatibility with future products, the value of a reserved bit should be preserved across a read-modify-write operation.
23:16	CLASS	RO	0x1	Device Class The `CLASS` field value identifies the internal design from which all mask sets are generated for all devices in a particular product line. The `CLASS` field value is changed for new product lines, for changes in fab process (for example, a remap or shrink), or any case where the `MAJOR` or `MINOR` fields require differentiation from prior devices. The value of the `CLASS` field is encoded as follows (all other encodings are reserved): Value Description 0x1 Stellaris® Fury-class devices.

Bit/Field	Name	Type	Reset	Description
15:8	MAJOR	RO	-	Major Revision This field specifies the major revision number of the device. The major revision reflects changes to base layers of the design. The major revision number is indicated in the part number as a letter (A for first revision, B for second, and so on). This field is encoded as follows: Value Description 0x0 Revision A (initial device) 0x1 Revision B (first base layer revision) 0x2 Revision C (second base layer revision) and so on.
7:0	MINOR	RO	-	Minor Revision This field specifies the minor revision number of the device. The minor revision reflects changes to the metal layers of the design. The `MINOR` field value is reset when the `MAJOR` field is changed. This field is numeric and is encoded as follows: Value Description 0x0 Initial device, or a major revision update. 0x1 First metal layer change. 0x2 Second metal layer change. and so on.

Register 2: Brown-Out Reset Control (PBORCTL), offset 0x030

This register is responsible for controlling reset conditions after initial power-on reset.

Brown-Out Reset Control (PBORCTL)

Base 0x400F.E000
Offset 0x030
Type R/W, reset 0x0000.7FFD

	31	30	29	28	27	26	25	24	23	22	21	20	19	18	17	16
	reserved															
Type	RO	RO	RO	RO	RO	RO	RO	RO	RO	RO	RO	RO	RO	RO	RO	RO
Reset	0	0	0	0	0	0	0	0	0	0	0	0	0	0	0	0

	15	14	13	12	11	10	9	8	7	6	5	4	3	2	1	0
	reserved														BORIOR	reserved
Type	RO	RO	RO	RO	RO	RO	RO	RO	RO	RO	RO	RO	RO	RO	R/W	RO
Reset	0	0	0	0	0	0	0	0	0	0	0	0	0	0	0	0

Bit/Field	Name	Type	Reset	Description
31:2	reserved	RO	0x0	Software should not rely on the value of a reserved bit. To provide compatibility with future products, the value of a reserved bit should be preserved across a read-modify-write operation.
1	BORIOR	R/W	0	BOR Interrupt or Reset This bit controls how a BOR event is signaled to the controller. If set, a reset is signaled. Otherwise, an interrupt is signaled.
0	reserved	RO	0	Software should not rely on the value of a reserved bit. To provide compatibility with future products, the value of a reserved bit should be preserved across a read-modify-write operation.

Register 3: LDO Power Control (LDOPCTL), offset 0x034

The VADJ field in this register adjusts the on-chip output voltage (V_{OUT}).

LDO Power Control (LDOPCTL)

Base 0x400F.E000
Offset 0x034
Type R/W, reset 0x0000.0000

	31	30	29	28	27	26	25	24	23	22	21	20	19	18	17	16
	reserved															
Type	RO	RO	RO	RO	RO	RO	RO	RO	RO	RO	RO	RO	RO	RO	RO	RO
Reset	0	0	0	0	0	0	0	0	0	0	0	0	0	0	0	0

	15	14	13	12	11	10	9	8	7	6	5	4	3	2	1	0
	reserved										VADJ					
Type	RO	RO	RO	RO	RO	RO	RO	RO	RO	RO	R/W	R/W	R/W	R/W	R/W	R/W
Reset	0	0	0	0	0	0	0	0	0	0	0	0	0	0	0	0

Bit/Field	Name	Type	Reset	Description
31:6	reserved	RO	0	Software should not rely on the value of a reserved bit. To provide compatibility with future products, the value of a reserved bit should be preserved across a read-modify-write operation.
5:0	VADJ	R/W	0x0	LDO Output Voltage This field sets the on-chip output voltage. The programming values for the VADJ field are provided below.

Value	V_{OUT} (V)
0x00	2.50
0x01	2.45
0x02	2.40
0x03	2.35
0x04	2.30
0x05	2.25
0x06-0x3F	Reserved
0x1B	2.75
0x1C	2.70
0x1D	2.65
0x1E	2.60
0x1F	2.55

Register 4: Raw Interrupt Status (RIS), offset 0x050

Central location for system control raw interrupts. These are set and cleared by hardware.

Raw Interrupt Status (RIS)

Base 0x400F.E000
Offset 0x050
Type RO, reset 0x0000.0000

	31	30	29	28	27	26	25	24	23	22	21	20	19	18	17	16
	reserved															
Type	RO	RO	RO	RO	RO	RO	RO	RO	RO	RO	RO	RO	RO	RO	RO	RO
Reset	0	0	0	0	0	0	0	0	0	0	0	0	0	0	0	0

	15	14	13	12	11	10	9	8	7	6	5	4	3	2	1	0
	reserved									PLLLRIS	reserved				BORRIS	reserved
Type	RO	RO	RO	RO	RO	RO	RO	RO	RO	RO	RO	RO	RO	RO	RO	RO
Reset	0	0	0	0	0	0	0	0	0	0	0	0	0	0	0	0

Bit/Field	Name	Type	Reset	Description
31:7	reserved	RO	0	Software should not rely on the value of a reserved bit. To provide compatibility with future products, the value of a reserved bit should be preserved across a read-modify-write operation.
6	PLLLRIS	RO	0	PLL Lock Raw Interrupt Status This bit is set when the PLL T_{READY} Timer asserts.
5:2	reserved	RO	0	Software should not rely on the value of a reserved bit. To provide compatibility with future products, the value of a reserved bit should be preserved across a read-modify-write operation.
1	BORRIS	RO	0	Brown-Out Reset Raw Interrupt Status This bit is the raw interrupt status for any brown-out conditions. If set, a brown-out condition is currently active. This is an unregistered signal from the brown-out detection circuit. An interrupt is reported if the `BORIM` bit in the **IMC** register is set and the `BORIOR` bit in the **PBORCTL** register is cleared.
0	reserved	RO	0	Software should not rely on the value of a reserved bit. To provide compatibility with future products, the value of a reserved bit should be preserved across a read-modify-write operation.

Register 5: Interrupt Mask Control (IMC), offset 0x054

Central location for system control interrupt masks.

Interrupt Mask Control (IMC)

Base 0x400F.E000
Offset 0x054
Type R/W, reset 0x0000.0000

	31	30	29	28	27	26	25	24	23	22	21	20	19	18	17	16
	reserved															
Type	RO	RO	RO	RO	RO	RO	RO	RO	RO	RO	RO	RO	RO	RO	RO	RO
Reset	0	0	0	0	0	0	0	0	0	0	0	0	0	0	0	0

	15	14	13	12	11	10	9	8	7	6	5	4	3	2	1	0
	reserved									PLLLIM	reserved				BORIM	reserved
Type	RO	RO	RO	RO	RO	RO	RO	RO	RO	R/W	RO	RO	RO	RO	R/W	RO
Reset	0	0	0	0	0	0	0	0	0	0	0	0	0	0	0	0

Bit/Field	Name	Type	Reset	Description
31:7	reserved	RO	0	Software should not rely on the value of a reserved bit. To provide compatibility with future products, the value of a reserved bit should be preserved across a read-modify-write operation.
6	PLLLIM	R/W	0	PLL Lock Interrupt Mask This bit specifies whether a PLL Lock interrupt is promoted to a controller interrupt. If set, an interrupt is generated if `PLLLRIS` in **RIS** is set; otherwise, an interrupt is not generated.
5:2	reserved	RO	0	Software should not rely on the value of a reserved bit. To provide compatibility with future products, the value of a reserved bit should be preserved across a read-modify-write operation.
1	BORIM	R/W	0	Brown-Out Reset Interrupt Mask This bit specifies whether a brown-out condition is promoted to a controller interrupt. If set, an interrupt is generated if `BORRIS` is set; otherwise, an interrupt is not generated.
0	reserved	RO	0	Software should not rely on the value of a reserved bit. To provide compatibility with future products, the value of a reserved bit should be preserved across a read-modify-write operation.

Register 6: Masked Interrupt Status and Clear (MISC), offset 0x058

On a read, this register gives the current masked status value of the corresponding interrupt. All of the bits are R/W1C and this action also clears the corresponding raw interrupt bit in the **RIS** register (see page 184).

Masked Interrupt Status and Clear (MISC)

Base 0x400F.E000
Offset 0x058
Type R/W1C, reset 0x0000.0000

	31	30	29	28	27	26	25	24	23	22	21	20	19	18	17	16
	reserved															
Type	RO	RO	RO	RO	RO	RO	RO	RO	RO	RO	RO	RO	RO	RO	RO	RO
Reset	0	0	0	0	0	0	0	0	0	0	0	0	0	0	0	0

	15	14	13	12	11	10	9	8	7	6	5	4	3	2	1	0
	reserved									PLLLMIS	reserved				BORMIS	reserved
Type	RO	RO	RO	RO	RO	RO	RO	RO	RO	R/W1C	RO	RO	RO	RO	R/W1C	RO
Reset	0	0	0	0	0	0	0	0	0	0	0	0	0	0	0	0

Bit/Field	Name	Type	Reset	Description
31:7	reserved	RO	0	Software should not rely on the value of a reserved bit. To provide compatibility with future products, the value of a reserved bit should be preserved across a read-modify-write operation.
6	PLLLMIS	R/W1C	0	PLL Lock Masked Interrupt Status This bit is set when the PLL T_{READY} timer asserts. The interrupt is cleared by writing a 1 to this bit.
5:2	reserved	RO	0	Software should not rely on the value of a reserved bit. To provide compatibility with future products, the value of a reserved bit should be preserved across a read-modify-write operation.
1	BORMIS	R/W1C	0	BOR Masked Interrupt Status The `BORMIS` is simply the `BORRIS` ANDed with the mask value, `BORIM`.
0	reserved	RO	0	Software should not rely on the value of a reserved bit. To provide compatibility with future products, the value of a reserved bit should be preserved across a read-modify-write operation.

Register 7: Reset Cause (RESC), offset 0x05C

This register is set with the reset cause after reset. The bits in this register are sticky and maintain their state across multiple reset sequences, except when an power-on reset is the cause, in which case, all bits other than POR in the **RESC** register are cleared.

Reset Cause (RESC)

Base 0x400F.E000
Offset 0x05C
Type R/W, reset -

	31	30	29	28	27	26	25	24	23	22	21	20	19	18	17	16
	reserved															
Type	RO	RO	RO	RO	RO	RO	RO	RO	RO	RO	RO	RO	RO	RO	RO	RO
Reset	0	0	0	0	0	0	0	0	0	0	0	0	0	0	0	0

	15	14	13	12	11	10	9	8	7	6	5	4	3	2	1	0
	reserved											SW	WDT	BOR	POR	EXT
Type	RO	RO	RO	RO	RO	RO	RO	RO	RO	RO	RO	R/W	R/W	R/W	R/W	R/W
Reset	0	0	0	0	0	0	0	0	0	0	0	-	-	-	-	-

Bit/Field	Name	Type	Reset	Description
31:5	reserved	RO	0	Software should not rely on the value of a reserved bit. To provide compatibility with future products, the value of a reserved bit should be preserved across a read-modify-write operation.
4	SW	R/W	-	Software Reset When set, indicates a software reset is the cause of the reset event.
3	WDT	R/W	-	Watchdog Timer Reset When set, indicates a watchdog reset is the cause of the reset event.
2	BOR	R/W	-	Brown-Out Reset When set, indicates a brown-out reset is the cause of the reset event.
1	POR	R/W	-	Power-On Reset When set, indicates a power-on reset is the cause of the reset event.
0	EXT	R/W	-	External Reset When set, indicates an external reset ($\overline{RST}$ assertion) is the cause of the reset event.

Register 8: Run-Mode Clock Configuration (RCC), offset 0x060

This register is defined to provide source control and frequency speed.

Run-Mode Clock Configuration (RCC)

Base 0x400F.E000
Offset 0x060
Type R/W, reset 0x0780.3AD1

	31	30	29	28	27	26	25	24	23	22	21	20	19	18	17	16
	reserved				ACG	SYSDIV				USESYSDIV	reserved					
Type	RO	RO	RO	RO	R/W	R/W	R/W	R/W	R/W	R/W	RO	RO	RO	RO	RO	RO
Reset	0	0	0	0	0	1	1	1	1	0	0	0	0	0	0	0

	15	14	13	12	11	10	9	8	7	6	5	4	3	2	1	0
	reserved		PWRDN	reserved	BYPASS	reserved	XTAL				OSCSRC		reserved		IOSCDIS	MOSCDIS
Type	RO	RO	R/W	RO	R/W	RO	R/W	R/W	R/W	R/W	R/W	R/W	RO	RO	R/W	R/W
Reset	0	0	1	1	1	0	1	0	1	1	0	1	0	0	0	1

Bit/Field	Name	Type	Reset	Description
31:28	reserved	RO	0x0	Software should not rely on the value of a reserved bit. To provide compatibility with future products, the value of a reserved bit should be preserved across a read-modify-write operation.
27	ACG	R/W	0	Auto Clock Gating This bit specifies whether the system uses the **Sleep-Mode Clock Gating Control (SCGCn)** registers and **Deep-Sleep-Mode Clock Gating Control (DCGCn)** registers if the controller enters a Sleep or Deep-Sleep mode (respectively). If set, the **SCGCn** or **DCGCn** registers are used to control the clocks distributed to the peripherals when the controller is in a sleep mode. Otherwise, the **Run-Mode Clock Gating Control (RCGCn)** registers are used when the controller enters a sleep mode. The **RCGCn** registers are always used to control the clocks in Run mode. This allows peripherals to consume less power when the controller is in a sleep mode and the peripheral is unused.
26:23	SYSDIV	R/W	0xF	System Clock Divisor Specifies which divisor is used to generate the system clock from either the PLL output or the oscillator source (depending on how the `BYPASS` bit in this register is configured). See Table 5-5 on page 174 for bit encodings. If the `SYSDIV` value is less than `MINSYSDIV` (see page 198), and the PLL is being used, then the `MINSYSDIV` value is used as the divisor. If the PLL is not being used, the `SYSDIV` value can be less than `MINSYSDIV`.
22	USESYSDIV	R/W	0	Enable System Clock Divider Use the system clock divider as the source for the system clock. The system clock divider is forced to be used when the PLL is selected as the source. If the `USERCC2` bit in the **RCC2** register is set, then the `SYSDIV2` field in the **RCC2** register is used as the system clock divider rather than the `SYSDIV` field in this register.

Bit/Field	Name	Type	Reset	Description
21:14	reserved	RO	0	Software should not rely on the value of a reserved bit. To provide compatibility with future products, the value of a reserved bit should be preserved across a read-modify-write operation.
13	PWRDN	R/W	1	PLL Power Down This bit connects to the PLL PWRDN input. The reset value of 1 powers down the PLL.
12	reserved	RO	1	Software should not rely on the value of a reserved bit. To provide compatibility with future products, the value of a reserved bit should be preserved across a read-modify-write operation.
11	BYPASS	R/W	1	PLL Bypass Chooses whether the system clock is derived from the PLL output or the OSC source. If set, the clock that drives the system is the OSC source. Otherwise, the clock that drives the system is the PLL output clock divided by the system divider. See Table 5-5 on page 174 for programming guidelines.
10	reserved	RO	0	Software should not rely on the value of a reserved bit. To provide compatibility with future products, the value of a reserved bit should be preserved across a read-modify-write operation.
9:6	XTAL	R/W	0xB	Crystal Value This field specifies the crystal value attached to the main oscillator. The encoding for this field is provided below. Depending on the crystal used, the PLL frequency may not be exactly 400 MHz (see Table 19-9 on page 598 for more information).

Value	Crystal Frequency (MHz) Not Using the PLL	Crystal Frequency (MHz) Using the PLL
0x0	1.000	reserved
0x1	1.8432	reserved
0x2	2.000	reserved
0x3	2.4576	reserved
0x4	3.579545 MHz	
0x5	3.6864 MHz	
0x6	4 MHz	
0x7	4.096 MHz	
0x8	4.9152 MHz	
0x9	5 MHz	
0xA	5.12 MHz	
0xB	6 MHz (reset value)	
0xC	6.144 MHz	
0xD	7.3728 MHz	
0xE	8 MHz	
0xF	8.192 MHz	

Bit/Field	Name	Type	Reset	Description
5:4	OSCSRC	R/W	0x1	Oscillator Source Selects the input source for the OSC. The values are: Value Input Source 0x0 MOSC Main oscillator 0x1 IOSC Internal oscillator (default) 0x2 IOSC/4 Internal oscillator / 4 0x3 30 kHz 30-KHz internal oscillator For additional oscillator sources, see the **RCC2** register.
3:2	reserved	RO	0x0	Software should not rely on the value of a reserved bit. To provide compatibility with future products, the value of a reserved bit should be preserved across a read-modify-write operation.
1	IOSCDIS	R/W	0	Internal Oscillator Disable 0: Internal oscillator (IOSC) is enabled. 1: Internal oscillator is disabled.
0	MOSCDIS	R/W	1	Main Oscillator Disable 0: Main oscillator is enabled . 1: Main oscillator is disabled (default).

Register 9: XTAL to PLL Translation (PLLCFG), offset 0x064

This register provides a means of translating external crystal frequencies into the appropriate PLL settings. This register is initialized during the reset sequence and updated anytime that the `XTAL` field changes in the **Run-Mode Clock Configuration (RCC)** register (see page 188).

The PLL frequency is calculated using the **PLLCFG** field values, as follows:

```
PLLFreq = OSCFreq * F / (R + 1)
```

XTAL to PLL Translation (PLLCFG)

Base 0x400F.E000
Offset 0x064
Type RO, reset -

	31	30	29	28	27	26	25	24	23	22	21	20	19	18	17	16
	reserved															
Type	RO	RO	RO	RO	RO	RO	RO	RO	RO	RO	RO	RO	RO	RO	RO	RO
Reset	0	0	0	0	0	0	0	0	0	0	0	0	0	0	0	0

	15	14	13	12	11	10	9	8	7	6	5	4	3	2	1	0
	reserved		F									R				
Type	RO	RO	RO	RO	RO	RO	RO	RO	RO	RO	RO	RO	RO	RO	RO	RO
Reset	0	0	-	-	-	-	-	-	-	-	-	-	-	-	-	-

Bit/Field	Name	Type	Reset	Description
31:14	reserved	RO	0x0	Software should not rely on the value of a reserved bit. To provide compatibility with future products, the value of a reserved bit should be preserved across a read-modify-write operation.
13:5	F	RO	-	PLL F Value This field specifies the value supplied to the PLL's F input.
4:0	R	RO	-	PLL R Value This field specifies the value supplied to the PLL's R input.

Register 10: Run-Mode Clock Configuration 2 (RCC2), offset 0x070

This register overrides the **RCC** equivalent register fields, as shown in Table 5-8, when the USERCC2 bit is set, allowing the extended capabilities of the **RCC2** register to be used while also providing a means to be backward-compatible to previous parts. Each **RCC2** field that supersedes an **RCC** field is located at the same LSB bit position; however, some **RCC2** fields are larger than the corresponding **RCC** field.

Table 5-8. RCC2 Fields that Override RCC fields

RCC2 Field...	Overrides RCC Field
SYSDIV2, bits[28:23]	SYSDIV, bits[26:23]
PWRDN2, bit[13]	PWRDN, bit[13]
BYPASS2, bit[11]	BYPASS, bit[11]
OSCSRC2, bits[6:4]	OSCSRC, bits[5:4]

Run-Mode Clock Configuration 2 (RCC2)

Base 0x400F.E000
Offset 0x070
Type R/W, reset 0x0780.2810

	31	30	29	28	27	26	25	24	23	22	21	20	19	18	17	16
	USERCC2	reserved		SYSDIV2						reserved						
Type	R/W	RO	RO	R/W	R/W	R/W	R/W	R/W	R/W	RO	RO	RO	RO	RO	RO	RO
Reset	0	0	0	0	0	1	1	1	1	0	0	0	0	0	0	0

	15	14	13	12	11	10	9	8	7	6	5	4	3	2	1	0
	reserved		PWRDN2	reserved	BYPASS2	reserved				OSCSRC2			reserved			
Type	RO	RO	R/W	RO	R/W	RO	RO	RO	RO	R/W	R/W	R/W	RO	RO	RO	RO
Reset	0	0	1	0	1	0	0	0	0	0	0	1	0	0	0	0

Bit/Field	Name	Type	Reset	Description
31	USERCC2	R/W	0	Use RCC2 When set, overrides the **RCC** register fields.
30:29	reserved	RO	0x0	Software should not rely on the value of a reserved bit. To provide compatibility with future products, the value of a reserved bit should be preserved across a read-modify-write operation.
28:23	SYSDIV2	R/W	0x0F	System Clock Divisor Specifies which divisor is used to generate the system clock from either the PLL output or the oscillator source (depending on how the BYPASS2 bit is configured). SYSDIV2 is used for the divisor when both the USESYSDIV bit in the **RCC** register and the USERCC2 bit in this register are set. See Table 5-6 on page 174 for programming guidelines.
22:14	reserved	RO	0x0	Software should not rely on the value of a reserved bit. To provide compatibility with future products, the value of a reserved bit should be preserved across a read-modify-write operation.
13	PWRDN2	R/W	1	Power-Down PLL When set, powers down the PLL.
12	reserved	RO	0	Software should not rely on the value of a reserved bit. To provide compatibility with future products, the value of a reserved bit should be preserved across a read-modify-write operation.

Bit/Field	Name	Type	Reset	Description
11	BYPASS2	R/W	1	Bypass PLL When set, bypasses the PLL for the clock source. See Table 5-6 on page 174 for programming guidelines.
10:7	reserved	RO	0x0	Software should not rely on the value of a reserved bit. To provide compatibility with future products, the value of a reserved bit should be preserved across a read-modify-write operation.
6:4	OSCSRC2	R/W	0x1	Oscillator Source Selects the input source for the OSC. The values are: Value Description 0x0 MOSC Main oscillator 0x1 IOSC Internal oscillator 0x2 IOSC/4 Internal oscillator / 4 0x3 30 kHz 30-kHz internal oscillator 0x4 Reserved 0x5 Reserved 0x6 Reserved 0x7 32 kHz 32.768-kHz external oscillator
3:0	reserved	RO	0	Software should not rely on the value of a reserved bit. To provide compatibility with future products, the value of a reserved bit should be preserved across a read-modify-write operation.

Register 11: Deep Sleep Clock Configuration (DSLPCLKCFG), offset 0x144

This register provides configuration information for the hardware control of Deep Sleep Mode.

Deep Sleep Clock Configuration (DSLPCLKCFG)

Base 0x400F.E000
Offset 0x144
Type R/W, reset 0x0780.0000

	31	30	29	28	27	26	25	24	23	22	21	20	19	18	17	16
	reserved			DSDIVORIDE						reserved						
Type	RO	RO	RO	R/W	R/W	R/W	R/W	R/W	R/W	RO	RO	RO	RO	RO	RO	RO
Reset	0	0	0	0	0	1	1	1	1	0	0	0	0	0	0	0

	15	14	13	12	11	10	9	8	7	6	5	4	3	2	1	0
	reserved									DSOSCSRC			reserved			
Type	RO	RO	RO	RO	RO	RO	RO	RO	RO	R/W	R/W	R/W	RO	RO	RO	RO
Reset	0	0	0	0	0	0	0	0	0	0	0	0	0	0	0	0

Bit/Field	Name	Type	Reset	Description
31:29	reserved	RO	0x0	Software should not rely on the value of a reserved bit. To provide compatibility with future products, the value of a reserved bit should be preserved across a read-modify-write operation.
28:23	DSDIVORIDE	R/W	0x0F	Divider Field Override 6-bit system divider field to override when Deep-Sleep occurs with PLL running.
22:7	reserved	RO	0x0	Software should not rely on the value of a reserved bit. To provide compatibility with future products, the value of a reserved bit should be preserved across a read-modify-write operation.
6:4	DSOSCSRC	R/W	0x0	Clock Source Specifies the clock source during Deep-Sleep mode. Value Description 0x0 MOSC Use main oscillator as source. 0x1 IOSC Use internal 12-MHz oscillator as source. 0x2 Reserved 0x3 30 kHz Use 30-kHz internal oscillator as source. 0x4 Reserved 0x5 Reserved 0x6 Reserved 0x7 32 kHz Use 32.768-kHz external oscillator as source.
3:0	reserved	RO	0x0	Software should not rely on the value of a reserved bit. To provide compatibility with future products, the value of a reserved bit should be preserved across a read-modify-write operation.

Register 12: Device Identification 1 (DID1), offset 0x004

This register identifies the device family, part number, temperature range, pin count, and package type. Each microcontroller is uniquely identified by the combined values of the CLASS field in the **DID0** register and the PARTNO field in the **DID1** register.

Device Identification 1 (DID1)

Base 0x400F.E000
Offset 0x004
Type RO, reset -

	31	30	29	28	27	26	25	24	23	22	21	20	19	18	17	16
	VER				FAM				PARTNO							
Type	RO	RO	RO	RO	RO	RO	RO	RO	RO	RO	RO	RO	RO	RO	RO	RO
Reset	0	0	0	1	0	0	0	0	1	1	1	0	0	0	1	1

	15	14	13	12	11	10	9	8	7	6	5	4	3	2	1	0
	PINCOUNT			reserved					TEMP			PKG		ROHS	QUAL	
Type	RO	RO	RO	RO	RO	RO	RO	RO	RO	RO	RO	RO	RO	RO	RO	RO
Reset	0	1	0	0	0	0	0	0	-	-	-	-	-	1	-	-

Bit/Field	Name	Type	Reset	Description
31:28	VER	RO	0x1	DID1 Version This field defines the **DID1** register format version. The version number is numeric. The value of the VER field is encoded as follows (all other encodings are reserved): Value Description 0x1 Second version of the **DID1** register format.
27:24	FAM	RO	0x0	Family This field provides the family identification of the device within the Luminary Micro product portfolio. The value is encoded as follows (all other encodings are reserved): Value Description 0x0 Stellaris family of microcontollers, that is, all devices with external part numbers starting with LM3S.
23:16	PARTNO	RO	0xE3	Part Number This field provides the part number of the device within the family. The value is encoded as follows (all other encodings are reserved): Value Description 0xE3 LM3S2911
15:13	PINCOUNT	RO	0x2	Package Pin Count This field specifies the number of pins on the device package. The value is encoded as follows (all other encodings are reserved): Value Description 0x2 100-pin or 108-ball package

Bit/Field	Name	Type	Reset	Description
12:8	reserved	RO	0	Software should not rely on the value of a reserved bit. To provide compatibility with future products, the value of a reserved bit should be preserved across a read-modify-write operation.
7:5	TEMP	RO	-	Temperature Range This field specifies the temperature rating of the device. The value is encoded as follows (all other encodings are reserved): Value Description 0x0 Commercial temperature range (0°C to 70°C) 0x1 Industrial temperature range (-40°C to 85°C) 0x2 Extended temperature range (-40°C to 105°C)
4:3	PKG	RO	-	Package Type This field specifies the package type. The value is encoded as follows (all other encodings are reserved): Value Description 0x0 SOIC package 0x1 LQFP package 0x2 BGA package
2	ROHS	RO	1	RoHS-Compliance This bit specifies whether the device is RoHS-compliant. A 1 indicates the part is RoHS-compliant.
1:0	QUAL	RO	-	Qualification Status This field specifies the qualification status of the device. The value is encoded as follows (all other encodings are reserved): Value Description 0x0 Engineering Sample (unqualified) 0x1 Pilot Production (unqualified) 0x2 Fully Qualified

Register 13: Device Capabilities 0 (DC0), offset 0x008

This register is predefined by the part and can be used to verify features.

Device Capabilities 0 (DC0)

Base 0x400F.E000
Offset 0x008
Type RO, reset 0x00FF.007F

	31	30	29	28	27	26	25	24	23	22	21	20	19	18	17	16
	SRAMSZ															
Type	RO	RO	RO	RO	RO	RO	RO	RO	RO	RO	RO	RO	RO	RO	RO	RO
Reset	0	0	0	0	0	0	0	0	1	1	1	1	1	1	1	1

	15	14	13	12	11	10	9	8	7	6	5	4	3	2	1	0
	FLASHSZ															
Type	RO	RO	RO	RO	RO	RO	RO	RO	RO	RO	RO	RO	RO	RO	RO	RO
Reset	0	0	0	0	0	0	0	0	0	1	1	1	1	1	1	1

Bit/Field	Name	Type	Reset	Description
31:16	SRAMSZ	RO	0x00FF	SRAM Size Indicates the size of the on-chip SRAM memory. Value Description 0x00FF 64 KB of SRAM
15:0	FLASHSZ	RO	0x007F	Flash Size Indicates the size of the on-chip flash memory. Value Description 0x007F 256 KB of Flash

Register 14: Device Capabilities 1 (DC1), offset 0x010

This register provides a list of features available in the system. The Stellaris family uses this register format to indicate the availability of the following family features in the specific device: CANs, PWM, ADC, Watchdog timer, Hibernation module, and debug capabilities. This register also indicates the maximum clock frequency and maximum ADC sample rate. The format of this register is consistent with the **RCGC0**, **SCGC0**, and **DCGC0** clock control registers and the **SRCR0** software reset control register.

Device Capabilities 1 (DC1)

Base 0x400F.E000
Offset 0x010
Type RO, reset 0x0100.30DF

	31	30	29	28	27	26	25	24	23	22	21	20	19	18	17	16
	reserved							CAN0	reserved							
Type	RO	RO	RO	RO	RO	RO	RO	RO	RO	RO	RO	RO	RO	RO	RO	RO
Reset	0	0	0	0	0	0	0	1	0	0	0	0	0	0	0	0

	15	14	13	12	11	10	9	8	7	6	5	4	3	2	1	0
	MINSYSDIV				reserved				MPU	HIB	reserved	PLL	WDT	SWO	SWD	JTAG
Type	RO	RO	RO	RO	RO	RO	RO	RO	RO	RO	RO	RO	RO	RO	RO	RO
Reset	0	0	1	1	0	0	0	0	1	1	0	1	1	1	1	1

Bit/Field	Name	Type	Reset	Description
31:25	reserved	RO	0	Software should not rely on the value of a reserved bit. To provide compatibility with future products, the value of a reserved bit should be preserved across a read-modify-write operation.
24	CAN0	RO	1	CAN Module 0 Present When set, indicates that CAN unit 0 is present.
23:16	reserved	RO	0	Software should not rely on the value of a reserved bit. To provide compatibility with future products, the value of a reserved bit should be preserved across a read-modify-write operation.
15:12	MINSYSDIV	RO	0x3	System Clock Divider Minimum 4-bit divider value for system clock. The reset value is hardware-dependent. See the **RCC** register for how to change the system clock divisor using the `SYSDIV` bit. Value Description 0x3 Specifies a 50-MHz CPU clock with a PLL divider of 4.
11:8	reserved	RO	0	Software should not rely on the value of a reserved bit. To provide compatibility with future products, the value of a reserved bit should be preserved across a read-modify-write operation.
7	MPU	RO	1	MPU Present When set, indicates that the Cortex-M3 Memory Protection Unit (MPU) module is present. See the "Cortex-M3 Peripherals" chapter in the Stellaris Data Sheet for details on the MPU.
6	HIB	RO	1	Hibernation Module Present When set, indicates that the Hibernation module is present.

Bit/Field	Name	Type	Reset	Description
5	reserved	RO	0	Software should not rely on the value of a reserved bit. To provide compatibility with future products, the value of a reserved bit should be preserved across a read-modify-write operation.
4	PLL	RO	1	PLL Present When set, indicates that the on-chip Phase Locked Loop (PLL) is present.
3	WDT	RO	1	Watchdog Timer Present When set, indicates that a watchdog timer is present.
2	SWO	RO	1	SWO Trace Port Present When set, indicates that the Serial Wire Output (SWO) trace port is present.
1	SWD	RO	1	SWD Present When set, indicates that the Serial Wire Debugger (SWD) is present.
0	JTAG	RO	1	JTAG Present When set, indicates that the JTAG debugger interface is present.

Register 15: Device Capabilities 2 (DC2), offset 0x014

This register provides a list of features available in the system. The Stellaris family uses this register format to indicate the availability of the following family features in the specific device: Analog Comparators, General-Purpose Timers, I2Cs, QEIs, SSIs, and UARTs. The format of this register is consistent with the **RCGC1**, **SCGC1**, and **DCGC1** clock control registers and the **SRCR1** software reset control register.

Device Capabilities 2 (DC2)

Base 0x400F.E000
Offset 0x014
Type RO, reset 0x030F.5037

	31	30	29	28	27	26	25	24	23	22	21	20	19	18	17	16
	reserved						COMP1	COMP0	reserved				TIMER3	TIMER2	TIMER1	TIMER0
Type	RO	RO	RO	RO	RO	RO	RO	RO	RO	RO	RO	RO	RO	RO	RO	RO
Reset	0	0	0	0	0	0	1	1	0	0	0	0	1	1	1	1

	15	14	13	12	11	10	9	8	7	6	5	4	3	2	1	0
	reserved	I2C1	reserved	I2C0	reserved						SSI1	SSI0	reserved	UART2	UART1	UART0
Type	RO	RO	RO	RO	RO	RO	RO	RO	RO	RO	RO	RO	RO	RO	RO	RO
Reset	0	1	0	1	0	0	0	0	0	0	1	1	0	1	1	1

Bit/Field	Name	Type	Reset	Description
31:26	reserved	RO	0	Software should not rely on the value of a reserved bit. To provide compatibility with future products, the value of a reserved bit should be preserved across a read-modify-write operation.
25	COMP1	RO	1	Analog Comparator 1 Present When set, indicates that analog comparator 1 is present.
24	COMP0	RO	1	Analog Comparator 0 Present When set, indicates that analog comparator 0 is present.
23:20	reserved	RO	0	Software should not rely on the value of a reserved bit. To provide compatibility with future products, the value of a reserved bit should be preserved across a read-modify-write operation.
19	TIMER3	RO	1	Timer 3 Present When set, indicates that General-Purpose Timer module 3 is present.
18	TIMER2	RO	1	Timer 2 Present When set, indicates that General-Purpose Timer module 2 is present.
17	TIMER1	RO	1	Timer 1 Present When set, indicates that General-Purpose Timer module 1 is present.
16	TIMER0	RO	1	Timer 0 Present When set, indicates that General-Purpose Timer module 0 is present.
15	reserved	RO	0	Software should not rely on the value of a reserved bit. To provide compatibility with future products, the value of a reserved bit should be preserved across a read-modify-write operation.
14	I2C1	RO	1	I2C Module 1 Present When set, indicates that I2C module 1 is present.

Bit/Field	Name	Type	Reset	Description
13	reserved	RO	0	Software should not rely on the value of a reserved bit. To provide compatibility with future products, the value of a reserved bit should be preserved across a read-modify-write operation.
12	I2C0	RO	1	I2C Module 0 Present When set, indicates that I2C module 0 is present.
11:6	reserved	RO	0	Software should not rely on the value of a reserved bit. To provide compatibility with future products, the value of a reserved bit should be preserved across a read-modify-write operation.
5	SSI1	RO	1	SSI1 Present When set, indicates that SSI module 1 is present.
4	SSI0	RO	1	SSI0 Present When set, indicates that SSI module 0 is present.
3	reserved	RO	0	Software should not rely on the value of a reserved bit. To provide compatibility with future products, the value of a reserved bit should be preserved across a read-modify-write operation.
2	UART2	RO	1	UART2 Present When set, indicates that UART module 2 is present.
1	UART1	RO	1	UART1 Present When set, indicates that UART module 1 is present.
0	UART0	RO	1	UART0 Present When set, indicates that UART module 0 is present.

Register 16: Device Capabilities 3 (DC3), offset 0x018

This register provides a list of features available in the system. The Stellaris family uses this register format to indicate the availability of the following family features in the specific device: Analog Comparator I/Os, CCP I/Os, ADC I/Os, and PWM I/Os.

Device Capabilities 3 (DC3)

Base 0x400F.E000
Offset 0x018
Type RO, reset 0xBF00.0FC0

	31	30	29	28	27	26	25	24	23	22	21	20	19	18	17	16
	32KHZ	reserved	CCP5	CCP4	CCP3	CCP2	CCP1	CCP0	reserved							
Type	RO	RO	RO	RO	RO	RO	RO	RO	RO	RO	RO	RO	RO	RO	RO	RO
Reset	1	0	1	1	1	1	1	1	0	0	0	0	0	0	0	0

	15	14	13	12	11	10	9	8	7	6	5	4	3	2	1	0
	reserved				C1O	C1PLUS	C1MINUS	C0O	C0PLUS	C0MINUS	reserved					
Type	RO	RO	RO	RO	RO	RO	RO	RO	RO	RO	RO	RO	RO	RO	RO	RO
Reset	0	0	0	0	1	1	1	1	1	1	0	0	0	0	0	0

Bit/Field	Name	Type	Reset	Description
31	32KHZ	RO	1	32KHz Input Clock Available When set, indicates an even CCP pin is present and can be used as a 32-KHz input clock.
30	reserved	RO	0	Software should not rely on the value of a reserved bit. To provide compatibility with future products, the value of a reserved bit should be preserved across a read-modify-write operation.
29	CCP5	RO	1	CCP5 Pin Present When set, indicates that Capture/Compare/PWM pin 5 is present.
28	CCP4	RO	1	CCP4 Pin Present When set, indicates that Capture/Compare/PWM pin 4 is present.
27	CCP3	RO	1	CCP3 Pin Present When set, indicates that Capture/Compare/PWM pin 3 is present.
26	CCP2	RO	1	CCP2 Pin Present When set, indicates that Capture/Compare/PWM pin 2 is present.
25	CCP1	RO	1	CCP1 Pin Present When set, indicates that Capture/Compare/PWM pin 1 is present.
24	CCP0	RO	1	CCP0 Pin Present When set, indicates that Capture/Compare/PWM pin 0 is present.
23:12	reserved	RO	0	Software should not rely on the value of a reserved bit. To provide compatibility with future products, the value of a reserved bit should be preserved across a read-modify-write operation.
11	C1O	RO	1	C1o Pin Present When set, indicates that the analog comparator 1 output pin is present.
10	C1PLUS	RO	1	C1+ Pin Present When set, indicates that the analog comparator 1 (+) input pin is present.

Bit/Field	Name	Type	Reset	Description
9	C1MINUS	RO	1	C1- Pin Present When set, indicates that the analog comparator 1 (-) input pin is present.
8	C0O	RO	1	C0o Pin Present When set, indicates that the analog comparator 0 output pin is present.
7	C0PLUS	RO	1	C0+ Pin Present When set, indicates that the analog comparator 0 (+) input pin is present.
6	C0MINUS	RO	1	C0- Pin Present When set, indicates that the analog comparator 0 (-) input pin is present.
5:0	reserved	RO	0	Software should not rely on the value of a reserved bit. To provide compatibility with future products, the value of a reserved bit should be preserved across a read-modify-write operation.

Register 17: Device Capabilities 4 (DC4), offset 0x01C

This register provides a list of features available in the system. The Stellaris family uses this register format to indicate the availability of the following family features in the specific device: Ethernet MAC and PHY, GPIOs, and CCP I/Os. The format of this register is consistent with the **RCGC2**, **SCGC2**, and **DCGC2** clock control registers and the **SRCR2** software reset control register.

Device Capabilities 4 (DC4)

Base 0x400F.E000
Offset 0x01C
Type RO, reset 0x0000.C0FF

	31	30	29	28	27	26	25	24	23	22	21	20	19	18	17	16
	reserved															
Type	RO	RO	RO	RO	RO	RO	RO	RO	RO	RO	RO	RO	RO	RO	RO	RO
Reset	0	0	0	0	0	0	0	0	0	0	0	0	0	0	0	0

	15	14	13	12	11	10	9	8	7	6	5	4	3	2	1	0
	CCP7	CCP6	reserved						GPIOH	GPIOG	GPIOF	GPIOE	GPIOD	GPIOC	GPIOB	GPIOA
Type	RO	RO	RO	RO	RO	RO	RO	RO	RO	RO	RO	RO	RO	RO	RO	RO
Reset	1	1	0	0	0	0	0	0	1	1	1	1	1	1	1	1

Bit/Field	Name	Type	Reset	Description
31:16	reserved	RO	0	Software should not rely on the value of a reserved bit. To provide compatibility with future products, the value of a reserved bit should be preserved across a read-modify-write operation.
15	CCP7	RO	1	CCP7 Pin Present When set, indicates that Capture/Compare/PWM pin 7 is present.
14	CCP6	RO	1	CCP6 Pin Present When set, indicates that Capture/Compare/PWM pin 6 is present.
13:8	reserved	RO	0	Software should not rely on the value of a reserved bit. To provide compatibility with future products, the value of a reserved bit should be preserved across a read-modify-write operation.
7	GPIOH	RO	1	GPIO Port H Present When set, indicates that GPIO Port H is present.
6	GPIOG	RO	1	GPIO Port G Present When set, indicates that GPIO Port G is present.
5	GPIOF	RO	1	GPIO Port F Present When set, indicates that GPIO Port F is present.
4	GPIOE	RO	1	GPIO Port E Present When set, indicates that GPIO Port E is present.
3	GPIOD	RO	1	GPIO Port D Present When set, indicates that GPIO Port D is present.
2	GPIOC	RO	1	GPIO Port C Present When set, indicates that GPIO Port C is present.
1	GPIOB	RO	1	GPIO Port B Present When set, indicates that GPIO Port B is present.

Bit/Field	Name	Type	Reset	Description
0	GPIOA	RO	1	GPIO Port A Present When set, indicates that GPIO Port A is present.

Register 18: Run Mode Clock Gating Control Register 0 (RCGC0), offset 0x100

This register controls the clock gating logic. Each bit controls a clock enable for a given interface, function, or unit. If set, the unit receives a clock and functions. Otherwise, the unit is unclocked and disabled (saving power). If the unit is unclocked, reads or writes to the unit will generate a bus fault. The reset state of these bits is 0 (unclocked) unless otherwise noted, so that all functional units are disabled. It is the responsibility of software to enable the ports necessary for the application. Note that these registers may contain more bits than there are interfaces, functions, or units to control. This is to assure reasonable code compatibility with other family and future parts. **RCGC0** is the clock configuration register for running operation, **SCGC0** for Sleep operation, and **DCGC0** for Deep-Sleep operation. Setting the ACG bit in the **Run-Mode Clock Configuration (RCC)** register specifies that the system uses sleep modes.

Run Mode Clock Gating Control Register 0 (RCGC0)

Base 0x400F.E000
Offset 0x100
Type R/W, reset 0x00000040

	31	30	29	28	27	26	25	24	23	22	21	20	19	18	17	16
	reserved							CAN0	reserved							
Type	RO	RO	RO	RO	RO	RO	RO	R/W	RO	RO	RO	RO	RO	RO	RO	RO
Reset	0	0	0	0	0	0	0	0	0	0	0	0	0	0	0	0

	15	14	13	12	11	10	9	8	7	6	5	4	3	2	1	0
	reserved									HIB	reserved		WDT	reserved		
Type	RO	RO	RO	RO	RO	RO	RO	RO	RO	R/W	RO	RO	R/W	RO	RO	RO
Reset	0	0	0	0	0	0	0	0	0	1	0	0	0	0	0	0

Bit/Field	Name	Type	Reset	Description
31:25	reserved	RO	0	Software should not rely on the value of a reserved bit. To provide compatibility with future products, the value of a reserved bit should be preserved across a read-modify-write operation.
24	CAN0	R/W	0	CAN0 Clock Gating Control This bit controls the clock gating for CAN unit 0. If set, the unit receives a clock and functions. Otherwise, the unit is unclocked and disabled.
23:7	reserved	RO	0	Software should not rely on the value of a reserved bit. To provide compatibility with future products, the value of a reserved bit should be preserved across a read-modify-write operation.
6	HIB	R/W	1	HIB Clock Gating Control This bit controls the clock gating for the Hibernation module. If set, the unit receives a clock and functions. Otherwise, the unit is unclocked and disabled.
5:4	reserved	RO	0	Software should not rely on the value of a reserved bit. To provide compatibility with future products, the value of a reserved bit should be preserved across a read-modify-write operation.
3	WDT	R/W	0	WDT Clock Gating Control This bit controls the clock gating for the WDT module. If set, the unit receives a clock and functions. Otherwise, the unit is unclocked and disabled. If the unit is unclocked, a read or write to the unit generates a bus fault.

Bit/Field	Name	Type	Reset	Description
2:0	reserved	RO	0	Software should not rely on the value of a reserved bit. To provide compatibility with future products, the value of a reserved bit should be preserved across a read-modify-write operation.

Register 19: Sleep Mode Clock Gating Control Register 0 (SCGC0), offset 0x110

This register controls the clock gating logic. Each bit controls a clock enable for a given interface, function, or unit. If set, the unit receives a clock and functions. Otherwise, the unit is unclocked and disabled (saving power). If the unit is unclocked, reads or writes to the unit will generate a bus fault. The reset state of these bits is 0 (unclocked) unless otherwise noted, so that all functional units are disabled. It is the responsibility of software to enable the ports necessary for the application. Note that these registers may contain more bits than there are interfaces, functions, or units to control. This is to assure reasonable code compatibility with other family and future parts. **RCGC0** is the clock configuration register for running operation, **SCGC0** for Sleep operation, and **DCGC0** for Deep-Sleep operation. Setting the ACG bit in the **Run-Mode Clock Configuration (RCC)** register specifies that the system uses sleep modes.

Sleep Mode Clock Gating Control Register 0 (SCGC0)

Base 0x400F.E000
Offset 0x110
Type R/W, reset 0x00000040

	31	30	29	28	27	26	25	24	23	22	21	20	19	18	17	16
	reserved							CAN0	reserved							
Type	RO	RO	RO	RO	RO	RO	RO	R/W	RO	RO	RO	RO	RO	RO	RO	RO
Reset	0	0	0	0	0	0	0	0	0	0	0	0	0	0	0	0

	15	14	13	12	11	10	9	8	7	6	5	4	3	2	1	0
	reserved									HIB	reserved		WDT	reserved		
Type	RO	RO	RO	RO	RO	RO	RO	RO	RO	R/W	RO	RO	R/W	RO	RO	RO
Reset	0	0	0	0	0	0	0	0	0	1	0	0	0	0	0	0

Bit/Field	Name	Type	Reset	Description
31:25	reserved	RO	0	Software should not rely on the value of a reserved bit. To provide compatibility with future products, the value of a reserved bit should be preserved across a read-modify-write operation.
24	CAN0	R/W	0	CAN0 Clock Gating Control This bit controls the clock gating for CAN unit 0. If set, the unit receives a clock and functions. Otherwise, the unit is unclocked and disabled.
23:7	reserved	RO	0	Software should not rely on the value of a reserved bit. To provide compatibility with future products, the value of a reserved bit should be preserved across a read-modify-write operation.
6	HIB	R/W	1	HIB Clock Gating Control This bit controls the clock gating for the Hibernation module. If set, the unit receives a clock and functions. Otherwise, the unit is unclocked and disabled.
5:4	reserved	RO	0	Software should not rely on the value of a reserved bit. To provide compatibility with future products, the value of a reserved bit should be preserved across a read-modify-write operation.
3	WDT	R/W	0	WDT Clock Gating Control This bit controls the clock gating for the WDT module. If set, the unit receives a clock and functions. Otherwise, the unit is unclocked and disabled. If the unit is unclocked, a read or write to the unit generates a bus fault.

Bit/Field	Name	Type	Reset	Description
2:0	reserved	RO	0	Software should not rely on the value of a reserved bit. To provide compatibility with future products, the value of a reserved bit should be preserved across a read-modify-write operation.

Register 20: Deep Sleep Mode Clock Gating Control Register 0 (DCGC0), offset 0x120

This register controls the clock gating logic. Each bit controls a clock enable for a given interface, function, or unit. If set, the unit receives a clock and functions. Otherwise, the unit is unclocked and disabled (saving power). If the unit is unclocked, reads or writes to the unit will generate a bus fault. The reset state of these bits is 0 (unclocked) unless otherwise noted, so that all functional units are disabled. It is the responsibility of software to enable the ports necessary for the application. Note that these registers may contain more bits than there are interfaces, functions, or units to control. This is to assure reasonable code compatibility with other family and future parts. **RCGC0** is the clock configuration register for running operation, **SCGC0** for Sleep operation, and **DCGC0** for Deep-Sleep operation. Setting the ACG bit in the **Run-Mode Clock Configuration (RCC)** register specifies that the system uses sleep modes.

Deep Sleep Mode Clock Gating Control Register 0 (DCGC0)

Base 0x400F.E000
Offset 0x120
Type R/W, reset 0x00000040

	31	30	29	28	27	26	25	24	23	22	21	20	19	18	17	16
	reserved							CAN0	reserved							
Type	RO	RO	RO	RO	RO	RO	RO	R/W	RO	RO	RO	RO	RO	RO	RO	RO
Reset	0	0	0	0	0	0	0	0	0	0	0	0	0	0	0	0

	15	14	13	12	11	10	9	8	7	6	5	4	3	2	1	0
	reserved									HIB	reserved		WDT	reserved		
Type	RO	RO	RO	RO	RO	RO	RO	RO	RO	R/W	RO	RO	R/W	RO	RO	RO
Reset	0	0	0	0	0	0	0	0	0	1	0	0	0	0	0	0

Bit/Field	Name	Type	Reset	Description
31:25	reserved	RO	0	Software should not rely on the value of a reserved bit. To provide compatibility with future products, the value of a reserved bit should be preserved across a read-modify-write operation.
24	CAN0	R/W	0	CAN0 Clock Gating Control This bit controls the clock gating for CAN unit 0. If set, the unit receives a clock and functions. Otherwise, the unit is unclocked and disabled.
23:7	reserved	RO	0	Software should not rely on the value of a reserved bit. To provide compatibility with future products, the value of a reserved bit should be preserved across a read-modify-write operation.
6	HIB	R/W	1	HIB Clock Gating Control This bit controls the clock gating for the Hibernation module. If set, the unit receives a clock and functions. Otherwise, the unit is unclocked and disabled.
5:4	reserved	RO	0	Software should not rely on the value of a reserved bit. To provide compatibility with future products, the value of a reserved bit should be preserved across a read-modify-write operation.
3	WDT	R/W	0	WDT Clock Gating Control This bit controls the clock gating for the WDT module. If set, the unit receives a clock and functions. Otherwise, the unit is unclocked and disabled. If the unit is unclocked, a read or write to the unit generates a bus fault.

Bit/Field	Name	Type	Reset	Description
2:0	reserved	RO	0	Software should not rely on the value of a reserved bit. To provide compatibility with future products, the value of a reserved bit should be preserved across a read-modify-write operation.

Register 21: Run Mode Clock Gating Control Register 1 (RCGC1), offset 0x104

This register controls the clock gating logic. Each bit controls a clock enable for a given interface, function, or unit. If set, the unit receives a clock and functions. Otherwise, the unit is unclocked and disabled (saving power). If the unit is unclocked, reads or writes to the unit will generate a bus fault. The reset state of these bits is 0 (unclocked) unless otherwise noted, so that all functional units are disabled. It is the responsibility of software to enable the ports necessary for the application. Note that these registers may contain more bits than there are interfaces, functions, or units to control. This is to assure reasonable code compatibility with other family and future parts. **RCGC1** is the clock configuration register for running operation, **SCGC1** for Sleep operation, and **DCGC1** for Deep-Sleep operation. Setting the `ACG` bit in the **Run-Mode Clock Configuration (RCC)** register specifies that the system uses sleep modes.

Run Mode Clock Gating Control Register 1 (RCGC1)

Base 0x400F.E000
Offset 0x104
Type R/W, reset 0x00000000

	31	30	29	28	27	26	25	24	23	22	21	20	19	18	17	16
	reserved						COMP1	COMP0	reserved				TIMER3	TIMER2	TIMER1	TIMER0
Type	RO	RO	RO	RO	RO	RO	R/W	R/W	RO	RO	RO	RO	R/W	R/W	R/W	R/W
Reset	0	0	0	0	0	0	0	0	0	0	0	0	0	0	0	0

	15	14	13	12	11	10	9	8	7	6	5	4	3	2	1	0
	reserved	I2C1	reserved	I2C0	reserved						SSI1	SSI0	reserved	UART2	UART1	UART0
Type	RO	R/W	RO	R/W	RO	RO	RO	RO	RO	RO	R/W	R/W	RO	R/W	R/W	R/W
Reset	0	0	0	0	0	0	0	0	0	0	0	0	0	0	0	0

Bit/Field	Name	Type	Reset	Description
31:26	reserved	RO	0	Software should not rely on the value of a reserved bit. To provide compatibility with future products, the value of a reserved bit should be preserved across a read-modify-write operation.
25	COMP1	R/W	0	Analog Comparator 1 Clock Gating This bit controls the clock gating for analog comparator 1. If set, the unit receives a clock and functions. Otherwise, the unit is unclocked and disabled. If the unit is unclocked, reads or writes to the unit will generate a bus fault.
24	COMP0	R/W	0	Analog Comparator 0 Clock Gating This bit controls the clock gating for analog comparator 0. If set, the unit receives a clock and functions. Otherwise, the unit is unclocked and disabled. If the unit is unclocked, reads or writes to the unit will generate a bus fault.
23:20	reserved	RO	0	Software should not rely on the value of a reserved bit. To provide compatibility with future products, the value of a reserved bit should be preserved across a read-modify-write operation.
19	TIMER3	R/W	0	Timer 3 Clock Gating Control This bit controls the clock gating for General-Purpose Timer module 3. If set, the unit receives a clock and functions. Otherwise, the unit is unclocked and disabled. If the unit is unclocked, reads or writes to the unit will generate a bus fault.

Bit/Field	Name	Type	Reset	Description
18	TIMER2	R/W	0	Timer 2 Clock Gating Control This bit controls the clock gating for General-Purpose Timer module 2. If set, the unit receives a clock and functions. Otherwise, the unit is unclocked and disabled. If the unit is unclocked, reads or writes to the unit will generate a bus fault.
17	TIMER1	R/W	0	Timer 1 Clock Gating Control This bit controls the clock gating for General-Purpose Timer module 1. If set, the unit receives a clock and functions. Otherwise, the unit is unclocked and disabled. If the unit is unclocked, reads or writes to the unit will generate a bus fault.
16	TIMER0	R/W	0	Timer 0 Clock Gating Control This bit controls the clock gating for General-Purpose Timer module 0. If set, the unit receives a clock and functions. Otherwise, the unit is unclocked and disabled. If the unit is unclocked, reads or writes to the unit will generate a bus fault.
15	reserved	RO	0	Software should not rely on the value of a reserved bit. To provide compatibility with future products, the value of a reserved bit should be preserved across a read-modify-write operation.
14	I2C1	R/W	0	I2C1 Clock Gating Control This bit controls the clock gating for I2C module 1. If set, the unit receives a clock and functions. Otherwise, the unit is unclocked and disabled. If the unit is unclocked, reads or writes to the unit will generate a bus fault.
13	reserved	RO	0	Software should not rely on the value of a reserved bit. To provide compatibility with future products, the value of a reserved bit should be preserved across a read-modify-write operation.
12	I2C0	R/W	0	I2C0 Clock Gating Control This bit controls the clock gating for I2C module 0. If set, the unit receives a clock and functions. Otherwise, the unit is unclocked and disabled. If the unit is unclocked, reads or writes to the unit will generate a bus fault.
11:6	reserved	RO	0	Software should not rely on the value of a reserved bit. To provide compatibility with future products, the value of a reserved bit should be preserved across a read-modify-write operation.
5	SSI1	R/W	0	SSI1 Clock Gating Control This bit controls the clock gating for SSI module 1. If set, the unit receives a clock and functions. Otherwise, the unit is unclocked and disabled. If the unit is unclocked, reads or writes to the unit will generate a bus fault.
4	SSI0	R/W	0	SSI0 Clock Gating Control This bit controls the clock gating for SSI module 0. If set, the unit receives a clock and functions. Otherwise, the unit is unclocked and disabled. If the unit is unclocked, reads or writes to the unit will generate a bus fault.
3	reserved	RO	0	Software should not rely on the value of a reserved bit. To provide compatibility with future products, the value of a reserved bit should be preserved across a read-modify-write operation.

Bit/Field	Name	Type	Reset	Description
2	UART2	R/W	0	UART2 Clock Gating Control This bit controls the clock gating for UART module 2. If set, the unit receives a clock and functions. Otherwise, the unit is unclocked and disabled. If the unit is unclocked, reads or writes to the unit will generate a bus fault.
1	UART1	R/W	0	UART1 Clock Gating Control This bit controls the clock gating for UART module 1. If set, the unit receives a clock and functions. Otherwise, the unit is unclocked and disabled. If the unit is unclocked, reads or writes to the unit will generate a bus fault.
0	UART0	R/W	0	UART0 Clock Gating Control This bit controls the clock gating for UART module 0. If set, the unit receives a clock and functions. Otherwise, the unit is unclocked and disabled. If the unit is unclocked, reads or writes to the unit will generate a bus fault.

Register 22: Sleep Mode Clock Gating Control Register 1 (SCGC1), offset 0x114

This register controls the clock gating logic. Each bit controls a clock enable for a given interface, function, or unit. If set, the unit receives a clock and functions. Otherwise, the unit is unclocked and disabled (saving power). If the unit is unclocked, reads or writes to the unit will generate a bus fault. The reset state of these bits is 0 (unclocked) unless otherwise noted, so that all functional units are disabled. It is the responsibility of software to enable the ports necessary for the application. Note that these registers may contain more bits than there are interfaces, functions, or units to control. This is to assure reasonable code compatibility with other family and future parts. **RCGC1** is the clock configuration register for running operation, **SCGC1** for Sleep operation, and **DCGC1** for Deep-Sleep operation. Setting the ACG bit in the **Run-Mode Clock Configuration (RCC)** register specifies that the system uses sleep modes.

Sleep Mode Clock Gating Control Register 1 (SCGC1)

Base 0x400F.E000
Offset 0x114
Type R/W, reset 0x00000000

	31	30	29	28	27	26	25	24	23	22	21	20	19	18	17	16
	reserved						COMP1	COMP0	reserved				TIMER3	TIMER2	TIMER1	TIMER0
Type	RO	RO	RO	RO	RO	RO	R/W	R/W	RO	RO	RO	RO	R/W	R/W	R/W	R/W
Reset	0	0	0	0	0	0	0	0	0	0	0	0	0	0	0	0

	15	14	13	12	11	10	9	8	7	6	5	4	3	2	1	0
	reserved	I2C1	reserved	I2C0	reserved						SSI1	SSI0	reserved	UART2	UART1	UART0
Type	RO	R/W	RO	R/W	RO	RO	RO	RO	RO	RO	R/W	R/W	RO	R/W	R/W	R/W
Reset	0	0	0	0	0	0	0	0	0	0	0	0	0	0	0	0

Bit/Field	Name	Type	Reset	Description
31:26	reserved	RO	0	Software should not rely on the value of a reserved bit. To provide compatibility with future products, the value of a reserved bit should be preserved across a read-modify-write operation.
25	COMP1	R/W	0	Analog Comparator 1 Clock Gating This bit controls the clock gating for analog comparator 1. If set, the unit receives a clock and functions. Otherwise, the unit is unclocked and disabled. If the unit is unclocked, reads or writes to the unit will generate a bus fault.
24	COMP0	R/W	0	Analog Comparator 0 Clock Gating This bit controls the clock gating for analog comparator 0. If set, the unit receives a clock and functions. Otherwise, the unit is unclocked and disabled. If the unit is unclocked, reads or writes to the unit will generate a bus fault.
23:20	reserved	RO	0	Software should not rely on the value of a reserved bit. To provide compatibility with future products, the value of a reserved bit should be preserved across a read-modify-write operation.
19	TIMER3	R/W	0	Timer 3 Clock Gating Control This bit controls the clock gating for General-Purpose Timer module 3. If set, the unit receives a clock and functions. Otherwise, the unit is unclocked and disabled. If the unit is unclocked, reads or writes to the unit will generate a bus fault.

Bit/Field	Name	Type	Reset	Description
18	TIMER2	R/W	0	Timer 2 Clock Gating Control This bit controls the clock gating for General-Purpose Timer module 2. If set, the unit receives a clock and functions. Otherwise, the unit is unclocked and disabled. If the unit is unclocked, reads or writes to the unit will generate a bus fault.
17	TIMER1	R/W	0	Timer 1 Clock Gating Control This bit controls the clock gating for General-Purpose Timer module 1. If set, the unit receives a clock and functions. Otherwise, the unit is unclocked and disabled. If the unit is unclocked, reads or writes to the unit will generate a bus fault.
16	TIMER0	R/W	0	Timer 0 Clock Gating Control This bit controls the clock gating for General-Purpose Timer module 0. If set, the unit receives a clock and functions. Otherwise, the unit is unclocked and disabled. If the unit is unclocked, reads or writes to the unit will generate a bus fault.
15	reserved	RO	0	Software should not rely on the value of a reserved bit. To provide compatibility with future products, the value of a reserved bit should be preserved across a read-modify-write operation.
14	I2C1	R/W	0	I2C1 Clock Gating Control This bit controls the clock gating for I2C module 1. If set, the unit receives a clock and functions. Otherwise, the unit is unclocked and disabled. If the unit is unclocked, reads or writes to the unit will generate a bus fault.
13	reserved	RO	0	Software should not rely on the value of a reserved bit. To provide compatibility with future products, the value of a reserved bit should be preserved across a read-modify-write operation.
12	I2C0	R/W	0	I2C0 Clock Gating Control This bit controls the clock gating for I2C module 0. If set, the unit receives a clock and functions. Otherwise, the unit is unclocked and disabled. If the unit is unclocked, reads or writes to the unit will generate a bus fault.
11:6	reserved	RO	0	Software should not rely on the value of a reserved bit. To provide compatibility with future products, the value of a reserved bit should be preserved across a read-modify-write operation.
5	SSI1	R/W	0	SSI1 Clock Gating Control This bit controls the clock gating for SSI module 1. If set, the unit receives a clock and functions. Otherwise, the unit is unclocked and disabled. If the unit is unclocked, reads or writes to the unit will generate a bus fault.
4	SSI0	R/W	0	SSI0 Clock Gating Control This bit controls the clock gating for SSI module 0. If set, the unit receives a clock and functions. Otherwise, the unit is unclocked and disabled. If the unit is unclocked, reads or writes to the unit will generate a bus fault.
3	reserved	RO	0	Software should not rely on the value of a reserved bit. To provide compatibility with future products, the value of a reserved bit should be preserved across a read-modify-write operation.

Bit/Field	Name	Type	Reset	Description
2	UART2	R/W	0	UART2 Clock Gating Control This bit controls the clock gating for UART module 2. If set, the unit receives a clock and functions. Otherwise, the unit is unclocked and disabled. If the unit is unclocked, reads or writes to the unit will generate a bus fault.
1	UART1	R/W	0	UART1 Clock Gating Control This bit controls the clock gating for UART module 1. If set, the unit receives a clock and functions. Otherwise, the unit is unclocked and disabled. If the unit is unclocked, reads or writes to the unit will generate a bus fault.
0	UART0	R/W	0	UART0 Clock Gating Control This bit controls the clock gating for UART module 0. If set, the unit receives a clock and functions. Otherwise, the unit is unclocked and disabled. If the unit is unclocked, reads or writes to the unit will generate a bus fault.

Register 23: Deep Sleep Mode Clock Gating Control Register 1 (DCGC1), offset 0x124

This register controls the clock gating logic. Each bit controls a clock enable for a given interface, function, or unit. If set, the unit receives a clock and functions. Otherwise, the unit is unclocked and disabled (saving power). If the unit is unclocked, reads or writes to the unit will generate a bus fault. The reset state of these bits is 0 (unclocked) unless otherwise noted, so that all functional units are disabled. It is the responsibility of software to enable the ports necessary for the application. Note that these registers may contain more bits than there are interfaces, functions, or units to control. This is to assure reasonable code compatibility with other family and future parts. **RCGC1** is the clock configuration register for running operation, **SCGC1** for Sleep operation, and **DCGC1** for Deep-Sleep operation. Setting the ACG bit in the **Run-Mode Clock Configuration (RCC)** register specifies that the system uses sleep modes.

Deep Sleep Mode Clock Gating Control Register 1 (DCGC1)

Base 0x400F.E000
Offset 0x124
Type R/W, reset 0x00000000

	31	30	29	28	27	26	25	24	23	22	21	20	19	18	17	16
	reserved						COMP1	COMP0	reserved				TIMER3	TIMER2	TIMER1	TIMER0
Type	RO	RO	RO	RO	RO	RO	R/W	R/W	RO	RO	RO	RO	R/W	R/W	R/W	R/W
Reset	0	0	0	0	0	0	0	0	0	0	0	0	0	0	0	0

	15	14	13	12	11	10	9	8	7	6	5	4	3	2	1	0
	reserved	I2C1	reserved	I2C0	reserved						SSI1	SSI0	reserved	UART2	UART1	UART0
Type	RO	R/W	RO	R/W	RO	RO	RO	RO	RO	RO	R/W	R/W	RO	R/W	R/W	R/W
Reset	0	0	0	0	0	0	0	0	0	0	0	0	0	0	0	0

Bit/Field	Name	Type	Reset	Description
31:26	reserved	RO	0	Software should not rely on the value of a reserved bit. To provide compatibility with future products, the value of a reserved bit should be preserved across a read-modify-write operation.
25	COMP1	R/W	0	Analog Comparator 1 Clock Gating This bit controls the clock gating for analog comparator 1. If set, the unit receives a clock and functions. Otherwise, the unit is unclocked and disabled. If the unit is unclocked, reads or writes to the unit will generate a bus fault.
24	COMP0	R/W	0	Analog Comparator 0 Clock Gating This bit controls the clock gating for analog comparator 0. If set, the unit receives a clock and functions. Otherwise, the unit is unclocked and disabled. If the unit is unclocked, reads or writes to the unit will generate a bus fault.
23:20	reserved	RO	0	Software should not rely on the value of a reserved bit. To provide compatibility with future products, the value of a reserved bit should be preserved across a read-modify-write operation.
19	TIMER3	R/W	0	Timer 3 Clock Gating Control This bit controls the clock gating for General-Purpose Timer module 3. If set, the unit receives a clock and functions. Otherwise, the unit is unclocked and disabled. If the unit is unclocked, reads or writes to the unit will generate a bus fault.

Bit/Field	Name	Type	Reset	Description
18	TIMER2	R/W	0	Timer 2 Clock Gating Control This bit controls the clock gating for General-Purpose Timer module 2. If set, the unit receives a clock and functions. Otherwise, the unit is unclocked and disabled. If the unit is unclocked, reads or writes to the unit will generate a bus fault.
17	TIMER1	R/W	0	Timer 1 Clock Gating Control This bit controls the clock gating for General-Purpose Timer module 1. If set, the unit receives a clock and functions. Otherwise, the unit is unclocked and disabled. If the unit is unclocked, reads or writes to the unit will generate a bus fault.
16	TIMER0	R/W	0	Timer 0 Clock Gating Control This bit controls the clock gating for General-Purpose Timer module 0. If set, the unit receives a clock and functions. Otherwise, the unit is unclocked and disabled. If the unit is unclocked, reads or writes to the unit will generate a bus fault.
15	reserved	RO	0	Software should not rely on the value of a reserved bit. To provide compatibility with future products, the value of a reserved bit should be preserved across a read-modify-write operation.
14	I2C1	R/W	0	I2C1 Clock Gating Control This bit controls the clock gating for I2C module 1. If set, the unit receives a clock and functions. Otherwise, the unit is unclocked and disabled. If the unit is unclocked, reads or writes to the unit will generate a bus fault.
13	reserved	RO	0	Software should not rely on the value of a reserved bit. To provide compatibility with future products, the value of a reserved bit should be preserved across a read-modify-write operation.
12	I2C0	R/W	0	I2C0 Clock Gating Control This bit controls the clock gating for I2C module 0. If set, the unit receives a clock and functions. Otherwise, the unit is unclocked and disabled. If the unit is unclocked, reads or writes to the unit will generate a bus fault.
11:6	reserved	RO	0	Software should not rely on the value of a reserved bit. To provide compatibility with future products, the value of a reserved bit should be preserved across a read-modify-write operation.
5	SSI1	R/W	0	SSI1 Clock Gating Control This bit controls the clock gating for SSI module 1. If set, the unit receives a clock and functions. Otherwise, the unit is unclocked and disabled. If the unit is unclocked, reads or writes to the unit will generate a bus fault.
4	SSI0	R/W	0	SSI0 Clock Gating Control This bit controls the clock gating for SSI module 0. If set, the unit receives a clock and functions. Otherwise, the unit is unclocked and disabled. If the unit is unclocked, reads or writes to the unit will generate a bus fault.
3	reserved	RO	0	Software should not rely on the value of a reserved bit. To provide compatibility with future products, the value of a reserved bit should be preserved across a read-modify-write operation.

Bit/Field	Name	Type	Reset	Description
2	UART2	R/W	0	UART2 Clock Gating Control This bit controls the clock gating for UART module 2. If set, the unit receives a clock and functions. Otherwise, the unit is unclocked and disabled. If the unit is unclocked, reads or writes to the unit will generate a bus fault.
1	UART1	R/W	0	UART1 Clock Gating Control This bit controls the clock gating for UART module 1. If set, the unit receives a clock and functions. Otherwise, the unit is unclocked and disabled. If the unit is unclocked, reads or writes to the unit will generate a bus fault.
0	UART0	R/W	0	UART0 Clock Gating Control This bit controls the clock gating for UART module 0. If set, the unit receives a clock and functions. Otherwise, the unit is unclocked and disabled. If the unit is unclocked, reads or writes to the unit will generate a bus fault.

Register 24: Run Mode Clock Gating Control Register 2 (RCGC2), offset 0x108

This register controls the clock gating logic. Each bit controls a clock enable for a given interface, function, or unit. If set, the unit receives a clock and functions. Otherwise, the unit is unclocked and disabled (saving power). If the unit is unclocked, reads or writes to the unit will generate a bus fault. The reset state of these bits is 0 (unclocked) unless otherwise noted, so that all functional units are disabled. It is the responsibility of software to enable the ports necessary for the application. Note that these registers may contain more bits than there are interfaces, functions, or units to control. This is to assure reasonable code compatibility with other family and future parts. **RCGC2** is the clock configuration register for running operation, **SCGC2** for Sleep operation, and **DCGC2** for Deep-Sleep operation. Setting the `ACG` bit in the **Run-Mode Clock Configuration (RCC)** register specifies that the system uses sleep modes.

Run Mode Clock Gating Control Register 2 (RCGC2)

Base 0x400F.E000
Offset 0x108
Type R/W, reset 0x00000000

	31	30	29	28	27	26	25	24	23	22	21	20	19	18	17	16
	reserved															
Type	RO	RO	RO	RO	RO	RO	RO	RO	RO	RO	RO	RO	RO	RO	RO	RO
Reset	0	0	0	0	0	0	0	0	0	0	0	0	0	0	0	0

	15	14	13	12	11	10	9	8	7	6	5	4	3	2	1	0
	reserved								GPIOH	GPIOG	GPIOF	GPIOE	GPIOD	GPIOC	GPIOB	GPIOA
Type	RO	RO	RO	RO	RO	RO	RO	RO	R/W	R/W	R/W	R/W	R/W	R/W	R/W	R/W
Reset	0	0	0	0	0	0	0	0	0	0	0	0	0	0	0	0

Bit/Field	Name	Type	Reset	Description
31:8	reserved	RO	0	Software should not rely on the value of a reserved bit. To provide compatibility with future products, the value of a reserved bit should be preserved across a read-modify-write operation.
7	GPIOH	R/W	0	Port H Clock Gating Control This bit controls the clock gating for Port H. If set, the unit receives a clock and functions. Otherwise, the unit is unclocked and disabled. If the unit is unclocked, reads or writes to the unit will generate a bus fault.
6	GPIOG	R/W	0	Port G Clock Gating Control This bit controls the clock gating for Port G. If set, the unit receives a clock and functions. Otherwise, the unit is unclocked and disabled. If the unit is unclocked, reads or writes to the unit will generate a bus fault.
5	GPIOF	R/W	0	Port F Clock Gating Control This bit controls the clock gating for Port F. If set, the unit receives a clock and functions. Otherwise, the unit is unclocked and disabled. If the unit is unclocked, reads or writes to the unit will generate a bus fault.
4	GPIOE	R/W	0	Port E Clock Gating Control This bit controls the clock gating for Port E. If set, the unit receives a clock and functions. Otherwise, the unit is unclocked and disabled. If the unit is unclocked, reads or writes to the unit will generate a bus fault.
3	GPIOD	R/W	0	Port D Clock Gating Control This bit controls the clock gating for Port D. If set, the unit receives a clock and functions. Otherwise, the unit is unclocked and disabled. If the unit is unclocked, reads or writes to the unit will generate a bus fault.

Bit/Field	Name	Type	Reset	Description
2	GPIOC	R/W	0	Port C Clock Gating Control This bit controls the clock gating for Port C. If set, the unit receives a clock and functions. Otherwise, the unit is unclocked and disabled. If the unit is unclocked, reads or writes to the unit will generate a bus fault.
1	GPIOB	R/W	0	Port B Clock Gating Control This bit controls the clock gating for Port B. If set, the unit receives a clock and functions. Otherwise, the unit is unclocked and disabled. If the unit is unclocked, reads or writes to the unit will generate a bus fault.
0	GPIOA	R/W	0	Port A Clock Gating Control This bit controls the clock gating for Port A. If set, the unit receives a clock and functions. Otherwise, the unit is unclocked and disabled. If the unit is unclocked, reads or writes to the unit will generate a bus fault.

Register 25: Sleep Mode Clock Gating Control Register 2 (SCGC2), offset 0x118

This register controls the clock gating logic. Each bit controls a clock enable for a given interface, function, or unit. If set, the unit receives a clock and functions. Otherwise, the unit is unclocked and disabled (saving power). If the unit is unclocked, reads or writes to the unit will generate a bus fault. The reset state of these bits is 0 (unclocked) unless otherwise noted, so that all functional units are disabled. It is the responsibility of software to enable the ports necessary for the application. Note that these registers may contain more bits than there are interfaces, functions, or units to control. This is to assure reasonable code compatibility with other family and future parts. **RCGC2** is the clock configuration register for running operation, **SCGC2** for Sleep operation, and **DCGC2** for Deep-Sleep operation. Setting the ACG bit in the **Run-Mode Clock Configuration (RCC)** register specifies that the system uses sleep modes.

Sleep Mode Clock Gating Control Register 2 (SCGC2)

Base 0x400F.E000
Offset 0x118
Type R/W, reset 0x00000000

	31	30	29	28	27	26	25	24	23	22	21	20	19	18	17	16
	reserved															
Type	RO	RO	RO	RO	RO	RO	RO	RO	RO	RO	RO	RO	RO	RO	RO	RO
Reset	0	0	0	0	0	0	0	0	0	0	0	0	0	0	0	0

	15	14	13	12	11	10	9	8	7	6	5	4	3	2	1	0
	reserved								GPIOH	GPIOG	GPIOF	GPIOE	GPIOD	GPIOC	GPIOB	GPIOA
Type	RO	RO	RO	RO	RO	RO	RO	RO	R/W	R/W	R/W	R/W	R/W	R/W	R/W	R/W
Reset	0	0	0	0	0	0	0	0	0	0	0	0	0	0	0	0

Bit/Field	Name	Type	Reset	Description
31:8	reserved	RO	0	Software should not rely on the value of a reserved bit. To provide compatibility with future products, the value of a reserved bit should be preserved across a read-modify-write operation.
7	GPIOH	R/W	0	Port H Clock Gating Control This bit controls the clock gating for Port H. If set, the unit receives a clock and functions. Otherwise, the unit is unclocked and disabled. If the unit is unclocked, reads or writes to the unit will generate a bus fault.
6	GPIOG	R/W	0	Port G Clock Gating Control This bit controls the clock gating for Port G. If set, the unit receives a clock and functions. Otherwise, the unit is unclocked and disabled. If the unit is unclocked, reads or writes to the unit will generate a bus fault.
5	GPIOF	R/W	0	Port F Clock Gating Control This bit controls the clock gating for Port F. If set, the unit receives a clock and functions. Otherwise, the unit is unclocked and disabled. If the unit is unclocked, reads or writes to the unit will generate a bus fault.
4	GPIOE	R/W	0	Port E Clock Gating Control This bit controls the clock gating for Port E. If set, the unit receives a clock and functions. Otherwise, the unit is unclocked and disabled. If the unit is unclocked, reads or writes to the unit will generate a bus fault.

Bit/Field	Name	Type	Reset	Description
3	GPIOD	R/W	0	Port D Clock Gating Control This bit controls the clock gating for Port D. If set, the unit receives a clock and functions. Otherwise, the unit is unclocked and disabled. If the unit is unclocked, reads or writes to the unit will generate a bus fault.
2	GPIOC	R/W	0	Port C Clock Gating Control This bit controls the clock gating for Port C. If set, the unit receives a clock and functions. Otherwise, the unit is unclocked and disabled. If the unit is unclocked, reads or writes to the unit will generate a bus fault.
1	GPIOB	R/W	0	Port B Clock Gating Control This bit controls the clock gating for Port B. If set, the unit receives a clock and functions. Otherwise, the unit is unclocked and disabled. If the unit is unclocked, reads or writes to the unit will generate a bus fault.
0	GPIOA	R/W	0	Port A Clock Gating Control This bit controls the clock gating for Port A. If set, the unit receives a clock and functions. Otherwise, the unit is unclocked and disabled. If the unit is unclocked, reads or writes to the unit will generate a bus fault.

Register 26: Deep Sleep Mode Clock Gating Control Register 2 (DCGC2), offset 0x128

This register controls the clock gating logic. Each bit controls a clock enable for a given interface, function, or unit. If set, the unit receives a clock and functions. Otherwise, the unit is unclocked and disabled (saving power). If the unit is unclocked, reads or writes to the unit will generate a bus fault. The reset state of these bits is 0 (unclocked) unless otherwise noted, so that all functional units are disabled. It is the responsibility of software to enable the ports necessary for the application. Note that these registers may contain more bits than there are interfaces, functions, or units to control. This is to assure reasonable code compatibility with other family and future parts. **RCGC2** is the clock configuration register for running operation, **SCGC2** for Sleep operation, and **DCGC2** for Deep-Sleep operation. Setting the ACG bit in the **Run-Mode Clock Configuration (RCC)** register specifies that the system uses sleep modes.

Deep Sleep Mode Clock Gating Control Register 2 (DCGC2)

Base 0x400F.E000
Offset 0x128
Type R/W, reset 0x00000000

	31	30	29	28	27	26	25	24	23	22	21	20	19	18	17	16
	reserved															
Type	RO	RO	RO	RO	RO	RO	RO	RO	RO	RO	RO	RO	RO	RO	RO	RO
Reset	0	0	0	0	0	0	0	0	0	0	0	0	0	0	0	0

	15	14	13	12	11	10	9	8	7	6	5	4	3	2	1	0
	reserved								GPIOH	GPIOG	GPIOF	GPIOE	GPIOD	GPIOC	GPIOB	GPIOA
Type	RO	RO	RO	RO	RO	RO	RO	RO	R/W	R/W	R/W	R/W	R/W	R/W	R/W	R/W
Reset	0	0	0	0	0	0	0	0	0	0	0	0	0	0	0	0

Bit/Field	Name	Type	Reset	Description
31:8	reserved	RO	0	Software should not rely on the value of a reserved bit. To provide compatibility with future products, the value of a reserved bit should be preserved across a read-modify-write operation.
7	GPIOH	R/W	0	Port H Clock Gating Control This bit controls the clock gating for Port H. If set, the unit receives a clock and functions. Otherwise, the unit is unclocked and disabled. If the unit is unclocked, reads or writes to the unit will generate a bus fault.
6	GPIOG	R/W	0	Port G Clock Gating Control This bit controls the clock gating for Port G. If set, the unit receives a clock and functions. Otherwise, the unit is unclocked and disabled. If the unit is unclocked, reads or writes to the unit will generate a bus fault.
5	GPIOF	R/W	0	Port F Clock Gating Control This bit controls the clock gating for Port F. If set, the unit receives a clock and functions. Otherwise, the unit is unclocked and disabled. If the unit is unclocked, reads or writes to the unit will generate a bus fault.
4	GPIOE	R/W	0	Port E Clock Gating Control This bit controls the clock gating for Port E. If set, the unit receives a clock and functions. Otherwise, the unit is unclocked and disabled. If the unit is unclocked, reads or writes to the unit will generate a bus fault.

Bit/Field	Name	Type	Reset	Description
3	GPIOD	R/W	0	Port D Clock Gating Control This bit controls the clock gating for Port D. If set, the unit receives a clock and functions. Otherwise, the unit is unclocked and disabled. If the unit is unclocked, reads or writes to the unit will generate a bus fault.
2	GPIOC	R/W	0	Port C Clock Gating Control This bit controls the clock gating for Port C. If set, the unit receives a clock and functions. Otherwise, the unit is unclocked and disabled. If the unit is unclocked, reads or writes to the unit will generate a bus fault.
1	GPIOB	R/W	0	Port B Clock Gating Control This bit controls the clock gating for Port B. If set, the unit receives a clock and functions. Otherwise, the unit is unclocked and disabled. If the unit is unclocked, reads or writes to the unit will generate a bus fault.
0	GPIOA	R/W	0	Port A Clock Gating Control This bit controls the clock gating for Port A. If set, the unit receives a clock and functions. Otherwise, the unit is unclocked and disabled. If the unit is unclocked, reads or writes to the unit will generate a bus fault.

Register 27: Software Reset Control 0 (SRCR0), offset 0x040

Writes to this register are masked by the bits in the **Device Capabilities 1 (DC1)** register.

Software Reset Control 0 (SRCR0)

Base 0x400F.E000
Offset 0x040
Type R/W, reset 0x00000000

	31	30	29	28	27	26	25	24	23	22	21	20	19	18	17	16
	reserved							CAN0	reserved							
Type	RO	RO	RO	RO	RO	RO	RO	R/W	RO	RO	RO	RO	RO	RO	RO	RO
Reset	0	0	0	0	0	0	0	0	0	0	0	0	0	0	0	0

	15	14	13	12	11	10	9	8	7	6	5	4	3	2	1	0
	reserved									HIB	reserved		WDT	reserved		
Type	RO	RO	RO	RO	RO	RO	RO	RO	RO	R/W	RO	RO	R/W	RO	RO	RO
Reset	0	0	0	0	0	0	0	0	0	0	0	0	0	0	0	0

Bit/Field	Name	Type	Reset	Description
31:25	reserved	RO	0	Software should not rely on the value of a reserved bit. To provide compatibility with future products, the value of a reserved bit should be preserved across a read-modify-write operation.
24	CAN0	R/W	0	CAN0 Reset Control Reset control for CAN unit 0.
23:7	reserved	RO	0	Software should not rely on the value of a reserved bit. To provide compatibility with future products, the value of a reserved bit should be preserved across a read-modify-write operation.
6	HIB	R/W	0	HIB Reset Control Reset control for the Hibernation module.
5:4	reserved	RO	0	Software should not rely on the value of a reserved bit. To provide compatibility with future products, the value of a reserved bit should be preserved across a read-modify-write operation.
3	WDT	R/W	0	WDT Reset Control Reset control for Watchdog unit.
2:0	reserved	RO	0	Software should not rely on the value of a reserved bit. To provide compatibility with future products, the value of a reserved bit should be preserved across a read-modify-write operation.

Register 28: Software Reset Control 1 (SRCR1), offset 0x044

Writes to this register are masked by the bits in the **Device Capabilities 2 (DC2)** register.

Software Reset Control 1 (SRCR1)

Base 0x400F.E000
Offset 0x044
Type R/W, reset 0x00000000

	31	30	29	28	27	26	25	24	23	22	21	20	19	18	17	16
	reserved						COMP1	COMP0	reserved				TIMER3	TIMER2	TIMER1	TIMER0
Type	RO	RO	RO	RO	RO	RO	R/W	R/W	RO	RO	RO	RO	R/W	R/W	R/W	R/W
Reset	0	0	0	0	0	0	0	0	0	0	0	0	0	0	0	0

	15	14	13	12	11	10	9	8	7	6	5	4	3	2	1	0
	reserved	I2C1	reserved	I2C0	reserved						SSI1	SSI0	reserved	UART2	UART1	UART0
Type	RO	R/W	RO	R/W	RO	RO	RO	RO	RO	RO	R/W	R/W	RO	R/W	R/W	R/W
Reset	0	0	0	0	0	0	0	0	0	0	0	0	0	0	0	0

Bit/Field	Name	Type	Reset	Description
31:26	reserved	RO	0	Software should not rely on the value of a reserved bit. To provide compatibility with future products, the value of a reserved bit should be preserved across a read-modify-write operation.
25	COMP1	R/W	0	Analog Comp 1 Reset Control Reset control for analog comparator 1.
24	COMP0	R/W	0	Analog Comp 0 Reset Control Reset control for analog comparator 0.
23:20	reserved	RO	0	Software should not rely on the value of a reserved bit. To provide compatibility with future products, the value of a reserved bit should be preserved across a read-modify-write operation.
19	TIMER3	R/W	0	Timer 3 Reset Control Reset control for General-Purpose Timer module 3.
18	TIMER2	R/W	0	Timer 2 Reset Control Reset control for General-Purpose Timer module 2.
17	TIMER1	R/W	0	Timer 1 Reset Control Reset control for General-Purpose Timer module 1.
16	TIMER0	R/W	0	Timer 0 Reset Control Reset control for General-Purpose Timer module 0.
15	reserved	RO	0	Software should not rely on the value of a reserved bit. To provide compatibility with future products, the value of a reserved bit should be preserved across a read-modify-write operation.
14	I2C1	R/W	0	I2C1 Reset Control Reset control for I2C unit 1.
13	reserved	RO	0	Software should not rely on the value of a reserved bit. To provide compatibility with future products, the value of a reserved bit should be preserved across a read-modify-write operation.

Bit/Field	Name	Type	Reset	Description
12	I2C0	R/W	0	I2C0 Reset Control Reset control for I2C unit 0.
11:6	reserved	RO	0	Software should not rely on the value of a reserved bit. To provide compatibility with future products, the value of a reserved bit should be preserved across a read-modify-write operation.
5	SSI1	R/W	0	SSI1 Reset Control Reset control for SSI unit 1.
4	SSI0	R/W	0	SSI0 Reset Control Reset control for SSI unit 0.
3	reserved	RO	0	Software should not rely on the value of a reserved bit. To provide compatibility with future products, the value of a reserved bit should be preserved across a read-modify-write operation.
2	UART2	R/W	0	UART2 Reset Control Reset control for UART unit 2.
1	UART1	R/W	0	UART1 Reset Control Reset control for UART unit 1.
0	UART0	R/W	0	UART0 Reset Control Reset control for UART unit 0.

Register 29: Software Reset Control 2 (SRCR2), offset 0x048

Writes to this register are masked by the bits in the **Device Capabilities 4 (DC4)** register.

Software Reset Control 2 (SRCR2)

Base 0x400F.E000
Offset 0x048
Type R/W, reset 0x00000000

	31	30	29	28	27	26	25	24	23	22	21	20	19	18	17	16
	reserved															
Type	RO	RO	RO	RO	RO	RO	RO	RO	RO	RO	RO	RO	RO	RO	RO	RO
Reset	0	0	0	0	0	0	0	0	0	0	0	0	0	0	0	0

	15	14	13	12	11	10	9	8	7	6	5	4	3	2	1	0
	reserved								GPIOH	GPIOG	GPIOF	GPIOE	GPIOD	GPIOC	GPIOB	GPIOA
Type	RO	RO	RO	RO	RO	RO	RO	RO	R/W	R/W	R/W	R/W	R/W	R/W	R/W	R/W
Reset	0	0	0	0	0	0	0	0	0	0	0	0	0	0	0	0

Bit/Field	Name	Type	Reset	Description
31:8	reserved	RO	0	Software should not rely on the value of a reserved bit. To provide compatibility with future products, the value of a reserved bit should be preserved across a read-modify-write operation.
7	GPIOH	R/W	0	Port H Reset Control Reset control for GPIO Port H.
6	GPIOG	R/W	0	Port G Reset Control Reset control for GPIO Port G.
5	GPIOF	R/W	0	Port F Reset Control Reset control for GPIO Port F.
4	GPIOE	R/W	0	Port E Reset Control Reset control for GPIO Port E.
3	GPIOD	R/W	0	Port D Reset Control Reset control for GPIO Port D.
2	GPIOC	R/W	0	Port C Reset Control Reset control for GPIO Port C.
1	GPIOB	R/W	0	Port B Reset Control Reset control for GPIO Port B.
0	GPIOA	R/W	0	Port A Reset Control Reset control for GPIO Port A.

6 Hibernation Module

The Hibernation Module manages removal and restoration of power to provide a means for reducing power consumption. When the processor and peripherals are idle, power can be completely removed with only the Hibernation module remaining powered. Power can be restored based on an external signal, or at a certain time using the built-in Real-Time Clock (RTC). The Hibernation module can be independently supplied from a battery or an auxiliary power supply.

The Hibernation module has the following features:

- System power control using discrete external regulator
- Dedicated pin for waking from an external signal
- Low-battery detection, signaling, and interrupt generation
- 32-bit real-time clock (RTC)
- Two 32-bit RTC match registers for timed wake-up and interrupt generation
- Clock source from a 32.768-kHz external oscillator or a 4.194304-MHz crystal
- RTC predivider trim for making fine adjustments to the clock rate
- 64 32-bit words of non-volatile memory
- Programmable interrupts for RTC match, external wake, and low battery events

6.1 Block Diagram

Figure 6-1. Hibernation Module Block Diagram

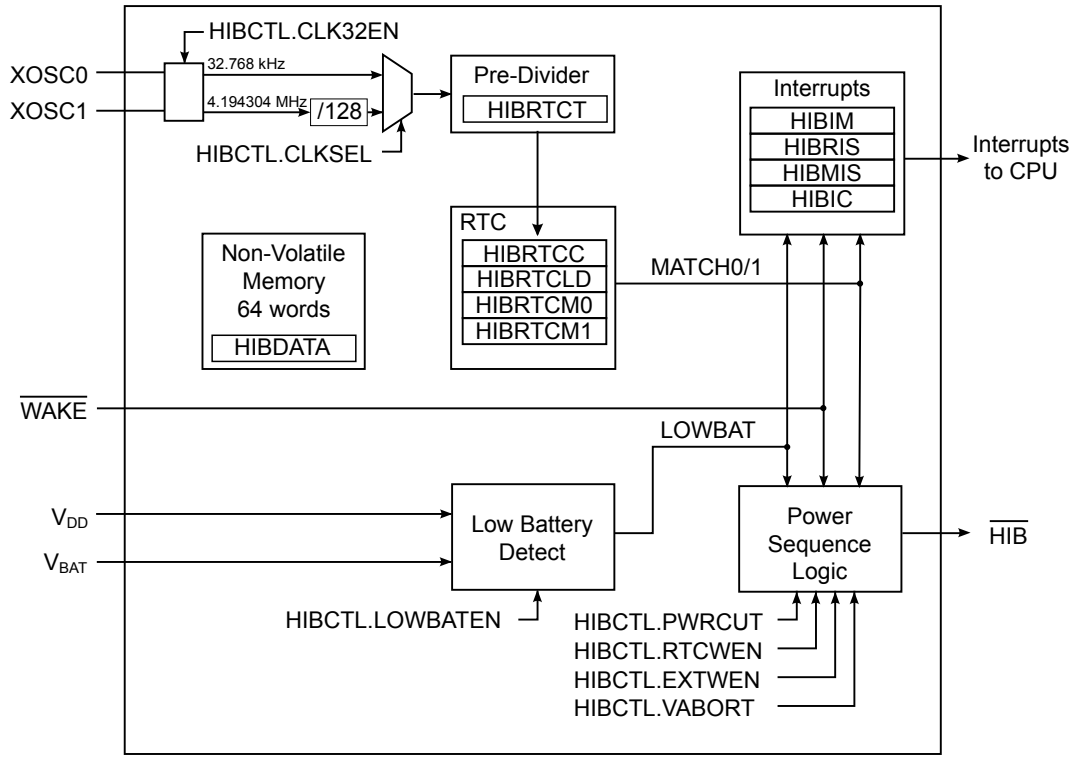

6.2 Signal Description

Table 6-1 on page 232 and Table 6-2 on page 233 list the external signals of the Hibernation module and describe the function of each. These signals have dedicated functions and are not alternate functions for any GPIO signals.

Table 6-1. Hibernate Signals (100LQFP)

Pin Name	Pin Number	Pin Type	Buffer Type[a]	Description
HIB	51	O	OD	An open-drain output with internal pull-up that indicates the processor is in Hibernate mode.
VBAT	55	-	Power	Power source for the Hibernation module. It is normally connected to the positive terminal of a battery and serves as the battery backup/Hibernation module power-source supply.
WAKE	50	I	TTL	An external input that brings the processor out of Hibernate mode when asserted.
XOSC0	52	I	Analog	Hibernation module oscillator crystal input or an external clock reference input. Note that this is either a crystal or a 32.768-kHz oscillator for the Hibernation module RTC.
XOSC1	53	O	Analog	Hibernation module oscillator crystal output. Leave unconnected when using a single-ended clock source.

a. The TTL designation indicates the pin has TTL-compatible voltage levels.

Table 6-2. Hibernate Signals (108BGA)

Pin Name	Pin Number	Pin Type	Buffer Type[a]	Description
$\overline{\text{HIB}}$	M12	O	OD	An open-drain output with internal pull-up that indicates the processor is in Hibernate mode.
VBAT	L12	-	Power	Power source for the Hibernation module. It is normally connected to the positive terminal of a battery and serves as the battery backup/Hibernation module power-source supply.
$\overline{\text{WAKE}}$	M10	I	TTL	An external input that brings the processor out of Hibernate mode when asserted.
XOSC0	K11	I	Analog	Hibernation module oscillator crystal input or an external clock reference input. Note that this is either a crystal or a 32.768-kHz oscillator for the Hibernation module RTC.
XOSC1	K12	O	Analog	Hibernation module oscillator crystal output. Leave unconnected when using a single-ended clock source.

a. The TTL designation indicates the pin has TTL-compatible voltage levels.

6.3 Functional Description

The Hibernation module controls the power to the processor with an enable signal ($\overline{\text{HIB}}$) that signals an external voltage regulator to turn off.

The Hibernation module power source is determined dynamically. The supply voltage of the Hibernation module is the larger of the main voltage source (V_{DD}) or the battery/auxilliary voltage source (V_{BAT}). A voting circuit indicates the larger and an internal power switch selects the appropriate voltage source. The Hibernation module also has a separate clock source to maintain a real-time clock (RTC). Once in hibernation, the module signals an external voltage regulator to turn back on the power when an external pin ($\overline{\text{WAKE}}$) is asserted, or when the internal RTC reaches a certain value. The Hibernation module can also detect when the battery voltage is low, and optionally prevent hibernation when this occurs.

When waking from hibernation, the $\overline{\text{HIB}}$ signal is deasserted. The return of V_{DD} causes a POR to be executed. The time from when the $\overline{\text{WAKE}}$ signal is asserted to when code begins execution is equal to the wake-up time ($t_{WAKE_TO_HIB}$) plus the power-on reset time (T_{IRPOR}).

6.3.1 Register Access Timing

Because the Hibernation module has an independent clocking domain, certain registers must be written only with a timing gap between accesses. The delay time is $t_{HIB_REG_WRITE}$, therefore software must guarantee that a delay of $t_{HIB_REG_WRITE}$ is inserted between back-to-back writes to certain Hibernation registers, or between a write followed by a read to those same registers. There is no restriction on timing for back-to-back reads from the Hibernation module. The following registers are subject to this timing restriction:

- **Hibernation RTC Counter (HIBRTCC)**
- **Hibernation RTC Match 0 (HIBRTCM0)**
- **Hibernation RTC Match 1 (HIBRTCM1)**
- **Hibernation RTC Load (HIBRTCLD)**
- **Hibernation RTC Trim (HIBRTCT)**
- **Hibernation Data (HIBDATA)**

6.3.2 Clock Source

The Hibernation module must be clocked by an external source, even if the RTC feature is not used. An external oscillator or crystal can be used for this purpose. To use a crystal, a 4.194304-MHz crystal is connected to the `XOSC0` and `XOSC1` pins. This clock signal is divided by 128 internally to produce the 32.768-kHz clock reference. For an alternate clock source, a 32.768-kHz oscillator can be connected to the `XOSC0` pin. See Figure 6-2 on page 234 and Figure 6-3 on page 235. Note that these diagrams only show the connection to the Hibernation pins and not to the full system. See "Hibernation Module" on page 602 for specific values.

The clock source is enabled by setting the `CLK32EN` bit of the **HIBCTL** register. The type of clock source is selected by setting the `CLKSEL` bit to 0 for a 4.194304-MHz clock source, and to 1 for a 32.768-kHz clock source. If the bit is set to 0, the 4.194304-MHz input clock is divided by 128, resulting in a 32.768-kHz clock source. If a crystal is used for the clock source, the software must leave a delay of t_{XOSC_SETTLE} after setting the `CLK32EN` bit and before any other accesses to the Hibernation module registers. The delay allows the crystal to power up and stabilize. If an oscillator is used for the clock source, no delay is needed.

Figure 6-2. Clock Source Using Crystal

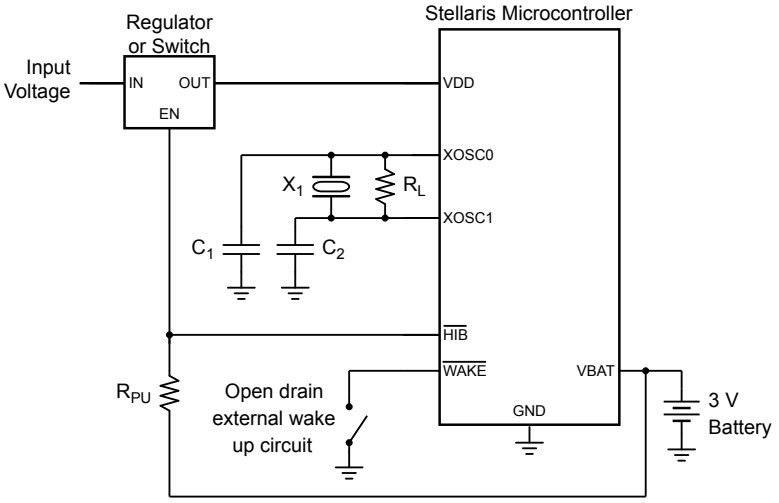

Note: X_1 = Crystal frequency is f_{XOSC_XTAL}.

$C_{1,2}$ = Capacitor value derived from crystal vendor load capacitance specifications.

R_L = Load resistor is R_{XOSC_LOAD}.

R_{PU} = Pull-up resistor (1 M½).

See "Hibernation Module" on page 602 for specific parameter values.

Figure 6-3. Clock Source Using Dedicated Oscillator

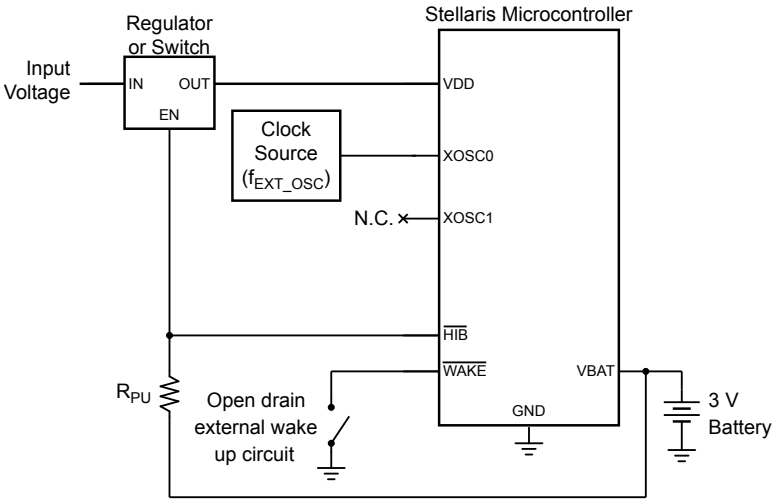

Note: R_{PU} = Pull-up resistor (1 M½).

6.3.3 Battery Management

The Hibernation module can be independently powered by a battery or an auxiliary power source. The module can monitor the voltage level of the battery and detect when the voltage drops below V_{LOWBAT}. When this happens, an interrupt can be generated. The module can also be configured so that it will not go into Hibernate mode if the battery voltage drops below this threshold. Battery voltage is not measured while in Hibernate mode.

Important: System level factors may affect the accuracy of the low battery detect circuit. The designer should consider battery type, discharge characteristics, and a test load during battery voltage measurements.

Note that the Hibernation module draws power from whichever source (V_{BAT} or V_{DD}) has the higher voltage. Therefore, it is important to design the circuit to ensure that V_{DD} is higher that V_{BAT} under nominal conditions or else the Hibernation module draws power from the battery even when V_{DD} is available.

The Hibernation module can be configured to detect a low battery condition by setting the `LOWBATEN` bit of the **HIBCTL** register. In this configuration, the `LOWBAT` bit of the **HIBRIS** register will be set when the battery level is low. If the `VABORT` bit is also set, then the module is prevented from entering Hibernation mode when a low battery is detected. The module can also be configured to generate an interrupt for the low-battery condition (see “Interrupts and Status” on page 237).

6.3.4 Real-Time Clock

The Hibernation module includes a 32-bit counter that increments once per second with a proper clock source and configuration (see “Clock Source” on page 234). The 32.768-kHz clock signal is fed into a predivider register which counts down the 32.768-kHz clock ticks to achieve a once per second clock rate for the RTC. The rate can be adjusted to compensate for inaccuracies in the clock source by using the predivider trim register, **HIBRTCT**. This register has a nominal value of 0x7FFF, and is used for one second out of every 64 seconds to divide the input clock. This allows the software to make fine corrections to the clock rate by adjusting the predivider trim register up or down from 0x7FFF. The predivider trim should be adjusted up from 0x7FFF in order to slow down the RTC rate, and down from 0x7FFF in order to speed up the RTC rate.

The Hibernation module includes two 32-bit match registers that are compared to the value of the RTC counter. The match registers can be used to wake the processor from hibernation mode, or to generate an interrupt to the processor if it is not in hibernation.

The RTC must be enabled with the RTCEN bit of the **HIBCTL** register. The value of the RTC can be set at any time by writing to the **HIBRTCLD** register. The predivider trim can be adjusted by reading and writing the **HIBRTCT** register. The predivider uses this register once every 64 seconds to adjust the clock rate. The two match registers can be set by writing to the **HIBRTCM0** and **HIBRTCM1** registers. The RTC can be configured to generate interrupts by using the interrupt registers (see "Interrupts and Status" on page 237). As long as the RTC is enabled and a valid V_{BAT} is present, the RTC continues counting, regardless of whether V_{DD} is present or if the part is in hibernation.

6.3.5 Battery-Backed Memory

The Hibernation module contains 64 32-bit words of memory which are retained during hibernation. This memory is powered from the battery or auxiliary power supply during hibernation. The processor software can save state information in this memory prior to hibernation, and can then recover the state upon waking. The battery-backed memory can be accessed through the **HIBDATA** registers.

6.3.6 Power Control

Important: The Hibernation Module requires special system implementation considerations when using $\overline{\text{HIB}}$ to control power, as it is intended to power-down all other sections of its host device. All system signals and power supplies that connect to the chip must be driven to 0 V_{DC} or powered down with the same regulator controlled by $\overline{\text{HIB}}$. See "Hibernation Module" on page 602 for more details.

The Hibernation module controls power to the microcontroller through the use of the $\overline{\text{HIB}}$ pin. This pin is intended to be connected to the enable signal of the external regulator(s) providing 3.3 V and/or 2.5 V to the microcontroller. When the $\overline{\text{HIB}}$ signal is asserted by the Hibernation module, the external regulator is turned off and no longer powers the system. The Hibernation module remains powered from the V_{BAT} supply (which could be a battery or an auxiliary power source) until a Wake event. Power to the device is restored by deasserting the $\overline{\text{HIB}}$ signal, which causes the external regulator to turn power back on to the chip.

6.3.7 Initiating Hibernate

Hibernation mode is initiated by the microcontroller setting the HIBREQ bit of the **HIBCTL** register. Prior to doing this, a wake-up condition must be configured, either from the external WAKE pin, or by using an RTC match.

The Hibernation module is configured to wake from the external $\overline{\text{WAKE}}$ pin by setting the PINWEN bit of the **HIBCTL** register. It is configured to wake from RTC match by setting the RTCWEN bit. Either one or both of these bits can be set prior to going into hibernation. The $\overline{\text{WAKE}}$ pin includes a weak internal pull-up. Note that both the HIB and $\overline{\text{WAKE}}$ pins use the Hibernation module's internal power supply as the logic 1 reference.

When the Hibernation module wakes, the microcontroller will see a normal power-on reset. Software can detect that the power-on was due to a wake from hibernation by examining the raw interrupt status register (see "Interrupts and Status" on page 237) and by looking for state data in the battery-backed memory (see "Battery-Backed Memory" on page 236).

When the $\overline{\text{HIB}}$ signal deasserts, enabling the external regulator, the external regulator must reach the operating voltage within $t_{HIB_TO_VDD}$.

6.3.8 Interrupts and Status

The Hibernation module can generate interrupts when the following conditions occur:

- Assertion of $\overline{\text{WAKE}}$ pin
- RTC match
- Low battery detected

All of the interrupts are ORed together before being sent to the interrupt controller, so the Hibernate module can only generate a single interrupt request to the controller at any given time. The software interrupt handler can service multiple interrupt events by reading the **HIBMIS** register. Software can also read the status of the Hibernation module at any time by reading the **HIBRIS** register which shows all of the pending events. This register can be used at power-on to see if a wake condition is pending, which indicates to the software that a hibernation wake occurred.

The events that can trigger an interrupt are configured by setting the appropriate bits in the **HIBIM** register. Pending interrupts can be cleared by writing the corresponding bit in the **HIBIC** register.

6.4 Initialization and Configuration

The Hibernation module can be set in several different configurations. The following sections show the recommended programming sequence for various scenarios. The examples below assume that a 32.768-kHz oscillator is used, and thus always show bit 2 (`CLKSEL`) of the **HIBCTL** register set to 1. If a 4.194304-MHz crystal is used instead, then the `CLKSEL` bit remains cleared. Because the Hibernation module runs at 32.768 kHz and is asynchronous to the rest of the system, software must allow a delay of $t_{HIB_REG_WRITE}$ after writes to certain registers (see “Register Access Timing” on page 233). The registers that require a delay are listed in a note in “Register Map” on page 238 as well as in each register description.

6.4.1 Initialization

The Hibernation module clock source must be enabled first, even if the RTC feature is not used. If a 4.194304-MHz crystal is used, perform the following steps:

1. Write 0x40 to the **HIBCTL** register at offset 0x10 to enable the crystal and select the divide-by-128 input path.
2. Wait for a time of t_{XOSC_SETTLE} for the crystal to power up and stabilize before performing any other operations with the Hibernation module.

If a 32.678-kHz oscillator is used, then perform the following steps:

1. Write 0x44 to the **HIBCTL** register at offset 0x10 to enable the oscillator input.
2. No delay is necessary.

The above is only necessary when the entire system is initialized for the first time. If the processor is powered due to a wake from hibernation, then the Hibernation module has already been powered up and the above steps are not necessary. The software can detect that the Hibernation module and clock are already powered by examining the `CLK32EN` bit of the **HIBCTL** register.

6.4.2 RTC Match Functionality (No Hibernation)

Use the following steps to implement the RTC match functionality of the Hibernation module:

1. Write the required RTC match value to one of the **HIBRTCMn** registers at offset 0x004 or 0x008.
2. Write the required RTC load value to the **HIBRTCLD** register at offset 0x00C.
3. Set the required RTC match interrupt mask in the `RTCALT0` and `RTCALT1` bits (bits 1:0) in the **HIBIM** register at offset 0x014.
4. Write 0x0000.0041 to the **HIBCTL** register at offset 0x010 to enable the RTC to begin counting.

6.4.3 RTC Match/Wake-Up from Hibernation

Use the following steps to implement the RTC match and wake-up functionality of the Hibernation module:

1. Write the required RTC match value to the **HIBRTCMn** registers at offset 0x004 or 0x008.
2. Write the required RTC load value to the **HIBRTCLD** register at offset 0x00C.
3. Write any data to be retained during power cut to the **HIBDATA** register at offsets 0x030-0x12C.
4. Set the RTC Match Wake-Up and start the hibernation sequence by writing 0x0000.004F to the **HIBCTL** register at offset 0x010.

6.4.4 External Wake-Up from Hibernation

Use the following steps to implement the Hibernation module with the external `WAKE` pin as the wake-up source for the microcontroller:

1. Write any data to be retained during power cut to the **HIBDATA** register at offsets 0x030-0x12C.
2. Enable the external wake and start the hibernation sequence by writing 0x0000.0056 to the **HIBCTL** register at offset 0x010.

6.4.5 RTC/External Wake-Up from Hibernation

1. Write the required RTC match value to the **HIBRTCMn** registers at offset 0x004 or 0x008.
2. Write the required RTC load value to the **HIBRTCLD** register at offset 0x00C.
3. Write any data to be retained during power cut to the **HIBDATA** register at offsets 0x030-0x12C.
4. Set the RTC Match/External Wake-Up and start the hibernation sequence by writing 0x0000.005F to the **HIBCTL** register at offset 0x010.

6.5 Register Map

Table 6-3 on page 239 lists the Hibernation registers. All addresses given are relative to the Hibernation Module base address at 0x400F.C000. Note that the Hibernation module clock must be enabled before the registers can be programmed (see page 206). There must be a delay of 3 system clocks after the Hibernation module clock is enabled before any Hibernation module registers are accessed.

Important: The Hibernation module registers are reset under two conditions:

1. A system reset when the `RTCEN` and the `PINWEN` bits in the **HIBCTL** register are both cleared.

2. A cold POR, when both the V_{DD} and V_{BAT} supplies are removed.

Any other reset condition is ignored by the Hibernation module.

Table 6-3. Hibernation Module Register Map

Offset	Name	Type	Reset	Description	See page
0x000	HIBRTCC	RO	0x0000.0000	Hibernation RTC Counter	240
0x004	HIBRTCM0	R/W	0xFFFF.FFFF	Hibernation RTC Match 0	241
0x008	HIBRTCM1	R/W	0xFFFF.FFFF	Hibernation RTC Match 1	242
0x00C	HIBRTCLD	R/W	0xFFFF.FFFF	Hibernation RTC Load	243
0x010	HIBCTL	R/W	0x8000.0000	Hibernation Control	244
0x014	HIBIM	R/W	0x0000.0000	Hibernation Interrupt Mask	246
0x018	HIBRIS	RO	0x0000.0000	Hibernation Raw Interrupt Status	247
0x01C	HIBMIS	RO	0x0000.0000	Hibernation Masked Interrupt Status	248
0x020	HIBIC	R/W1C	0x0000.0000	Hibernation Interrupt Clear	249
0x024	HIBRTCT	R/W	0x0000.7FFF	Hibernation RTC Trim	250
0x030-0x12C	HIBDATA	R/W	-	Hibernation Data	251

6.6 Register Descriptions

The remainder of this section lists and describes the Hibernation module registers, in numerical order by address offset.

Register 1: Hibernation RTC Counter (HIBRTCC), offset 0x000

This register is the current 32-bit value of the RTC counter.

Hibernation RTC Counter (HIBRTCC)

Base 0x400F.C000
Offset 0x000
Type RO, reset 0x0000.0000

	31	30	29	28	27	26	25	24	23	22	21	20	19	18	17	16
	RTCC															
Type	RO	RO	RO	RO	RO	RO	RO	RO	RO	RO	RO	RO	RO	RO	RO	RO
Reset	0	0	0	0	0	0	0	0	0	0	0	0	0	0	0	0

	15	14	13	12	11	10	9	8	7	6	5	4	3	2	1	0
	RTCC															
Type	RO	RO	RO	RO	RO	RO	RO	RO	RO	RO	RO	RO	RO	RO	RO	RO
Reset	0	0	0	0	0	0	0	0	0	0	0	0	0	0	0	0

Bit/Field	Name	Type	Reset	Description
31:0	RTCC	RO	0x0000.0000	RTC Counter A read returns the 32-bit counter value. This register is read-only. To change the value, use the **HIBRTCLD** register.

Register 2: Hibernation RTC Match 0 (HIBRTCM0), offset 0x004

This register is the 32-bit match 0 register for the RTC counter.

Hibernation RTC Match 0 (HIBRTCM0)

Base 0x400F.C000
Offset 0x004
Type R/W, reset 0xFFFF.FFFF

	31	30	29	28	27	26	25	24	23	22	21	20	19	18	17	16
	RTCM0															
Type	R/W	R/W	R/W	R/W	R/W	R/W	R/W	R/W	R/W	R/W	R/W	R/W	R/W	R/W	R/W	R/W
Reset	1	1	1	1	1	1	1	1	1	1	1	1	1	1	1	1

	15	14	13	12	11	10	9	8	7	6	5	4	3	2	1	0
	RTCM0															
Type	R/W	R/W	R/W	R/W	R/W	R/W	R/W	R/W	R/W	R/W	R/W	R/W	R/W	R/W	R/W	R/W
Reset	1	1	1	1	1	1	1	1	1	1	1	1	1	1	1	1

Bit/Field	Name	Type	Reset	Description
31:0	RTCM0	R/W	0xFFFF.FFFF	RTC Match 0 A write loads the value into the RTC match register. A read returns the current match value.

Register 3: Hibernation RTC Match 1 (HIBRTCM1), offset 0x008

This register is the 32-bit match 1 register for the RTC counter.

Hibernation RTC Match 1 (HIBRTCM1)

Base 0x400F.C000
Offset 0x008
Type R/W, reset 0xFFFF.FFFF

	31	30	29	28	27	26	25	24	23	22	21	20	19	18	17	16
	RTCM1															
Type	R/W	R/W	R/W	R/W	R/W	R/W	R/W	R/W	R/W	R/W	R/W	R/W	R/W	R/W	R/W	R/W
Reset	1	1	1	1	1	1	1	1	1	1	1	1	1	1	1	1

	15	14	13	12	11	10	9	8	7	6	5	4	3	2	1	0
	RTCM1															
Type	R/W	R/W	R/W	R/W	R/W	R/W	R/W	R/W	R/W	R/W	R/W	R/W	R/W	R/W	R/W	R/W
Reset	1	1	1	1	1	1	1	1	1	1	1	1	1	1	1	1

Bit/Field	Name	Type	Reset	Description
31:0	RTCM1	R/W	0xFFFF.FFFF	RTC Match 1 A write loads the value into the RTC match register. A read returns the current match value.

Register 4: Hibernation RTC Load (HIBRTCLD), offset 0x00C

This register is the 32-bit value loaded into the RTC counter.

Hibernation RTC Load (HIBRTCLD)

Base 0x400F.C000
Offset 0x00C
Type R/W, reset 0xFFFF.FFFF

	31	30	29	28	27	26	25	24	23	22	21	20	19	18	17	16
	RTCLD															
Type	R/W	R/W	R/W	R/W	R/W	R/W	R/W	R/W	R/W	R/W	R/W	R/W	R/W	R/W	R/W	R/W
Reset	1	1	1	1	1	1	1	1	1	1	1	1	1	1	1	1

	15	14	13	12	11	10	9	8	7	6	5	4	3	2	1	0
	RTCLD															
Type	R/W	R/W	R/W	R/W	R/W	R/W	R/W	R/W	R/W	R/W	R/W	R/W	R/W	R/W	R/W	R/W
Reset	1	1	1	1	1	1	1	1	1	1	1	1	1	1	1	1

Bit/Field	Name	Type	Reset	Description
31:0	RTCLD	R/W	0xFFFF.FFFF	RTC Load A write loads the current value into the RTC counter (RTCC). A read returns the 32-bit load value.

Register 5: Hibernation Control (HIBCTL), offset 0x010

This register is the control register for the Hibernation module.

Hibernation Control (HIBCTL)

Base 0x400F.C000
Offset 0x010
Type R/W, reset 0x8000.0000

	31	30	29	28	27	26	25	24	23	22	21	20	19	18	17	16
	reserved															
Type	RO	RO	RO	RO	RO	RO	RO	RO	RO	RO	RO	RO	RO	RO	RO	RO
Reset	0	0	0	0	0	0	0	0	0	0	0	0	0	0	0	0

	15	14	13	12	11	10	9	8	7	6	5	4	3	2	1	0
	reserved								VABORT	CLK32EN	LOWBATEN	PINWEN	RTCWEN	CLKSEL	HIBREQ	RTCEN
Type	RO	RO	RO	RO	RO	RO	RO	RO	R/W	R/W	R/W	R/W	R/W	R/W	R/W	R/W
Reset	0	0	0	0	0	0	0	0	0	0	0	0	0	0	0	0

Bit/Field	Name	Type	Reset	Description
31:8	reserved	RO	0x00	Software should not rely on the value of a reserved bit. To provide compatibility with future products, the value of a reserved bit should be preserved across a read-modify-write operation.
7	VABORT	R/W	0	Power Cut Abort Enable Value — Description 0 — Power cut occurs during a low-battery alert. 1 — Power cut is aborted.
6	CLK32EN	R/W	0	Clocking Enable Value — Description 0 — Disabled 1 — Enabled This bit must be enabled to use the Hibernation module. If a crystal is used, then software should wait 20 ms after setting this bit to allow the crystal to power up and stabilize.
5	LOWBATEN	R/W	0	Low Battery Monitoring Enable Value — Description 0 — Disabled 1 — Enabled When set, low battery voltage detection is enabled ($V_{BAT} < V_{LOWBAT}$).
4	PINWEN	R/W	0	External $\overline{\text{WAKE}}$ Pin Enable Value — Description 0 — Disabled 1 — Enabled When set, an external event on the $\overline{\text{WAKE}}$ pin will re-power the device.

Bit/Field	Name	Type	Reset	Description
3	RTCWEN	R/W	0	RTC Wake-up Enable Value — Description 0 — Disabled 1 — Enabled When set, an RTC match event (`RTCM0` or `RTCM1`) will re-power the device based on the RTC counter value matching the corresponding match register 0 or 1.
2	CLKSEL	R/W	0	Hibernation Module Clock Select Value — Description 0 — Use Divide by 128 output. Use this value for a 4.194304-MHz crystal. 1 — Use raw output. Use this value for a 32.768-kHz oscillator.
1	HIBREQ	R/W	0	Hibernation Request Value — Description 0 — Disabled 1 — Hibernation initiated After a wake-up event, this bit is cleared by hardware.
0	RTCEN	R/W	0	RTC Timer Enable Value — Description 0 — Disabled 1 — Enabled

Register 6: Hibernation Interrupt Mask (HIBIM), offset 0x014

This register is the interrupt mask register for the Hibernation module interrupt sources.

Hibernation Interrupt Mask (HIBIM)

Base 0x400F.C000
Offset 0x014
Type R/W, reset 0x0000.0000

	31	30	29	28	27	26	25	24	23	22	21	20	19	18	17	16
	reserved															
Type	RO	RO	RO	RO	RO	RO	RO	RO	RO	RO	RO	RO	RO	RO	RO	RO
Reset	0	0	0	0	0	0	0	0	0	0	0	0	0	0	0	0

	15	14	13	12	11	10	9	8	7	6	5	4	3	2	1	0
	reserved												EXTW	LOWBAT	RTCALT1	RTCALT0
Type	RO	RO	RO	RO	RO	RO	RO	RO	RO	RO	RO	RO	R/W	R/W	R/W	R/W
Reset	0	0	0	0	0	0	0	0	0	0	0	0	0	0	0	0

Bit/Field	Name	Type	Reset	Description
31:4	reserved	RO	0x000.0000	Software should not rely on the value of a reserved bit. To provide compatibility with future products, the value of a reserved bit should be preserved across a read-modify-write operation.
3	EXTW	R/W	0	External Wake-Up Interrupt Mask Value — Description 0 — Masked 1 — Unmasked
2	LOWBAT	R/W	0	Low Battery Voltage Interrupt Mask Value — Description 0 — Masked 1 — Unmasked
1	RTCALT1	R/W	0	RTC Alert1 Interrupt Mask Value — Description 0 — Masked 1 — Unmasked
0	RTCALT0	R/W	0	RTC Alert0 Interrupt Mask Value — Description 0 — Masked 1 — Unmasked

Register 7: Hibernation Raw Interrupt Status (HIBRIS), offset 0x018

This register is the raw interrupt status for the Hibernation module interrupt sources.

Hibernation Raw Interrupt Status (HIBRIS)

Base 0x400F.C000
Offset 0x018
Type RO, reset 0x0000.0000

	31	30	29	28	27	26	25	24	23	22	21	20	19	18	17	16
	reserved															
Type	RO	RO	RO	RO	RO	RO	RO	RO	RO	RO	RO	RO	RO	RO	RO	RO
Reset	0	0	0	0	0	0	0	0	0	0	0	0	0	0	0	0

	15	14	13	12	11	10	9	8	7	6	5	4	3	2	1	0
	reserved												EXTW	LOWBAT	RTCALT1	RTCALT0
Type	RO	RO	RO	RO	RO	RO	RO	RO	RO	RO	RO	RO	RO	RO	RO	RO
Reset	0	0	0	0	0	0	0	0	0	0	0	0	0	0	0	0

Bit/Field	Name	Type	Reset	Description
31:4	reserved	RO	0x000.0000	Software should not rely on the value of a reserved bit. To provide compatibility with future products, the value of a reserved bit should be preserved across a read-modify-write operation.
3	EXTW	RO	0	External Wake-Up Raw Interrupt Status
2	LOWBAT	RO	0	Low Battery Voltage Raw Interrupt Status
1	RTCALT1	RO	0	RTC Alert1 Raw Interrupt Status
0	RTCALT0	RO	0	RTC Alert0 Raw Interrupt Status

Register 8: Hibernation Masked Interrupt Status (HIBMIS), offset 0x01C

This register is the masked interrupt status for the Hibernation module interrupt sources.

Hibernation Masked Interrupt Status (HIBMIS)

Base 0x400F.C000
Offset 0x01C
Type RO, reset 0x0000.0000

	31	30	29	28	27	26	25	24	23	22	21	20	19	18	17	16
	reserved															
Type	RO	RO	RO	RO	RO	RO	RO	RO	RO	RO	RO	RO	RO	RO	RO	RO
Reset	0	0	0	0	0	0	0	0	0	0	0	0	0	0	0	0

	15	14	13	12	11	10	9	8	7	6	5	4	3	2	1	0
	reserved												EXTW	LOWBAT	RTCALT1	RTCALT0
Type	RO	RO	RO	RO	RO	RO	RO	RO	RO	RO	RO	RO	RO	RO	RO	RO
Reset	0	0	0	0	0	0	0	0	0	0	0	0	0	0	0	0

Bit/Field	Name	Type	Reset	Description
31:4	reserved	RO	0x000.0000	Software should not rely on the value of a reserved bit. To provide compatibility with future products, the value of a reserved bit should be preserved across a read-modify-write operation.
3	EXTW	RO	0	External Wake-Up Masked Interrupt Status
2	LOWBAT	RO	0	Low Battery Voltage Masked Interrupt Status
1	RTCALT1	RO	0	RTC Alert1 Masked Interrupt Status
0	RTCALT0	RO	0	RTC Alert0 Masked Interrupt Status

Register 9: Hibernation Interrupt Clear (HIBIC), offset 0x020

This register is the interrupt write-one-to-clear register for the Hibernation module interrupt sources.

Hibernation Interrupt Clear (HIBIC)

Base 0x400F.C000
Offset 0x020
Type R/W1C, reset 0x0000.0000

	31	30	29	28	27	26	25	24	23	22	21	20	19	18	17	16
	reserved															
Type	RO	RO	RO	RO	RO	RO	RO	RO	RO	RO	RO	RO	RO	RO	RO	RO
Reset	0	0	0	0	0	0	0	0	0	0	0	0	0	0	0	0

	15	14	13	12	11	10	9	8	7	6	5	4	3	2	1	0
	reserved												EXTW	LOWBAT	RTCALT1	RTCALT0
Type	RO	RO	RO	RO	RO	RO	RO	RO	RO	RO	RO	RO	R/W1C	R/W1C	R/W1C	R/W1C
Reset	0	0	0	0	0	0	0	0	0	0	0	0	0	0	0	0

Bit/Field	Name	Type	Reset	Description
31:4	reserved	RO	0x000.0000	Software should not rely on the value of a reserved bit. To provide compatibility with future products, the value of a reserved bit should be preserved across a read-modify-write operation.
3	EXTW	R/W1C	0	External Wake-Up Masked Interrupt Clear Reads return an indeterminate value.
2	LOWBAT	R/W1C	0	Low Battery Voltage Masked Interrupt Clear Reads return an indeterminate value.
1	RTCALT1	R/W1C	0	RTC Alert1 Masked Interrupt Clear Reads return an indeterminate value.
0	RTCALT0	R/W1C	0	RTC Alert0 Masked Interrupt Clear Reads return an indeterminate value.

Register 10: Hibernation RTC Trim (HIBRTCT), offset 0x024

This register contains the value that is used to trim the RTC clock predivider. It represents the computed underflow value that is used during the trim cycle. It is represented as 0x7FFF ± N clock cycles.

Hibernation RTC Trim (HIBRTCT)

Base 0x400F.C000
Offset 0x024
Type R/W, reset 0x0000.7FFF

	31	30	29	28	27	26	25	24	23	22	21	20	19	18	17	16
	reserved															
Type	RO	RO	RO	RO	RO	RO	RO	RO	RO	RO	RO	RO	RO	RO	RO	RO
Reset	0	0	0	0	0	0	0	0	0	0	0	0	0	0	0	0

	15	14	13	12	11	10	9	8	7	6	5	4	3	2	1	0
	TRIM															
Type	R/W	R/W	R/W	R/W	R/W	R/W	R/W	R/W	R/W	R/W	R/W	R/W	R/W	R/W	R/W	R/W
Reset	0	1	1	1	1	1	1	1	1	1	1	1	1	1	1	1

Bit/Field	Name	Type	Reset	Description
31:16	reserved	RO	0x0000	Software should not rely on the value of a reserved bit. To provide compatibility with future products, the value of a reserved bit should be preserved across a read-modify-write operation.
15:0	TRIM	R/W	0x7FFF	RTC Trim Value This value is loaded into the RTC predivider every 64 seconds. It is used to adjust the RTC rate to account for drift and inaccuracy in the clock source. The compensation is made by software by adjusting the default value of 0x7FFF up or down.

Register 11: Hibernation Data (HIBDATA), offset 0x030-0x12C

This address space is implemented as a 64x32-bit memory (256 bytes). It can be loaded by the system processor in order to store state information and does not lose power during a power-cut operation as long as a battery is present.

Hibernation Data (HIBDATA)

Base 0x400F.C000
Offset 0x030-0x12C
Type R/W, reset -

	31	30	29	28	27	26	25	24	23	22	21	20	19	18	17	16
	RTD															
Type	R/W	R/W	R/W	R/W	R/W	R/W	R/W	R/W	R/W	R/W	R/W	R/W	R/W	R/W	R/W	R/W
Reset	-	-	-	-	-	-	-	-	-	-	-	-	-	-	-	-

	15	14	13	12	11	10	9	8	7	6	5	4	3	2	1	0
	RTD															
Type	R/W	R/W	R/W	R/W	R/W	R/W	R/W	R/W	R/W	R/W	R/W	R/W	R/W	R/W	R/W	R/W
Reset	-	-	-	-	-	-	-	-	-	-	-	-	-	-	-	-

Bit/Field	Name	Type	Reset	Description
31:0	RTD	R/W	-	Hibernation Module NV Registers[63:0]

7 Internal Memory

The LM3S2911 microcontroller comes with 64 KB of bit-banded SRAM and 256 KB of flash memory. The flash controller provides a user-friendly interface, making flash programming a simple task. Flash protection can be applied to the flash memory on a 2-KB block basis.

7.1 Block Diagram

Figure 7-1 on page 252 illustrates the Flash functions. The dashed boxes in the figure indicate registers residing in the System Control module rather than the Flash Control module.

Figure 7-1. Flash Block Diagram

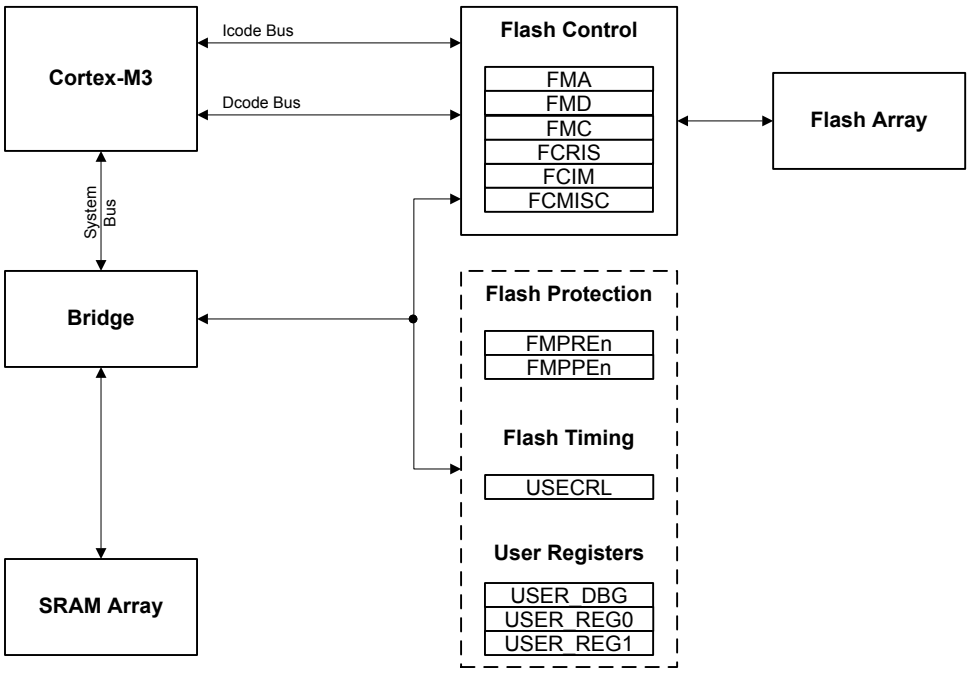

7.2 Functional Description

This section describes the functionality of the SRAM and Flash memories.

7.2.1 SRAM Memory

The internal SRAM of the Stellaris® devices is located at address 0x2000.0000 of the device memory map. To reduce the number of time consuming read-modify-write (RMW) operations, ARM has introduced *bit-banding* technology in the Cortex-M3 processor. With a bit-band-enabled processor, certain regions in the memory map (SRAM and peripheral space) can use address aliases to access individual bits in a single, atomic operation.

The bit-band alias is calculated by using the formula:

```
bit-band alias = bit-band base + (byte offset * 32) + (bit number * 4)
```

For example, if bit 3 at address 0x2000.1000 is to be modified, the bit-band alias is calculated as:

```
0x2200.0000 + (0x1000 * 32) + (3 * 4) = 0x2202.000C
```

With the alias address calculated, an instruction performing a read/write to address 0x2202.000C allows direct access to only bit 3 of the byte at address 0x2000.1000.

For details about bit-banding, see “Bit-Banding” on page 69.

7.2.2 Flash Memory

The flash is organized as a set of 1-KB blocks that can be individually erased. Erasing a block causes the entire contents of the block to be reset to all 1s. An individual 32-bit word can be programmed to change bits that are currently 1 to a 0. These blocks are paired into a set of 2-KB blocks that can be individually protected. The protection allows blocks to be marked as read-only or execute-only, providing different levels of code protection. Read-only blocks cannot be erased or programmed, protecting the contents of those blocks from being modified. Execute-only blocks cannot be erased or programmed, and can only be read by the controller instruction fetch mechanism, protecting the contents of those blocks from being read by either the controller or by a debugger.

See also “Serial Flash Loader” on page 607 for a preprogrammed flash-resident utility used to download code to the flash memory of a device without the use of a debug interface.

7.2.2.1 Flash Memory Timing

The timing for the flash is automatically handled by the flash controller. However, in order to do so, it must know the clock rate of the system in order to time its internal signals properly. The number of clock cycles per microsecond must be provided to the flash controller for it to accomplish this timing. It is software's responsibility to keep the flash controller updated with this information via the **USec Reload (USECRL)** register.

On reset, the **USECRL** register is loaded with a value that configures the flash timing so that it works with the maximum clock rate of the part. If software changes the system operating frequency, the new operating frequency minus 1 (in MHz) must be loaded into **USECRL** before any flash modifications are attempted. For example, if the device is operating at a speed of 20 MHz, a value of 0x13 (20-1) must be written to the **USECRL** register.

7.2.2.2 Flash Memory Protection

The user is provided two forms of flash protection per 2-KB flash blocks in four pairs of 32-bit wide registers. The protection policy for each form is controlled by individual bits (per policy per block) in the **FMPPEn** and **FMPREn** registers.

- **Flash Memory Protection Program Enable (FMPPEn)**: If set, the block may be programmed (written) or erased. If cleared, the block may not be changed.
- **Flash Memory Protection Read Enable (FMPREn)**: If a bit is set, the corresponding block may be executed or read by software or debuggers. If a bit is cleared, the corresponding block may only be executed, and contents of the memory block are prohibited from being read as data.

The policies may be combined as shown in Table 7-1 on page 253.

Table 7-1. Flash Protection Policy Combinations

FMPPEn	FMPREn	Protection
0	0	Execute-only protection. The block may only be executed and may not be written or erased. This mode is used to protect code.

Table 7-1. Flash Protection Policy Combinations *(continued)*

FMPPEn	FMPREn	Protection
1	0	The block may be written, erased or executed, but not read. This combination is unlikely to be used.
0	1	Read-only protection. The block may be read or executed but may not be written or erased. This mode is used to lock the block from further modification while allowing any read or execute access.
1	1	No protection. The block may be written, erased, executed or read.

A Flash memory access that attempts to read a read-protected block (**FMPREn** bit is set) is prohibited and generates a bus fault. A Flash memory access that attempts to program or erase a program-protected block (**FMPPEn** bit is set) is prohibited and can optionally generate an interrupt (by setting the AMASK bit in the **Flash Controller Interrupt Mask (FCIM)** register) to alert software developers of poorly behaving software during the development and debug phases.

The factory settings for the **FMPREn** and **FMPPEn** registers are a value of 1 for all implemented banks. These settings create a policy of open access and programmability. The register bits may be changed by clearing the specific register bit. The changes are not permanent until the register is committed (saved), at which point the bit change is permanent. If a bit is changed from a 1 to a 0 and not committed, it may be restored by executing a power-on reset sequence. The changes are committed using the **Flash Memory Control (FMC)** register. Details on programming these bits are discussed in “Nonvolatile Register Programming” on page 255.

7.2.2.3 Interrupts

The Flash memory controller can generate interrupts when the following conditions are observed:

- Programming Interrupt - signals when a program or erase action is complete.
- Access Interrupt - signals when a program or erase action has been attempted on a 2-kB block of memory that is protected by its corresponding **FMPPEn** bit.

The interrupt events that can trigger a controller-level interrupt are defined in the **Flash Controller Masked Interrupt Status (FCMIS)** register (see page 263) by setting the corresponding MASK bits. If interrupts are not used, the raw interrupt status is always visible via the **Flash Controller Raw Interrupt Status (FCRIS)** register (see page 262).

Interrupts are always cleared (for both the **FCMIS** and **FCRIS** registers) by writing a 1 to the corresponding bit in the **Flash Controller Masked Interrupt Status and Clear (FCMISC)** register (see page 264).

7.3 Flash Memory Initialization and Configuration

7.3.1 Flash Programming

The Stellaris devices provide a user-friendly interface for flash programming. All erase/program operations are handled via three registers: **FMA**, **FMD**, and **FMC**.

During a Flash memory operation (write, page erase, or mass erase) access to the Flash memory is inhibited. As a result, instruction and literal fetches are held off until the Flash memory operation is complete. If instruction execution is required during a Flash memory operation, the code that is executing must be placed in SRAM and executed from there while the flash operation is in progress.

7.3.1.1 To program a 32-bit word

1. Write source data to the **FMD** register.
2. Write the target address to the **FMA** register.
3. Write the flash write key and the `WRITE` bit (a value of 0xA442.0001) to the **FMC** register.
4. Poll the **FMC** register until the `WRITE` bit is cleared.

7.3.1.2 To perform an erase of a 1-KB page

1. Write the page address to the **FMA** register.
2. Write the flash write key and the `ERASE` bit (a value of 0xA442.0002) to the **FMC** register.
3. Poll the **FMC** register until the `ERASE` bit is cleared.

7.3.1.3 To perform a mass erase of the flash

1. Write the flash write key and the `MERASE` bit (a value of 0xA442.0004) to the **FMC** register.
2. Poll the **FMC** register until the `MERASE` bit is cleared.

7.3.2 Nonvolatile Register Programming

This section discusses how to update registers that are resident within the Flash memory itself. These registers exist in a separate space from the main Flash memory array and are not affected by an ERASE or MASS ERASE operation. The bits in these registers can be changed from 1 to 0 with a write operation. Prior to being committed, the register contents are unaffected by any reset condition except power-on reset, which returns the register contents to the original value. By committing the register values using the `COMT` bit in the **FMC** register, the register contents become nonvolatile and are therefore retained following power cycling. Once the register contents are committed, the contents are permanent, and they cannot be restored to their factory default values.

With the exception of the **USER_DBG** register, the settings in these registers can be tested before committing them to Flash memory. For the **USER_DBG** register, the data to be written is loaded into the **FMD** register before it is committed. The **FMD** register is read only and does not allow the **USER_DBG** operation to be tried before committing it to nonvolatile memory.

Important: The Flash memory registers can only have bits changed from 1 to 0 by user programming and can only be committed once. After being committed, these registers cannot be restored to their factory default values.

In addition, the **USER_REG0**, **USER_REG1**, **USER_REG2**, **USER_REG3**, and **USER_DBG** registers each use bit 31 (`NW`) to indicate that they have not been committed and bits in the register may be changed from 1 to 0. These five registers can only be committed once whereas the Flash memory protection registers may be committed multiple times. Table 7-2 on page 256 provides the **FMA** address required for commitment of each of the registers and the source of the data to be written when the **FMC** register is written with a value of 0xA442.0008. After writing the `COMT` bit, the user may poll the **FMC** register to wait for the commit operation to complete.

Table 7-2. User-Programmable Flash Memory Resident Registers

Register to be Committed	FMA Value	Data Source
FMPRE0	0x0000.0000	FMPRE0
FMPRE1	0x0000.0002	FMPRE1
FMPRE2	0x0000.0004	FMPRE2
FMPRE3	0x0000.0006	FMPRE3
FMPPE0	0x0000.0001	FMPPE0
FMPPE1	0x0000.0003	FMPPE1
FMPPE2	0x0000.0005	FMPPE2
FMPPE3	0x0000.0007	FMPPE3
USER_REG0	0x8000.0000	USER_REG0
USER_REG1	0x8000.0001	USER_REG1
USER_REG2	0x8000.0002	USER_REG2
USER_REG3	0x8000.0003	USER_REG3
USER_DBG	0x7510.0000	FMD

7.4 Register Map

Table 7-3 on page 256 lists the Flash memory and control registers. The offset listed is a hexadecimal increment to the register's address. The **FMA**, **FMD**, **FMC**, **FCRIS**, **FCIM**, and **FCMISC** register offsets are relative to the Flash memory control base address of 0x400F.D000. The Flash memory protection register offsets are relative to the System Control base address of 0x400F.E000.

Table 7-3. Flash Register Map

Offset	Name	Type	Reset	Description	See page
Flash Memory Control Registers (Flash Control Offset)					
0x000	FMA	R/W	0x0000.0000	Flash Memory Address	258
0x004	FMD	R/W	0x0000.0000	Flash Memory Data	259
0x008	FMC	R/W	0x0000.0000	Flash Memory Control	260
0x00C	FCRIS	RO	0x0000.0000	Flash Controller Raw Interrupt Status	262
0x010	FCIM	R/W	0x0000.0000	Flash Controller Interrupt Mask	263
0x014	FCMISC	R/W1C	0x0000.0000	Flash Controller Masked Interrupt Status and Clear	264
Flash Memory Protection Registers (System Control Offset)					
0x130	FMPRE0	R/W	0xFFFF.FFFF	Flash Memory Protection Read Enable 0	267
0x200	FMPRE0	R/W	0xFFFF.FFFF	Flash Memory Protection Read Enable 0	267
0x134	FMPPE0	R/W	0xFFFF.FFFF	Flash Memory Protection Program Enable 0	268
0x400	FMPPE0	R/W	0xFFFF.FFFF	Flash Memory Protection Program Enable 0	268
0x140	USECRL	R/W	0x31	USec Reload	266
0x1D0	USER_DBG	R/W	0xFFFF.FFFE	User Debug	269
0x1E0	USER_REG0	R/W	0xFFFF.FFFF	User Register 0	270

Table 7-3. Flash Register Map *(continued)*

Offset	Name	Type	Reset	Description	See page
0x1E4	USER_REG1	R/W	0xFFFF.FFFF	User Register 1	271
0x204	FMPRE1	R/W	0xFFFF.FFFF	Flash Memory Protection Read Enable 1	272
0x208	FMPRE2	R/W	0xFFFF.FFFF	Flash Memory Protection Read Enable 2	273
0x20C	FMPRE3	R/W	0xFFFF.FFFF	Flash Memory Protection Read Enable 3	274
0x404	FMPPE1	R/W	0xFFFF.FFFF	Flash Memory Protection Program Enable 1	275
0x408	FMPPE2	R/W	0xFFFF.FFFF	Flash Memory Protection Program Enable 2	276
0x40C	FMPPE3	R/W	0xFFFF.FFFF	Flash Memory Protection Program Enable 3	277

7.5 Flash Register Descriptions (Flash Control Offset)

This section lists and describes the Flash Memory registers, in numerical order by address offset. Registers in this section are relative to the Flash control base address of 0x400F.D000.

Register 1: Flash Memory Address (FMA), offset 0x000

During a write operation, this register contains a 4-byte-aligned address and specifies where the data is written. During erase operations, this register contains a 1 KB-aligned address and specifies which page is erased. Note that the alignment requirements must be met by software or the results of the operation are unpredictable.

Flash Memory Address (FMA)

Base 0x400F.D000
Offset 0x000
Type R/W, reset 0x0000.0000

	31	30	29	28	27	26	25	24	23	22	21	20	19	18	17	16
	reserved														OFFSET	
Type	RO	RO	RO	RO	RO	RO	RO	RO	RO	RO	RO	RO	RO	RO	R/W	R/W
Reset	0	0	0	0	0	0	0	0	0	0	0	0	0	0	0	0

	15	14	13	12	11	10	9	8	7	6	5	4	3	2	1	0
	OFFSET															
Type	R/W	R/W	R/W	R/W	R/W	R/W	R/W	R/W	R/W	R/W	R/W	R/W	R/W	R/W	R/W	R/W
Reset	0	0	0	0	0	0	0	0	0	0	0	0	0	0	0	0

Bit/Field	Name	Type	Reset	Description
31:18	reserved	RO	0x0	Software should not rely on the value of a reserved bit. To provide compatibility with future products, the value of a reserved bit should be preserved across a read-modify-write operation.
17:0	OFFSET	R/W	0x0	Address Offset Address offset in flash where operation is performed, except for nonvolatile registers (see “Nonvolatile Register Programming” on page 255 for details on values for this field).

Register 2: Flash Memory Data (FMD), offset 0x004

This register contains the data to be written during the programming cycle or read during the read cycle. Note that the contents of this register are undefined for a read access of an execute-only block. This register is not used during the erase cycles.

Flash Memory Data (FMD)

Base 0x400F.D000
Offset 0x004
Type R/W, reset 0x0000.0000

	31	30	29	28	27	26	25	24	23	22	21	20	19	18	17	16
	DATA															
Type	R/W	R/W	R/W	R/W	R/W	R/W	R/W	R/W	R/W	R/W	R/W	R/W	R/W	R/W	R/W	R/W
Reset	0	0	0	0	0	0	0	0	0	0	0	0	0	0	0	0

	15	14	13	12	11	10	9	8	7	6	5	4	3	2	1	0
	DATA															
Type	R/W	R/W	R/W	R/W	R/W	R/W	R/W	R/W	R/W	R/W	R/W	R/W	R/W	R/W	R/W	R/W
Reset	0	0	0	0	0	0	0	0	0	0	0	0	0	0	0	0

Bit/Field	Name	Type	Reset	Description
31:0	DATA	R/W	0x0	Data Value Data value for write operation.

Register 3: Flash Memory Control (FMC), offset 0x008

When this register is written, the flash controller initiates the appropriate access cycle for the location specified by the **Flash Memory Address (FMA)** register (see page 258). If the access is a write access, the data contained in the **Flash Memory Data (FMD)** register (see page 259) is written.

This is the final register written and initiates the memory operation. There are four control bits in the lower byte of this register that, when set, initiate the memory operation. The most used of these register bits are the `ERASE` and `WRITE` bits.

It is a programming error to write multiple control bits and the results of such an operation are unpredictable.

Flash Memory Control (FMC)

Base 0x400F.D000
Offset 0x008
Type R/W, reset 0x0000.0000

	31	30	29	28	27	26	25	24	23	22	21	20	19	18	17	16
	WRKEY															
Type	WO	WO	WO	WO	WO	WO	WO	WO	WO	WO	WO	WO	WO	WO	WO	WO
Reset	0	0	0	0	0	0	0	0	0	0	0	0	0	0	0	0

	15	14	13	12	11	10	9	8	7	6	5	4	3	2	1	0
	reserved												COMT	MERASE	ERASE	WRITE
Type	RO	RO	RO	RO	RO	RO	RO	RO	RO	RO	RO	RO	R/W	R/W	R/W	R/W
Reset	0	0	0	0	0	0	0	0	0	0	0	0	0	0	0	0

Bit/Field	Name	Type	Reset	Description
31:16	WRKEY	WO	0x0	Flash Write Key This field contains a write key, which is used to minimize the incidence of accidental flash writes. The value 0xA442 must be written into this field for a write to occur. Writes to the **FMC** register without this `WRKEY` value are ignored. A read of this field returns the value 0.
15:4	reserved	RO	0x0	Software should not rely on the value of a reserved bit. To provide compatibility with future products, the value of a reserved bit should be preserved across a read-modify-write operation.
3	COMT	R/W	0	Commit Register Value Commit (write) of register value to nonvolatile storage. A write of 0 has no effect on the state of this bit. If read, the state of the previous commit access is provided. If the previous commit access is complete, a 0 is returned; otherwise, if the commit access is not complete, a 1 is returned. This can take up to 50 µs.
2	MERASE	R/W	0	Mass Erase Flash Memory If this bit is set, the flash main memory of the device is all erased. A write of 0 has no effect on the state of this bit. If read, the state of the previous mass erase access is provided. If the previous mass erase access is complete, a 0 is returned; otherwise, if the previous mass erase access is not complete, a 1 is returned. This can take up to 250 ms.

Bit/Field	Name	Type	Reset	Description
1	ERASE	R/W	0	Erase a Page of Flash Memory If this bit is set, the page of flash main memory as specified by the contents of **FMA** is erased. A write of 0 has no effect on the state of this bit. If read, the state of the previous erase access is provided. If the previous erase access is complete, a 0 is returned; otherwise, if the previous erase access is not complete, a 1 is returned. This can take up to 25 ms.
0	WRITE	R/W	0	Write a Word into Flash Memory If this bit is set, the data stored in **FMD** is written into the location as specified by the contents of **FMA**. A write of 0 has no effect on the state of this bit. If read, the state of the previous write update is provided. If the previous write access is complete, a 0 is returned; otherwise, if the write access is not complete, a 1 is returned. This can take up to 50 µs.

Register 4: Flash Controller Raw Interrupt Status (FCRIS), offset 0x00C

This register indicates that the flash controller has an interrupt condition. An interrupt is only signaled if the corresponding **FCIM** register bit is set.

Flash Controller Raw Interrupt Status (FCRIS)

Base 0x400F.D000
Offset 0x00C
Type RO, reset 0x0000.0000

	31	30	29	28	27	26	25	24	23	22	21	20	19	18	17	16
	reserved															
Type	RO	RO	RO	RO	RO	RO	RO	RO	RO	RO	RO	RO	RO	RO	RO	RO
Reset	0	0	0	0	0	0	0	0	0	0	0	0	0	0	0	0

	15	14	13	12	11	10	9	8	7	6	5	4	3	2	1	0
	reserved														PRIS	ARIS
Type	RO	RO	RO	RO	RO	RO	RO	RO	RO	RO	RO	RO	RO	RO	RO	RO
Reset	0	0	0	0	0	0	0	0	0	0	0	0	0	0	0	0

Bit/Field	Name	Type	Reset	Description
31:2	reserved	RO	0x0	Software should not rely on the value of a reserved bit. To provide compatibility with future products, the value of a reserved bit should be preserved across a read-modify-write operation.
1	PRIS	RO	0	Programming Raw Interrupt Status This bit provides status on programming cycles which are write or erase actions generated through the **FMC** register bits (see page 260). Value Description 1 The programming cycle has completed. 0 The programming cycle has not completed. This status is sent to the interrupt controller when the `PMASK` bit in the **FCIM** register is set. This bit is cleared by writing a 1 to the `PMISC` bit in the **FCMISC** register.
0	ARIS	RO	0	Access Raw Interrupt Status Value Description 1 A program or erase action was attempted on a block of Flash memory that contradicts the protection policy for that block as set in the **FMPPEn** registers. 0 No access has tried to improperly program or erase the Flash memory. This status is sent to the interrupt controller when the `AMASK` bit in the **FCIM** register is set. This bit is cleared by writing a 1 to the `AMISC` bit in the **FCMISC** register.

Register 5: Flash Controller Interrupt Mask (FCIM), offset 0x010

This register controls whether the flash controller generates interrupts to the controller.

Flash Controller Interrupt Mask (FCIM)

Base 0x400F.D000
Offset 0x010
Type R/W, reset 0x0000.0000

	31	30	29	28	27	26	25	24	23	22	21	20	19	18	17	16
	reserved															
Type	RO	RO	RO	RO	RO	RO	RO	RO	RO	RO	RO	RO	RO	RO	RO	RO
Reset	0	0	0	0	0	0	0	0	0	0	0	0	0	0	0	0

	15	14	13	12	11	10	9	8	7	6	5	4	3	2	1	0
	reserved														PMASK	AMASK
Type	RO	RO	RO	RO	RO	RO	RO	RO	RO	RO	RO	RO	RO	RO	R/W	R/W
Reset	0	0	0	0	0	0	0	0	0	0	0	0	0	0	0	0

Bit/Field	Name	Type	Reset	Description
31:2	reserved	RO	0x0	Software should not rely on the value of a reserved bit. To provide compatibility with future products, the value of a reserved bit should be preserved across a read-modify-write operation.
1	PMASK	R/W	0	Programming Interrupt Mask This bit controls the reporting of the programming raw interrupt status to the interrupt controller. Value Description 1 An interrupt is sent to the interrupt controller when the `PRIS` bit is set. 0 The `PRIS` interrupt is suppressed and not sent to the interrupt controller.
0	AMASK	R/W	0	Access Interrupt Mask This bit controls the reporting of the access raw interrupt status to the interrupt controller. Value Description 1 An interrupt is sent to the interrupt controller when the `ARIS` bit is set. 0 The `ARIS` interrupt is suppressed and not sent to the interrupt controller.

Register 6: Flash Controller Masked Interrupt Status and Clear (FCMISC), offset 0x014

This register provides two functions. First, it reports the cause of an interrupt by indicating which interrupt source or sources are signalling the interrupt. Second, it serves as the method to clear the interrupt reporting.

Flash Controller Masked Interrupt Status and Clear (FCMISC)

Base 0x400F.D000
Offset 0x014
Type R/W1C, reset 0x0000.0000

	31	30	29	28	27	26	25	24	23	22	21	20	19	18	17	16
	reserved															
Type	RO	RO	RO	RO	RO	RO	RO	RO	RO	RO	RO	RO	RO	RO	RO	RO
Reset	0	0	0	0	0	0	0	0	0	0	0	0	0	0	0	0

	15	14	13	12	11	10	9	8	7	6	5	4	3	2	1	0
	reserved														PMISC	AMISC
Type	RO	RO	RO	RO	RO	RO	RO	RO	RO	RO	RO	RO	RO	RO	R/W1C	R/W1C
Reset	0	0	0	0	0	0	0	0	0	0	0	0	0	0	0	0

Bit/Field	Name	Type	Reset	Description
31:2	reserved	RO	0x0	Software should not rely on the value of a reserved bit. To provide compatibility with future products, the value of a reserved bit should be preserved across a read-modify-write operation.
1	PMISC	R/W1C	0	Programming Masked Interrupt Status and Clear Value Description 1 When read, a 1 indicates that an unmasked interrupt was signaled because a programming cycle completed. Writing a 1 to this bit clears `PMISC` and also the `PRIS` bit in the **FCRIS** register (see page 262). 0 When read, a 0 indicates that a programming cycle complete interrupt has not occurred. A write of 0 has no effect on the state of this bit.
0	AMISC	R/W1C	0	Access Masked Interrupt Status and Clear Value Description 1 When read, a 1 indicates that an unmasked interrupt was signaled because a program or erase action was attempted on a block of Flash memory that contradicts the protection policy for that block as set in the **FMPPEn** registers. Writing a 1 to this bit clears `AMISC` and also the `ARIS` bit in the **FCRIS** register (see page 262). 0 When read, a 0 indicates that no improper accesses have occurred. A write of 0 has no effect on the state of this bit.

7.6 Flash Register Descriptions (System Control Offset)

The remainder of this section lists and describes the Flash Memory registers, in numerical order by address offset. Registers in this section are relative to the System Control base address of 0x400F.E000.

Register 7: USec Reload (USECRL), offset 0x140

Note: Offset is relative to System Control base address of 0x400F.E000

This register is provided as a means of creating a 1-µs tick divider reload value for the flash controller. The internal flash has specific minimum and maximum requirements on the length of time the high voltage write pulse can be applied. It is required that this register contain the operating frequency (in MHz -1) whenever the flash is being erased or programmed. The user is required to change this value if the clocking conditions are changed for a flash erase/program operation.

USec Reload (USECRL)

Base 0x400F.E000
Offset 0x140
Type R/W, reset 0x31

	31	30	29	28	27	26	25	24	23	22	21	20	19	18	17	16
	reserved															
Type	RO	RO	RO	RO	RO	RO	RO	RO	RO	RO	RO	RO	RO	RO	RO	RO
Reset	0	0	0	0	0	0	0	0	0	0	0	0	0	0	0	0

	15	14	13	12	11	10	9	8	7	6	5	4	3	2	1	0
	reserved								USEC							
Type	RO	RO	RO	RO	RO	RO	RO	RO	R/W	R/W	R/W	R/W	R/W	R/W	R/W	R/W
Reset	0	0	0	0	0	0	0	0	0	0	1	1	0	0	0	1

Bit/Field	Name	Type	Reset	Description
31:8	reserved	RO	0x0	Software should not rely on the value of a reserved bit. To provide compatibility with future products, the value of a reserved bit should be preserved across a read-modify-write operation.
7:0	USEC	R/W	0x31	Microsecond Reload Value MHz -1 of the controller clock when the flash is being erased or programmed. If the maximum system frequency is being used, USEC should be set to 0x31 (50 MHz) whenever the flash is being erased or programmed.

Register 8: Flash Memory Protection Read Enable 0 (FMPRE0), offset 0x130 and 0x200

Note: This register is aliased for backwards compatability.

Note: Offset is relative to System Control base address of 0x400FE000.

This register stores the read-only protection bits for each 2-KB flash block (**FMPPEn** stores the execute-only bits). Flash memory up to a total of 64 KB is controlled by this register. Other **FMPREn** registers (if any) provide protection for other 64K blocks. This register is loaded during the power-on reset sequence. The factory settings for the **FMPREn** and **FMPPEn** registers are a value of 1 for all implemented banks. This achieves a policy of open access and programmability. The register bits may be changed by writing the specific register bit. However, this register is R/W0; the user can only change the protection bit from a 1 to a 0 (and may NOT change a 0 to a 1). The changes are not permanent until the register is committed (saved), at which point the bit change is permanent. If a bit is changed from a 1 to a 0 and not committed, it may be restored by executing a power-on reset sequence. The reset value shown only applies to power-on reset; any other type of reset does not affect this register. For additional information, see the "Flash Memory Protection" section.

Flash Memory Protection Read Enable 0 (FMPRE0)

Base 0x400F.E000
Offset 0x130 and 0x200
Type R/W, reset 0xFFFF.FFFF

	31	30	29	28	27	26	25	24	23	22	21	20	19	18	17	16
	READ_ENABLE															
Type	R/W	R/W	R/W	R/W	R/W	R/W	R/W	R/W	R/W	R/W	R/W	R/W	R/W	R/W	R/W	R/W
Reset	1	1	1	1	1	1	1	1	1	1	1	1	1	1	1	1

	15	14	13	12	11	10	9	8	7	6	5	4	3	2	1	0
	READ_ENABLE															
Type	R/W	R/W	R/W	R/W	R/W	R/W	R/W	R/W	R/W	R/W	R/W	R/W	R/W	R/W	R/W	R/W
Reset	1	1	1	1	1	1	1	1	1	1	1	1	1	1	1	1

Bit/Field	Name	Type	Reset	Description
31:0	READ_ENABLE	R/W	0xFFFFFFFF	Flash Read Enable. Enables 2-KB Flash memory blocks to be executed or read. The policies may be combined as shown in the table “Flash Protection Policy Combinations”. Value — Description 0xFFFFFFFF — Bits [31:0] each enable protection on a 2-KB block of Flash memory up to the total of 64 KB.

Register 9: Flash Memory Protection Program Enable 0 (FMPPE0), offset 0x134 and 0x400

Note: This register is aliased for backwards compatability.

Note: Offset is relative to System Control base address of 0x400FE000.

This register stores the execute-only protection bits for each 2-KB flash block (**FMPREn** stores the execute-only bits). Flash memory up to a total of 64 KB is controlled by this register. Other **FMPPEn** registers (if any) provide protection for other 64K blocks. This register is loaded during the power-on reset sequence. The factory settings for the **FMPREn** and **FMPPEn** registers are a value of 1 for all implemented banks. This achieves a policy of open access and programmability. The register bits may be changed by writing the specific register bit. However, this register is R/W0; the user can only change the protection bit from a 1 to a 0 (and may NOT change a 0 to a 1). The changes are not permanent until the register is committed (saved), at which point the bit change is permanent. If a bit is changed from a 1 to a 0 and not committed, it may be restored by executing a power-on reset sequence. The reset value shown only applies to power-on reset; any other type of reset does not affect this register. For additional information, see the "Flash Memory Protection" section.

Flash Memory Protection Program Enable 0 (FMPPE0)

Base 0x400F.E000
Offset 0x134 and 0x400
Type R/W, reset 0xFFFF.FFFF

	31	30	29	28	27	26	25	24	23	22	21	20	19	18	17	16
	PROG_ENABLE															
Type	R/W	R/W	R/W	R/W	R/W	R/W	R/W	R/W	R/W	R/W	R/W	R/W	R/W	R/W	R/W	R/W
Reset	1	1	1	1	1	1	1	1	1	1	1	1	1	1	1	1

	15	14	13	12	11	10	9	8	7	6	5	4	3	2	1	0
	PROG_ENABLE															
Type	R/W	R/W	R/W	R/W	R/W	R/W	R/W	R/W	R/W	R/W	R/W	R/W	R/W	R/W	R/W	R/W
Reset	1	1	1	1	1	1	1	1	1	1	1	1	1	1	1	1

Bit/Field	Name	Type	Reset	Description
31:0	PROG_ENABLE	R/W	0xFFFFFFFF	Flash Programming Enable Configures 2-KB flash blocks to be execute only. The policies may be combined as shown in the table “Flash Protection Policy Combinations”. Value — Description 0xFFFFFFFF — Bits [31:0] each enable protection on a 2-KB block of Flash memory up to the total of 64 KB.

Register 10: User Debug (USER_DBG), offset 0x1D0

Note: Offset is relative to System Control base address of 0x400FE000.

This register provides a write-once mechanism to disable external debugger access to the device in addition to 27 additional bits of user-defined data. The DBG0 bit (bit 0) is set to 0 from the factory and the DBG1 bit (bit 1) is set to 1, which enables external debuggers. Changing the DBG1 bit to 0 disables any external debugger access to the device permanently, starting with the next power-up cycle of the device. The NW bit (bit 31) indicates that the register has not yet been committed and is controlled through hardware to ensure that the register is only committed once. Prior to being committed, bits can only be changed from 1 to 0. The reset value shown only applies to power-on reset; any other type of reset does not affect this register. Once committed, this register cannot be restored to the factory default value.

User Debug (USER_DBG)

Base 0x400F.E000
Offset 0x1D0
Type R/W, reset 0xFFFF.FFFE

	31	30	29	28	27	26	25	24	23	22	21	20	19	18	17	16
	NW	DATA														
Type	R/W	R/W	R/W	R/W	R/W	R/W	R/W	R/W	R/W	R/W	R/W	R/W	R/W	R/W	R/W	R/W
Reset	1	1	1	1	1	1	1	1	1	1	1	1	1	1	1	1

	15	14	13	12	11	10	9	8	7	6	5	4	3	2	1	0
	DATA														DBG1	DBG0
Type	R/W	R/W	R/W	R/W	R/W	R/W	R/W	R/W	R/W	R/W	R/W	R/W	R/W	R/W	R/W	R/W
Reset	1	1	1	1	1	1	1	1	1	1	1	1	1	1	1	0

Bit/Field	Name	Type	Reset	Description
31	NW	R/W	1	User Debug Not Written When set, this bit indicates that this 32-bit register has not been committed. When clear, this bit specifies that this register has been committed and may not be committed again.
30:2	DATA	R/W	0x1FFFFFFF	User Data Contains the user data value. This field is initialized to all 1s and can only be committed once.
1	DBG1	R/W	1	Debug Control 1 The `DBG1` bit must be 1 and `DBG0` must be 0 for debug to be available.
0	DBG0	R/W	0	Debug Control 0 The `DBG1` bit must be 1 and `DBG0` must be 0 for debug to be available.

Register 11: User Register 0 (USER_REG0), offset 0x1E0

Note: Offset is relative to System Control base address of 0x400FE000.

This register provides 31 bits of user-defined data that is non-volatile and can only be committed once. Bit 31 indicates that the register is available to be committed and is controlled through hardware to ensure that the register is only committed once. Prior to being committed, bits can only be changed from 1 to 0. The reset value shown only applies to power-on reset; any other type of reset does not affect this register. The write-once characteristics of this register are useful for keeping static information like communication addresses that need to be unique per part and would otherwise require an external EEPROM or other non-volatile device. Once committed, this register cannot be restored to the factory default value.

User Register 0 (USER_REG0)

Base 0x400F.E000
Offset 0x1E0
Type R/W, reset 0xFFFF.FFFF

	31	30	29	28	27	26	25	24	23	22	21	20	19	18	17	16
	NW	DATA														
Type	R/W	R/W	R/W	R/W	R/W	R/W	R/W	R/W	R/W	R/W	R/W	R/W	R/W	R/W	R/W	R/W
Reset	1	1	1	1	1	1	1	1	1	1	1	1	1	1	1	1

	15	14	13	12	11	10	9	8	7	6	5	4	3	2	1	0
	DATA															
Type	R/W	R/W	R/W	R/W	R/W	R/W	R/W	R/W	R/W	R/W	R/W	R/W	R/W	R/W	R/W	R/W
Reset	1	1	1	1	1	1	1	1	1	1	1	1	1	1	1	1

Bit/Field	Name	Type	Reset	Description
31	NW	R/W	1	Not Written When set, this bit indicates that this 32-bit register has not been committed. When clear, this bit specifies that this register has been committed and may not be committed again.
30:0	DATA	R/W	0x7FFFFFFF	User Data Contains the user data value. This field is initialized to all 1s and can only be committed once.

Register 12: User Register 1 (USER_REG1), offset 0x1E4

Note: Offset is relative to System Control base address of 0x400FE000.

This register provides 31 bits of user-defined data that is non-volatile and can only be committed once. Bit 31 indicates that the register is available to be committed and is controlled through hardware to ensure that the register is only committed once. Prior to being committed, bits can only be changed from 1 to 0. The reset value shown only applies to power-on reset; any other type of reset does not affect this register. The write-once characteristics of this register are useful for keeping static information like communication addresses that need to be unique per part and would otherwise require an external EEPROM or other non-volatile device. Once committed, this register cannot be restored to the factory default value.

User Register 1 (USER_REG1)

Base 0x400F.E000
Offset 0x1E4
Type R/W, reset 0xFFFF.FFFF

	31	30	29	28	27	26	25	24	23	22	21	20	19	18	17	16
	NW	DATA														
Type	R/W	R/W	R/W	R/W	R/W	R/W	R/W	R/W	R/W	R/W	R/W	R/W	R/W	R/W	R/W	R/W
Reset	1	1	1	1	1	1	1	1	1	1	1	1	1	1	1	1

	15	14	13	12	11	10	9	8	7	6	5	4	3	2	1	0
	DATA															
Type	R/W	R/W	R/W	R/W	R/W	R/W	R/W	R/W	R/W	R/W	R/W	R/W	R/W	R/W	R/W	R/W
Reset	1	1	1	1	1	1	1	1	1	1	1	1	1	1	1	1

Bit/Field	Name	Type	Reset	Description
31	NW	R/W	1	Not Written When set, this bit indicates that this 32-bit register has not been committed. When clear, this bit specifies that this register has been committed and may not be committed again.
30:0	DATA	R/W	0x7FFFFFFF	User Data Contains the user data value. This field is initialized to all 1s and can only be committed once.

Register 13: Flash Memory Protection Read Enable 1 (FMPRE1), offset 0x204

Note: Offset is relative to System Control base address of 0x400FE000.

This register stores the read-only protection bits for each 2-KB flash block (**FMPPEn** stores the execute-only bits). Flash memory up to a total of 64 KB is controlled by this register. Other **FMPREn** registers (if any) provide protection for other 64K blocks. This register is loaded during the power-on reset sequence. The factory settings for the **FMPREn** and **FMPPEn** registers are a value of 1 for all implemented banks. This achieves a policy of open access and programmability. The register bits may be changed by writing the specific register bit. However, this register is R/W0; the user can only change the protection bit from a 1 to a 0 (and may NOT change a 0 to a 1). The changes are not permanent until the register is committed (saved), at which point the bit change is permanent. If a bit is changed from a 1 to a 0 and not committed, it may be restored by executing a power-on reset sequence. The reset value shown only applies to power-on reset; any other type of reset does not affect this register. If the Flash memory size on the device is less than 64 KB, this register usually reads as zeroes, but software should not rely on these bits to be zero. For additional information, see the "Flash Memory Protection" section.

Flash Memory Protection Read Enable 1 (FMPRE1)

Base 0x400F.E000
Offset 0x204
Type R/W, reset 0xFFFF.FFFF

	31	30	29	28	27	26	25	24	23	22	21	20	19	18	17	16
	READ_ENABLE															
Type	R/W	R/W	R/W	R/W	R/W	R/W	R/W	R/W	R/W	R/W	R/W	R/W	R/W	R/W	R/W	R/W
Reset	1	1	1	1	1	1	1	1	1	1	1	1	1	1	1	1

	15	14	13	12	11	10	9	8	7	6	5	4	3	2	1	0
	READ_ENABLE															
Type	R/W	R/W	R/W	R/W	R/W	R/W	R/W	R/W	R/W	R/W	R/W	R/W	R/W	R/W	R/W	R/W
Reset	1	1	1	1	1	1	1	1	1	1	1	1	1	1	1	1

Bit/Field	Name	Type	Reset	Description
31:0	READ_ENABLE	R/W	0xFFFFFFFF	Flash Read Enable. Enables 2-KB Flash memory blocks to be executed or read. The policies may be combined as shown in the table “Flash Protection Policy Combinations”. Value — Description 0xFFFFFFFF — Bits [31:0] each enable protection on a 2-KB block of Flash memory in memory range from 65 to 128 KB.

Register 14: Flash Memory Protection Read Enable 2 (FMPRE2), offset 0x208

Note: Offset is relative to System Control base address of 0x400FE000.

This register stores the read-only protection bits for each 2-KB flash block (**FMPPEn** stores the execute-only bits). This register is loaded during the power-on reset sequence. The factory settings for the **FMPREn** and **FMPPEn** registers are a value of 1 for all implemented banks. This achieves a policy of open access and programmability. The register bits may be changed by writing the specific register bit. However, this register is R/W0; the user can only change the protection bit from a 1 to a 0 (and may NOT change a 0 to a 1). For additional information, see the "Flash Memory Protection" section.

Flash Memory Protection Read Enable 2 (FMPRE2)

Base 0x400F.E000
Offset 0x208
Type R/W, reset 0xFFFF.FFFF

	31	30	29	28	27	26	25	24	23	22	21	20	19	18	17	16
	READ_ENABLE															
Type	R/W	R/W	R/W	R/W	R/W	R/W	R/W	R/W	R/W	R/W	R/W	R/W	R/W	R/W	R/W	R/W
Reset	1	1	1	1	1	1	1	1	1	1	1	1	1	1	1	1

	15	14	13	12	11	10	9	8	7	6	5	4	3	2	1	0
	READ_ENABLE															
Type	R/W	R/W	R/W	R/W	R/W	R/W	R/W	R/W	R/W	R/W	R/W	R/W	R/W	R/W	R/W	R/W
Reset	1	1	1	1	1	1	1	1	1	1	1	1	1	1	1	1

Bit/Field	Name	Type	Reset	Description
31:0	READ_ENABLE	R/W	0xFFFFFFFF	Flash Read Enable Enables 2-KB flash blocks to be executed or read. The policies may be combined as shown in the table “Flash Protection Policy Combinations”. Value — Description 0xFFFFFFFF — Enables 256 KB of flash.

Register 15: Flash Memory Protection Read Enable 3 (FMPRE3), offset 0x20C

Note: Offset is relative to System Control base address of 0x400FE000.

This register stores the read-only protection bits for each 2-KB flash block (**FMPPEn** stores the execute-only bits). This register is loaded during the power-on reset sequence. The factory settings for the **FMPREn** and **FMPPEn** registers are a value of 1 for all implemented banks. This achieves a policy of open access and programmability. The register bits may be changed by writing the specific register bit. However, this register is R/W0; the user can only change the protection bit from a 1 to a 0 (and may NOT change a 0 to a 1). The changes are not permanent until the register is committed (saved), at which point the bit change is permanent. If a bit is changed from a 1 to a 0 and not committed, it may be restored by executing a power-on reset sequence. For additional information, see the "Flash Memory Protection" section.

Flash Memory Protection Read Enable 3 (FMPRE3)

Base 0x400F.E000
Offset 0x20C
Type R/W, reset 0xFFFF.FFFF

	31	30	29	28	27	26	25	24	23	22	21	20	19	18	17	16
	READ_ENABLE															
Type	R/W	R/W	R/W	R/W	R/W	R/W	R/W	R/W	R/W	R/W	R/W	R/W	R/W	R/W	R/W	R/W
Reset	1	1	1	1	1	1	1	1	1	1	1	1	1	1	1	1

	15	14	13	12	11	10	9	8	7	6	5	4	3	2	1	0
	READ_ENABLE															
Type	R/W	R/W	R/W	R/W	R/W	R/W	R/W	R/W	R/W	R/W	R/W	R/W	R/W	R/W	R/W	R/W
Reset	1	1	1	1	1	1	1	1	1	1	1	1	1	1	1	1

Bit/Field	Name	Type	Reset	Description
31:0	READ_ENABLE	R/W	0xFFFFFFFF	Flash Read Enable Enables 2-KB flash blocks to be executed or read. The policies may be combined as shown in the table “Flash Protection Policy Combinations”. Value — Description 0xFFFFFFFF — Enables 256 KB of flash.

Register 16: Flash Memory Protection Program Enable 1 (FMPPE1), offset 0x404

Note: Offset is relative to System Control base address of 0x400FE000.

This register stores the execute-only protection bits for each 2-KB flash block (**FMPREn** stores the execute-only bits). Flash memory up to a total of 64 KB is controlled by this register. Other **FMPPEn** registers (if any) provide protection for other 64K blocks. This register is loaded during the power-on reset sequence. The factory settings for the **FMPREn** and **FMPPEn** registers are a value of 1 for all implemented banks. This achieves a policy of open access and programmability. The register bits may be changed by writing the specific register bit. However, this register is R/W0; the user can only change the protection bit from a 1 to a 0 (and may NOT change a 0 to a 1). The changes are not permanent until the register is committed (saved), at which point the bit change is permanent. If a bit is changed from a 1 to a 0 and not committed, it may be restored by executing a power-on reset sequence. The reset value shown only applies to power-on reset; any other type of reset does not affect this register. If the Flash memory size on the device is less than 64 KB, this register usually reads as zeroes, but software should not rely on these bits to be zero. For additional information, see the "Flash Memory Protection" section.

Flash Memory Protection Program Enable 1 (FMPPE1)

Base 0x400F.E000
Offset 0x404
Type R/W, reset 0xFFFF.FFFF

	31	30	29	28	27	26	25	24	23	22	21	20	19	18	17	16
	PROG_ENABLE															
Type	R/W	R/W	R/W	R/W	R/W	R/W	R/W	R/W	R/W	R/W	R/W	R/W	R/W	R/W	R/W	R/W
Reset	1	1	1	1	1	1	1	1	1	1	1	1	1	1	1	1

	15	14	13	12	11	10	9	8	7	6	5	4	3	2	1	0
	PROG_ENABLE															
Type	R/W	R/W	R/W	R/W	R/W	R/W	R/W	R/W	R/W	R/W	R/W	R/W	R/W	R/W	R/W	R/W
Reset	1	1	1	1	1	1	1	1	1	1	1	1	1	1	1	1

Bit/Field	Name	Type	Reset	Description
31:0	PROG_ENABLE	R/W	0xFFFFFFFF	Flash Programming Enable

Value	Description
0xFFFFFFFF	Bits [31:0] each enable protection on a 2-KB block of Flash memory in memory range from 65 to 128 KB.

Register 17: Flash Memory Protection Program Enable 2 (FMPPE2), offset 0x408

Note: Offset is relative to System Control base address of 0x400FE000.

This register stores the execute-only protection bits for each 2-KB flash block (**FMPREn** stores the execute-only bits). This register is loaded during the power-on reset sequence. The factory settings for the **FMPREn** and **FMPPEn** registers are a value of 1 for all implemented banks. This achieves a policy of open access and programmability. The register bits may be changed by writing the specific register bit. However, this register is R/W0; the user can only change the protection bit from a 1 to a 0 (and may NOT change a 0 to a 1). The changes are not permanent until the register is committed (saved), at which point the bit change is permanent. If a bit is changed from a 1 to a 0 and not committed, it may be restored by executing a power-on reset sequence. For additional information, see the "Flash Memory Protection" section.

Flash Memory Protection Program Enable 2 (FMPPE2)

Base 0x400F.E000
Offset 0x408
Type R/W, reset 0xFFFF.FFFF

	31	30	29	28	27	26	25	24	23	22	21	20	19	18	17	16
	PROG_ENABLE															
Type	R/W	R/W	R/W	R/W	R/W	R/W	R/W	R/W	R/W	R/W	R/W	R/W	R/W	R/W	R/W	R/W
Reset	1	1	1	1	1	1	1	1	1	1	1	1	1	1	1	1

	15	14	13	12	11	10	9	8	7	6	5	4	3	2	1	0
	PROG_ENABLE															
Type	R/W	R/W	R/W	R/W	R/W	R/W	R/W	R/W	R/W	R/W	R/W	R/W	R/W	R/W	R/W	R/W
Reset	1	1	1	1	1	1	1	1	1	1	1	1	1	1	1	1

Bit/Field	Name	Type	Reset	Description
31:0	PROG_ENABLE	R/W	0xFFFFFFFF	Flash Programming Enable Configures 2-KB flash blocks to be execute only. The policies may be combined as shown in the table “Flash Protection Policy Combinations”. Value — Description 0xFFFFFFFF — Enables 256 KB of flash.

Register 18: Flash Memory Protection Program Enable 3 (FMPPE3), offset 0x40C

Note: Offset is relative to System Control base address of 0x400FE000.

This register stores the execute-only protection bits for each 2-KB flash block (**FMPREn** stores the execute-only bits). This register is loaded during the power-on reset sequence. The factory settings for the **FMPREn** and **FMPPEn** registers are a value of 1 for all implemented banks. This achieves a policy of open access and programmability. The register bits may be changed by writing the specific register bit. However, this register is R/W0; the user can only change the protection bit from a 1 to a 0 (and may NOT change a 0 to a 1). The changes are not permanent until the register is committed (saved), at which point the bit change is permanent. If a bit is changed from a 1 to a 0 and not committed, it may be restored by executing a power-on reset sequence. For additional information, see the "Flash Memory Protection" section.

Flash Memory Protection Program Enable 3 (FMPPE3)

Base 0x400F.E000
Offset 0x40C
Type R/W, reset 0xFFFF.FFFF

	31	30	29	28	27	26	25	24	23	22	21	20	19	18	17	16
	PROG_ENABLE															
Type	R/W	R/W	R/W	R/W	R/W	R/W	R/W	R/W	R/W	R/W	R/W	R/W	R/W	R/W	R/W	R/W
Reset	1	1	1	1	1	1	1	1	1	1	1	1	1	1	1	1

	15	14	13	12	11	10	9	8	7	6	5	4	3	2	1	0
	PROG_ENABLE															
Type	R/W	R/W	R/W	R/W	R/W	R/W	R/W	R/W	R/W	R/W	R/W	R/W	R/W	R/W	R/W	R/W
Reset	1	1	1	1	1	1	1	1	1	1	1	1	1	1	1	1

Bit/Field	Name	Type	Reset	Description
31:0	PROG_ENABLE	R/W	0xFFFFFFFF	Flash Programming Enable Configures 2-KB flash blocks to be execute only. The policies may be combined as shown in the table “Flash Protection Policy Combinations”. Value — Description 0xFFFFFFFF — Enables 256 KB of flash.

8 General-Purpose Input/Outputs (GPIOs)

The GPIO module is composed of eight physical GPIO blocks, each corresponding to an individual GPIO port (Port A, Port B, Port C, Port D, Port E, Port F, Port G, Port H). The GPIO module supports 21-60 programmable input/output pins, depending on the peripherals being used.

The GPIO module has the following features:

- 21-60 GPIOs, depending on configuration
- 5-V-tolerant in input configuration
- Fast toggle capable of a change every two clock cycles
- Programmable control for GPIO interrupts
  - Interrupt generation masking
  - Edge-triggered on rising, falling, or both
  - Level-sensitive on High or Low values
- Bit masking in both read and write operations through address lines
- Pins configured as digital inputs are Schmitt-triggered.
- Programmable control for GPIO pad configuration
  - Weak pull-up or pull-down resistors
  - 2-mA, 4-mA, and 8-mA pad drive for digital communication; up to four pads can be configured with an 18-mA pad drive for high-current applications
  - Slew rate control for the 8-mA drive
  - Open drain enables
  - Digital input enables

8.1 Signal Description

GPIO signals have alternate hardware functions. Table 8-4 on page 282 and Table 8-5 on page 283 list the GPIO pins and the digital alternate functions. Other analog signals are 5-V tolerant and are connected directly to their circuitry (`C0-`, `C0+`, `C1-`, `C1+`). These signals are configured by clearing the `DEN` bit in the **GPIO Digital Enable (GPIODEN)** register. The digital alternate hardware functions are enabled by setting the appropriate bit in the **GPIO Alternate Function Select (GPIOAFSEL)** and **GPIODEN** registers and configuring the `PMCx` bit field in the **GPIO Port Control (GPIOPCTL)** register to the numeric enoding shown in the table below. Note that each pin must be programmed individually; no type of grouping is implied by the columns in the table.

Important: All GPIO pins are configured as GPIOs and tri-stated by default (**GPIOAFSEL**=0, **GPIODEN**=0, **GPIOPDR**=0, **GPIOPUR**=0, and **GPIOPCTL**=0, with the exception of the four JTAG/SWD pins (shown in the table below). A Power-On-Reset ($\overline{\text{POR}}$) or asserting $\overline{\text{RST}}$ puts the pins back to their default state.

Table 8-1. GPIO Pins With Non-Zero Reset Values

GPIO Pins	Default State	GPIOAFSEL	GPIODEN	GPIOPDR	GPIOPUR	GPIOPCTL
PA[1:0]	UART0	1	1	0	0	0x1
PA[5:2]	SSI0	1	1	0	0	0x1
PB[3:2]	I^2C0	1	1	0	0	0x1
PC[3:0]	JTAG/SWD	1	1	0	1	0x3

Table 8-2. GPIO Pins and Alternate Functions (100LQFP)

IO	Pin Number	Multiplexed Function	Multiplexed Function
PA0	26	U0Rx	
PA1	27	U0Tx	
PA2	28	SSI0Clk	
PA3	29	SSI0Fss	
PA4	30	SSI0Rx	
PA5	31	SSI0Tx	
PA6	34	I2C1SCL	
PA7	35	I2C1SDA	
PB0	66	CCP0	
PB1	67	CCP2	
PB2	70	I2C0SCL	
PB3	71	I2C0SDA	
PB4	92	C0-	
PB5	91	C1-	
PB6	90	C0+	
PB7	89	TRST	
PC0	80	TCK	SWCLK
PC1	79	TMS	SWDIO
PC2	78	TDI	
PC3	77	TDO	SWO
PC4	25	CCP5	
PC5	24	C1+	
PC6	23	CCP3	
PC7	22	CCP4	
PD0	10	CAN0Rx	
PD1	11	CAN0Tx	
PD2	12	U1Rx	
PD3	13	U1Tx	
PD4	95		
PD5	96		
PD6	99		
PD7	100	CCP1	
PE0	72	SSI1Clk	

Table 8-2. GPIO Pins and Alternate Functions (100LQFP) *(continued)*

IO	Pin Number	Multiplexed Function	Multiplexed Function
PE1	73	SSI1Fss	
PE2	74	SSI1Rx	
PE3	75	SSI1Tx	
PE4	6		
PE5	5		
PE6	2	C1o	
PE7	1		
PF0	47		
PF1	61		
PF2	60		
PF3	59		
PF4	58	C0o	
PF5	46		
PF6	43		
PF7	42		
PG0	19	U2Rx	
PG1	18	U2Tx	
PG2	17		
PG3	16		
PG4	41		
PG5	40		
PG6	37		
PG7	36		
PH0	86	CCP6	
PH1	85	CCP7	
PH2	84		
PH3	83		

Table 8-3. GPIO Pins and Alternate Functions (108BGA)

IO	Pin Number	Multiplexed Function	Multiplexed Function
PA0	L3	U0Rx	
PA1	M3	U0Tx	
PA2	M4	SSI0Clk	
PA3	L4	SSI0Fss	
PA4	L5	SSI0Rx	
PA5	M5	SSI0Tx	
PA6	L6	I2C1SCL	
PA7	M6	I2C1SDA	
PB0	E12	CCP0	
PB1	D12	CCP2	
PB2	C11	I2C0SCL	

Table 8-3. GPIO Pins and Alternate Functions (108BGA) *(continued)*

IO	Pin Number	Multiplexed Function	Multiplexed Function
PB3	C12	I2C0SDA	
PB4	A6	C0-	
PB5	B7	C1-	
PB6	A7	C0+	
PB7	A8	TRST	
PC0	A9	TCK	SWCLK
PC1	B9	TMS	SWDIO
PC2	B8	TDI	
PC3	A10	TDO	SWO
PC4	L1	CCP5	
PC5	M1	C1+	
PC6	M2	CCP3	
PC7	L2	CCP4	
PD0	G1	CAN0Rx	
PD1	G2	CAN0Tx	
PD2	H2	U1Rx	
PD3	H1	U1Tx	
PD4	E1		
PD5	E2		
PD6	F2		
PD7	F1	CCP1	
PE0	A11	SSI1Clk	
PE1	B12	SSI1Fss	
PE2	B11	SSI1Rx	
PE3	A12	SSI1Tx	
PE4	D1		
PE5	D2		
PE6	C2	C1o	
PE7	C1		
PF0	M9		
PF1	H12		
PF2	J11		
PF3	J12		
PF4	L9	C0o	
PF5	L8		
PF6	M8		
PF7	K4		
PG0	K1	U2Rx	
PG1	K2	U2Tx	
PG2	J1		
PG3	J2		

Table 8-3. GPIO Pins and Alternate Functions (108BGA) *(continued)*

IO	Pin Number	Multiplexed Function	Multiplexed Function
PG4	K3		
PG5	M7		
PG6	L7		
PG7	C10		
PH0	C9	CCP6	
PH1	C8	CCP7	
PH2	D11		
PH3	D10		

Table 8-4. GPIO Signals (100LQFP)

Pin Name	Pin Number	Pin Type	Buffer Type[a]	Description
PA0	26	I/O	TTL	GPIO port A bit 0.
PA1	27	I/O	TTL	GPIO port A bit 1.
PA2	28	I/O	TTL	GPIO port A bit 2.
PA3	29	I/O	TTL	GPIO port A bit 3.
PA4	30	I/O	TTL	GPIO port A bit 4.
PA5	31	I/O	TTL	GPIO port A bit 5.
PA6	34	I/O	TTL	GPIO port A bit 6.
PA7	35	I/O	TTL	GPIO port A bit 7.
PB0	66	I/O	TTL	GPIO port B bit 0.
PB1	67	I/O	TTL	GPIO port B bit 1.
PB2	70	I/O	TTL	GPIO port B bit 2.
PB3	71	I/O	TTL	GPIO port B bit 3.
PB4	92	I/O	TTL	GPIO port B bit 4.
PB5	91	I/O	TTL	GPIO port B bit 5.
PB6	90	I/O	TTL	GPIO port B bit 6.
PB7	89	I/O	TTL	GPIO port B bit 7.
PC0	80	I/O	TTL	GPIO port C bit 0.
PC1	79	I/O	TTL	GPIO port C bit 1.
PC2	78	I/O	TTL	GPIO port C bit 2.
PC3	77	I/O	TTL	GPIO port C bit 3.
PC4	25	I/O	TTL	GPIO port C bit 4.
PC5	24	I/O	TTL	GPIO port C bit 5.
PC6	23	I/O	TTL	GPIO port C bit 6.
PC7	22	I/O	TTL	GPIO port C bit 7.
PD0	10	I/O	TTL	GPIO port D bit 0.
PD1	11	I/O	TTL	GPIO port D bit 1.
PD2	12	I/O	TTL	GPIO port D bit 2.
PD3	13	I/O	TTL	GPIO port D bit 3.
PD4	95	I/O	TTL	GPIO port D bit 4.
PD5	96	I/O	TTL	GPIO port D bit 5.

Table 8-4. GPIO Signals (100LQFP) *(continued)*

Pin Name	Pin Number	Pin Type	Buffer Type[a]	Description
PD6	99	I/O	TTL	GPIO port D bit 6.
PD7	100	I/O	TTL	GPIO port D bit 7.
PE0	72	I/O	TTL	GPIO port E bit 0.
PE1	73	I/O	TTL	GPIO port E bit 1.
PE2	74	I/O	TTL	GPIO port E bit 2.
PE3	75	I/O	TTL	GPIO port E bit 3.
PE4	6	I/O	TTL	GPIO port E bit 4.
PE5	5	I/O	TTL	GPIO port E bit 5.
PE6	2	I/O	TTL	GPIO port E bit 6.
PE7	1	I/O	TTL	GPIO port E bit 7.
PF0	47	I/O	TTL	GPIO port F bit 0.
PF1	61	I/O	TTL	GPIO port F bit 1.
PF2	60	I/O	TTL	GPIO port F bit 2.
PF3	59	I/O	TTL	GPIO port F bit 3.
PF4	58	I/O	TTL	GPIO port F bit 4.
PF5	46	I/O	TTL	GPIO port F bit 5.
PF6	43	I/O	TTL	GPIO port F bit 6.
PF7	42	I/O	TTL	GPIO port F bit 7.
PG0	19	I/O	TTL	GPIO port G bit 0.
PG1	18	I/O	TTL	GPIO port G bit 1.
PG2	17	I/O	TTL	GPIO port G bit 2.
PG3	16	I/O	TTL	GPIO port G bit 3.
PG4	41	I/O	TTL	GPIO port G bit 4.
PG5	40	I/O	TTL	GPIO port G bit 5.
PG6	37	I/O	TTL	GPIO port G bit 6.
PG7	36	I/O	TTL	GPIO port G bit 7.
PH0	86	I/O	TTL	GPIO port H bit 0.
PH1	85	I/O	TTL	GPIO port H bit 1.
PH2	84	I/O	TTL	GPIO port H bit 2.
PH3	83	I/O	TTL	GPIO port H bit 3.

a. The TTL designation indicates the pin has TTL-compatible voltage levels.

Table 8-5. GPIO Signals (108BGA)

Pin Name	Pin Number	Pin Type	Buffer Type[a]	Description
PA0	L3	I/O	TTL	GPIO port A bit 0.
PA1	M3	I/O	TTL	GPIO port A bit 1.
PA2	M4	I/O	TTL	GPIO port A bit 2.
PA3	L4	I/O	TTL	GPIO port A bit 3.
PA4	L5	I/O	TTL	GPIO port A bit 4.
PA5	M5	I/O	TTL	GPIO port A bit 5.
PA6	L6	I/O	TTL	GPIO port A bit 6.

Table 8-5. GPIO Signals (108BGA) *(continued)*

Pin Name	Pin Number	Pin Type	Buffer Type[a]	Description
PA7	M6	I/O	TTL	GPIO port A bit 7.
PB0	E12	I/O	TTL	GPIO port B bit 0.
PB1	D12	I/O	TTL	GPIO port B bit 1.
PB2	C11	I/O	TTL	GPIO port B bit 2.
PB3	C12	I/O	TTL	GPIO port B bit 3.
PB4	A6	I/O	TTL	GPIO port B bit 4.
PB5	B7	I/O	TTL	GPIO port B bit 5.
PB6	A7	I/O	TTL	GPIO port B bit 6.
PB7	A8	I/O	TTL	GPIO port B bit 7.
PC0	A9	I/O	TTL	GPIO port C bit 0.
PC1	B9	I/O	TTL	GPIO port C bit 1.
PC2	B8	I/O	TTL	GPIO port C bit 2.
PC3	A10	I/O	TTL	GPIO port C bit 3.
PC4	L1	I/O	TTL	GPIO port C bit 4.
PC5	M1	I/O	TTL	GPIO port C bit 5.
PC6	M2	I/O	TTL	GPIO port C bit 6.
PC7	L2	I/O	TTL	GPIO port C bit 7.
PD0	G1	I/O	TTL	GPIO port D bit 0.
PD1	G2	I/O	TTL	GPIO port D bit 1.
PD2	H2	I/O	TTL	GPIO port D bit 2.
PD3	H1	I/O	TTL	GPIO port D bit 3.
PD4	E1	I/O	TTL	GPIO port D bit 4.
PD5	E2	I/O	TTL	GPIO port D bit 5.
PD6	F2	I/O	TTL	GPIO port D bit 6.
PD7	F1	I/O	TTL	GPIO port D bit 7.
PE0	A11	I/O	TTL	GPIO port E bit 0.
PE1	B12	I/O	TTL	GPIO port E bit 1.
PE2	B11	I/O	TTL	GPIO port E bit 2.
PE3	A12	I/O	TTL	GPIO port E bit 3.
PE4	D1	I/O	TTL	GPIO port E bit 4.
PE5	D2	I/O	TTL	GPIO port E bit 5.
PE6	C2	I/O	TTL	GPIO port E bit 6.
PE7	C1	I/O	TTL	GPIO port E bit 7.
PF0	M9	I/O	TTL	GPIO port F bit 0.
PF1	H12	I/O	TTL	GPIO port F bit 1.
PF2	J11	I/O	TTL	GPIO port F bit 2.
PF3	J12	I/O	TTL	GPIO port F bit 3.
PF4	L9	I/O	TTL	GPIO port F bit 4.
PF5	L8	I/O	TTL	GPIO port F bit 5.
PF6	M8	I/O	TTL	GPIO port F bit 6.
PF7	K4	I/O	TTL	GPIO port F bit 7.

Table 8-5. GPIO Signals (108BGA) ***(continued)***

Pin Name	Pin Number	Pin Type	Buffer Type[a]	Description
PG0	K1	I/O	TTL	GPIO port G bit 0.
PG1	K2	I/O	TTL	GPIO port G bit 1.
PG2	J1	I/O	TTL	GPIO port G bit 2.
PG3	J2	I/O	TTL	GPIO port G bit 3.
PG4	K3	I/O	TTL	GPIO port G bit 4.
PG5	M7	I/O	TTL	GPIO port G bit 5.
PG6	L7	I/O	TTL	GPIO port G bit 6.
PG7	C10	I/O	TTL	GPIO port G bit 7.
PH0	C9	I/O	TTL	GPIO port H bit 0.
PH1	C8	I/O	TTL	GPIO port H bit 1.
PH2	D11	I/O	TTL	GPIO port H bit 2.
PH3	D10	I/O	TTL	GPIO port H bit 3.

a. The TTL designation indicates the pin has TTL-compatible voltage levels.

8.2 Functional Description

Important: All GPIO pins are tri-stated by default (**GPIOAFSEL**=0, **GPIODEN**=0, **GPIOPDR**=0, and **GPIOPUR**=0), with the exception of the five JTAG/SWD pins (PB7 and PC[3:0]). The JTAG/SWD pins default to their JTAG/SWD functionality (**GPIOAFSEL**=1, **GPIODEN=1** and **GPIOPUR**=1). A Power-On-Reset ($\overline{\text{POR}}$) or asserting $\overline{\text{RST}}$ puts both groups of pins back to their default state.

While debugging systems where PB7 is being used as a GPIO, care must be taken to ensure that a low value is not applied to the pin when the part is reset. Because PB7 reverts to the $\overline{\text{TRST}}$ function after reset, a Low value on the pin causes the JTAG controller to be reset, resulting in a loss of JTAG communication.

Each GPIO port is a separate hardware instantiation of the same physical block (see Figure 8-1 on page 286). The LM3S2911 microcontroller contains eight ports and thus eight of these physical GPIO blocks.

Figure 8-1. GPIO Port Block Diagram

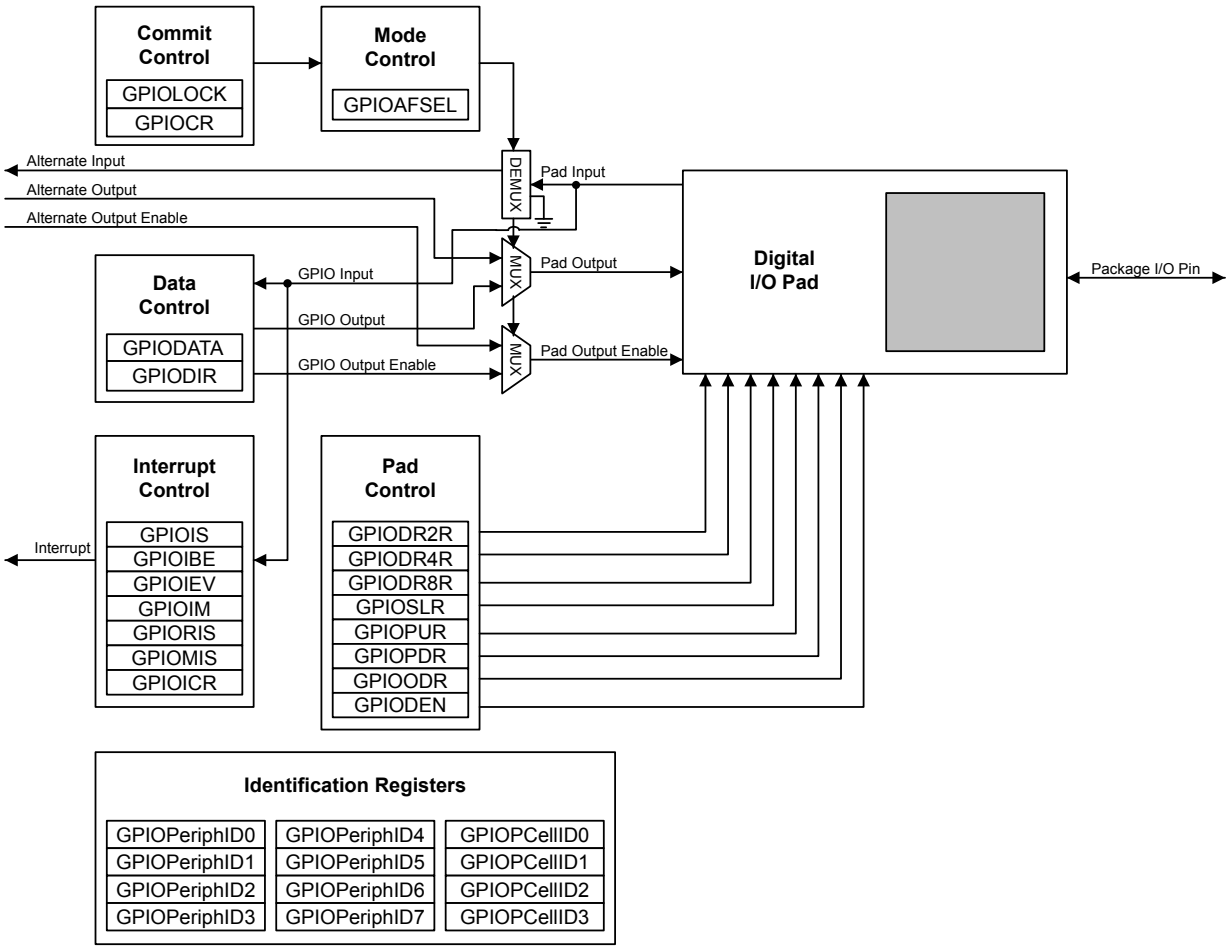

8.2.1 Data Control

The data control registers allow software to configure the operational modes of the GPIOs. The data direction register configures the GPIO as an input or an output while the data register either captures incoming data or drives it out to the pads.

8.2.1.1 Data Direction Operation

The **GPIO Direction (GPIODIR)** register (see page 293) is used to configure each individual pin as an input or output. When the data direction bit is set to 0, the GPIO is configured as an input and the corresponding data register bit will capture and store the value on the GPIO port. When the data direction bit is set to 1, the GPIO is configured as an output and the corresponding data register bit will be driven out on the GPIO port.

8.2.1.2 Data Register Operation

To aid in the efficiency of software, the GPIO ports allow for the modification of individual bits in the **GPIO Data (GPIODATA)** register (see page 292) by using bits [9:2] of the address bus as a mask. This allows software drivers to modify individual GPIO pins in a single instruction, without affecting the state of the other pins. This is in contrast to the "typical" method of doing a read-modify-write operation to set or clear an individual GPIO pin. To accommodate this feature, the **GPIODATA** register covers 256 locations in the memory map.

During a write, if the address bit associated with that data bit is set to 1, the value of the **GPIODATA** register is altered. If it is cleared to 0, it is left unchanged.

For example, writing a value of 0xEB to the address GPIODATA + 0x098 would yield as shown in Figure 8-2 on page 287, where u is data unchanged by the write.

Figure 8-2. GPIODATA Write Example

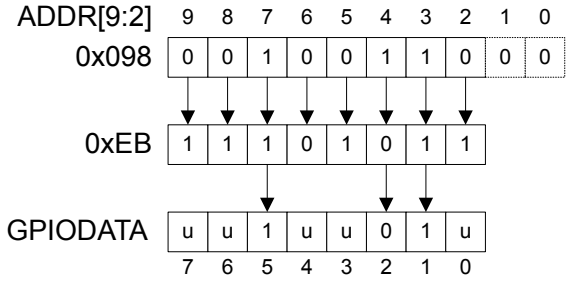

During a read, if the address bit associated with the data bit is set to 1, the value is read. If the address bit associated with the data bit is set to 0, it is read as a zero, regardless of its actual value. For example, reading address GPIODATA + 0x0C4 yields as shown in Figure 8-3 on page 287.

Figure 8-3. GPIODATA Read Example

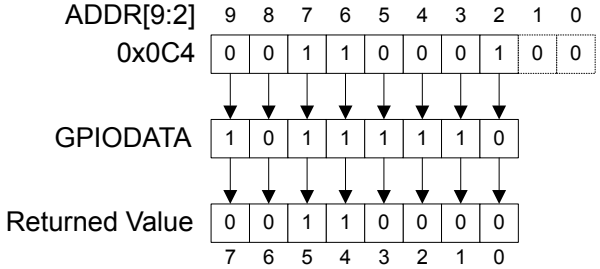

8.2.2 Interrupt Control

The interrupt capabilities of each GPIO port are controlled by a set of seven registers. With these registers, it is possible to select the source of the interrupt, its polarity, and the edge properties. When one or more GPIO inputs cause an interrupt, a single interrupt output is sent to the interrupt controller for the entire GPIO port. For edge-triggered interrupts, software must clear the interrupt to enable any further interrupts. For a level-sensitive interrupt, it is assumed that the external source holds the level constant for the interrupt to be recognized by the controller.

Three registers are required to define the edge or sense that causes interrupts:

- **GPIO Interrupt Sense (GPIOIS)** register (see page 294)
- **GPIO Interrupt Both Edges (GPIOIBE)** register (see page 295)
- **GPIO Interrupt Event (GPIOIEV)** register (see page 296)

Interrupts are enabled/disabled via the **GPIO Interrupt Mask (GPIOIM)** register (see page 297).

When an interrupt condition occurs, the state of the interrupt signal can be viewed in two locations: the **GPIO Raw Interrupt Status (GPIORIS)** and **GPIO Masked Interrupt Status (GPIOMIS)** registers (see page 298 and page 299). As the name implies, the **GPIOMIS** register only shows interrupt

conditions that are allowed to be passed to the controller. The **GPIORIS** register indicates that a GPIO pin meets the conditions for an interrupt, but has not necessarily been sent to the controller.

Interrupts are cleared by writing a 1 to the appropriate bit of the **GPIO Interrupt Clear (GPIOICR)** register (see page 300).

When programming the following interrupt control registers, the interrupts should be masked (**GPIOIM** set to 0). Writing any value to an interrupt control register (**GPIOIS**, **GPIOIBE**, or **GPIOIEV**) can generate a spurious interrupt if the corresponding bits are enabled.

8.2.3 Mode Control

The GPIO pins can be controlled by either hardware or software. When hardware control is enabled via the **GPIO Alternate Function Select (GPIOAFSEL)** register (see page 301), the pin state is controlled by its alternate function (that is, the peripheral). Software control corresponds to GPIO mode, where the **GPIODATA** register is used to read/write the corresponding pins.

8.2.4 Commit Control

The GPIO commit control registers provide a layer of protection against accidental programming of critical hardware peripherals. Protection is currently provided for the five JTAG/SWD pins (`PB7` and `PC[3:0]`). Writes to protected bits of the **GPIO Alternate Function Select (GPIOAFSEL)** register (see page 301) are not committed to storage unless the **GPIO Lock (GPIOLOCK)** register (see page 311) has been unlocked and the appropriate bits of the **GPIO Commit (GPIOCR)** register (see page 312) have been set to 1.

8.2.5 Pad Control

The pad control registers allow for GPIO pad configuration by software based on the application requirements. The pad control registers include the **GPIODR2R**, **GPIODR4R**, **GPIODR8R**, **GPIOODR**, **GPIOPUR**, **GPIOPDR**, **GPIOSLR**, and **GPIODEN** registers. These registers control drive strength, open-drain configuration, pull-up and pull-down resistors, slew-rate control and digital enable.

For special high-current applications, the GPIO output buffers may be used with the following restrictions. With the GPIO pins configured as 8-mA output drivers, a total of four GPIO outputs may be used to sink current loads up to 18 mA each. At 18-mA sink current loading, the V_{OL} value is specified as 1.2 V. The high-current GPIO package pins must be selected such that there are only a maximum of two per side of the physical package or BGA pin group with the total number of high-current GPIO outputs not exceeding four for the entire package.

8.2.6 Identification

The identification registers configured at reset allow software to detect and identify the module as a GPIO block. The identification registers include the **GPIOPeriphID0**-**GPIOPeriphID7** registers as well as the **GPIOPCellID0**-**GPIOPCellID3** registers.

8.3 Initialization and Configuration

To use the GPIO, the peripheral clock must be enabled by setting the appropriate GPIO Port bit field (`GPIOn`) in the **RCGC2** register.

On reset, all GPIO pins (except for the five JTAG pins) are configured out of reset to be undriven (tristate): **GPIOAFSEL**=0, **GPIODEN**=0, **GPIOPDR**=0, and **GPIOPUR**=0. Table 8-6 on page 289 shows all possible configurations of the GPIO pads and the control register settings required to achieve them. Table 8-7 on page 289 shows how a rising edge interrupt would be configured for pin 2 of a GPIO port.

Table 8-6. GPIO Pad Configuration Examples

Configuration	GPIO Register Bit Value[a]									
	AFSEL	DIR	ODR	DEN	PUR	PDR	DR2R	DR4R	DR8R	SLR
Digital Input (GPIO)	0	0	0	1	?	?	X	X	X	X
Digital Output (GPIO)	0	1	0	1	?	?	?	?	?	?
Open Drain Output (GPIO)	0	1	1	1	X	X	?	?	?	?
Open Drain Input/Output (I^2C)	1	X	1	1	X	X	?	?	?	?
Digital Input (Timer CCP)	1	X	0	1	?	?	X	X	X	X
Digital Output (Timer PWM)	1	X	0	1	?	?	?	?	?	?
Digital Input/Output (SSI)	1	X	0	1	?	?	?	?	?	?
Digital Input/Output (UART)	1	X	0	1	?	?	?	?	?	?
Analog Input (Comparator)	0	0	0	0	0	0	X	X	X	X
Digital Output (Comparator)	1	X	0	1	?	?	?	?	?	?

a. X=Ignored (don't care bit)

?=Can be either 0 or 1, depending on the configuration

Table 8-7. GPIO Interrupt Configuration Example

Register	Desired Interrupt Event Trigger	Pin 2 Bit Value[a]							
		7	6	5	4	3	2	1	0
GPIOIS	0=edge 1=level	X	X	X	X	X	0	X	X
GPIOIBE	0=single edge 1=both edges	X	X	X	X	X	0	X	X
GPIOIEV	0=Low level, or negative edge 1=High level, or positive edge	X	X	X	X	X	1	X	X
GPIOIM	0=masked 1=not masked	0	0	0	0	0	1	0	0

a. X=Ignored (don't care bit)

8.4 Register Map

Table 8-8 on page 290 lists the GPIO registers. The offset listed is a hexadecimal increment to the register's address, relative to that GPIO port's base address:

- GPIO Port A: 0x4000.4000
- GPIO Port B: 0x4000.5000
- GPIO Port C: 0x4000.6000
- GPIO Port D: 0x4000.7000
- GPIO Port E: 0x4002.4000
- GPIO Port F: 0x4002.5000
- GPIO Port G: 0x4002.6000
- GPIO Port H: 0x4002.7000

Note that the GPIO module clock must be enabled before the registers can be programmed (see page 221). There must be a delay of 3 system clocks after the GPIO module clock is enabled before any GPIO module registers are accessed.

Important: The GPIO registers in this chapter are duplicated in each GPIO block; however, depending on the block, all eight bits may not be connected to a GPIO pad. In those cases, writing to those unconnected bits has no effect, and reading those unconnected bits returns no meaningful data.

Note: The default reset value for the **GPIOAFSEL**, **GPIOPUR**, and **GPIODEN** registers are 0x0000.0000 for all GPIO pins, with the exception of the five JTAG/SWD pins (`PB7` and `PC[3:0]`). These five pins default to JTAG/SWD functionality. Because of this, the default reset value of these registers for GPIO Port B is 0x0000.0080 while the default reset value for Port C is 0x0000.000F.

The default register type for the **GPIOCR** register is RO for all GPIO pins with the exception of the five JTAG/SWD pins (`PB7` and `PC[3:0]`). These five pins are currently the only GPIOs that are protected by the **GPIOCR** register. Because of this, the register type for GPIO Port B7 and GPIO Port C[3:0] is R/W.

The default reset value for the **GPIOCR** register is 0x0000.00FF for all GPIO pins, with the exception of the five JTAG/SWD pins (`PB7` and `PC[3:0]`). To ensure that the JTAG port is not accidentally programmed as a GPIO, these five pins default to non-committable. Because of this, the default reset value of **GPIOCR** for GPIO Port B is 0x0000.007F while the default reset value of GPIOCR for Port C is 0x0000.00F0.

Table 8-8. GPIO Register Map

Offset	Name	Type	Reset	Description	See page
0x000	GPIODATA	R/W	0x0000.0000	GPIO Data	292
0x400	GPIODIR	R/W	0x0000.0000	GPIO Direction	293
0x404	GPIOIS	R/W	0x0000.0000	GPIO Interrupt Sense	294
0x408	GPIOIBE	R/W	0x0000.0000	GPIO Interrupt Both Edges	295
0x40C	GPIOIEV	R/W	0x0000.0000	GPIO Interrupt Event	296
0x410	GPIOIM	R/W	0x0000.0000	GPIO Interrupt Mask	297
0x414	GPIORIS	RO	0x0000.0000	GPIO Raw Interrupt Status	298
0x418	GPIOMIS	RO	0x0000.0000	GPIO Masked Interrupt Status	299
0x41C	GPIOICR	W1C	0x0000.0000	GPIO Interrupt Clear	300
0x420	GPIOAFSEL	R/W	-	GPIO Alternate Function Select	301

Table 8-8. GPIO Register Map *(continued)*

Offset	Name	Type	Reset	Description	See page
0x500	GPIODR2R	R/W	0x0000.00FF	GPIO 2-mA Drive Select	303
0x504	GPIODR4R	R/W	0x0000.0000	GPIO 4-mA Drive Select	304
0x508	GPIODR8R	R/W	0x0000.0000	GPIO 8-mA Drive Select	305
0x50C	GPIOODR	R/W	0x0000.0000	GPIO Open Drain Select	306
0x510	GPIOPUR	R/W	-	GPIO Pull-Up Select	307
0x514	GPIOPDR	R/W	0x0000.0000	GPIO Pull-Down Select	308
0x518	GPIOSLR	R/W	0x0000.0000	GPIO Slew Rate Control Select	309
0x51C	GPIODEN	R/W	-	GPIO Digital Enable	310
0x520	GPIOLOCK	R/W	0x0000.0001	GPIO Lock	311
0x524	GPIOCR	-	-	GPIO Commit	312
0xFD0	GPIOPeriphID4	RO	0x0000.0000	GPIO Peripheral Identification 4	314
0xFD4	GPIOPeriphID5	RO	0x0000.0000	GPIO Peripheral Identification 5	315
0xFD8	GPIOPeriphID6	RO	0x0000.0000	GPIO Peripheral Identification 6	316
0xFDC	GPIOPeriphID7	RO	0x0000.0000	GPIO Peripheral Identification 7	317
0xFE0	GPIOPeriphID0	RO	0x0000.0061	GPIO Peripheral Identification 0	318
0xFE4	GPIOPeriphID1	RO	0x0000.0000	GPIO Peripheral Identification 1	319
0xFE8	GPIOPeriphID2	RO	0x0000.0018	GPIO Peripheral Identification 2	320
0xFEC	GPIOPeriphID3	RO	0x0000.0001	GPIO Peripheral Identification 3	321
0xFF0	GPIOPCellID0	RO	0x0000.000D	GPIO PrimeCell Identification 0	322
0xFF4	GPIOPCellID1	RO	0x0000.00F0	GPIO PrimeCell Identification 1	323
0xFF8	GPIOPCellID2	RO	0x0000.0005	GPIO PrimeCell Identification 2	324
0xFFC	GPIOPCellID3	RO	0x0000.00B1	GPIO PrimeCell Identification 3	325

8.5 Register Descriptions

The remainder of this section lists and describes the GPIO registers, in numerical order by address offset.

Register 1: GPIO Data (GPIODATA), offset 0x000

The **GPIODATA** register is the data register. In software control mode, values written in the **GPIODATA** register are transferred onto the GPIO port pins if the respective pins have been configured as outputs through the **GPIO Direction (GPIODIR)** register (see page 293).

In order to write to **GPIODATA**, the corresponding bits in the mask, resulting from the address bus bits [9:2], must be High. Otherwise, the bit values remain unchanged by the write.

Similarly, the values read from this register are determined for each bit by the mask bit derived from the address used to access the data register, bits [9:2]. Bits that are 1 in the address mask cause the corresponding bits in **GPIODATA** to be read, and bits that are 0 in the address mask cause the corresponding bits in **GPIODATA** to be read as 0, regardless of their value.

A read from **GPIODATA** returns the last bit value written if the respective pins are configured as outputs, or it returns the value on the corresponding input pin when these are configured as inputs. All bits are cleared by a reset.

GPIO Data (GPIODATA)

GPIO Port A base: 0x4000.4000
GPIO Port B base: 0x4000.5000
GPIO Port C base: 0x4000.6000
GPIO Port D base: 0x4000.7000
GPIO Port E base: 0x4002.4000
GPIO Port F base: 0x4002.5000
GPIO Port G base: 0x4002.6000
GPIO Port H base: 0x4002.7000
Offset 0x000
Type R/W, reset 0x0000.0000

	31	30	29	28	27	26	25	24	23	22	21	20	19	18	17	16
	reserved															
Type	RO	RO	RO	RO	RO	RO	RO	RO	RO	RO	RO	RO	RO	RO	RO	RO
Reset	0	0	0	0	0	0	0	0	0	0	0	0	0	0	0	0

	15	14	13	12	11	10	9	8	7	6	5	4	3	2	1	0
	reserved								DATA							
Type	RO	RO	RO	RO	RO	RO	RO	RO	R/W	R/W	R/W	R/W	R/W	R/W	R/W	R/W
Reset	0	0	0	0	0	0	0	0	0	0	0	0	0	0	0	0

Bit/Field	Name	Type	Reset	Description
31:8	reserved	RO	0x00	Software should not rely on the value of a reserved bit. To provide compatibility with future products, the value of a reserved bit should be preserved across a read-modify-write operation.
7:0	DATA	R/W	0x00	GPIO Data This register is virtually mapped to 256 locations in the address space. To facilitate the reading and writing of data to these registers by independent drivers, the data read from and the data written to the registers are masked by the eight address lines `ipaddr[9:2]`. Reads from this register return its current state. Writes to this register only affect bits that are not masked by `ipaddr[9:2]` and are configured as outputs. See “Data Register Operation” on page 286 for examples of reads and writes.

Register 2: GPIO Direction (GPIODIR), offset 0x400

The **GPIODIR** register is the data direction register. Bits set to 1 in the **GPIODIR** register configure the corresponding pin to be an output, while bits set to 0 configure the pins to be inputs. All bits are cleared by a reset, meaning all GPIO pins are inputs by default.

GPIO Direction (GPIODIR)

GPIO Port A base: 0x4000.4000
GPIO Port B base: 0x4000.5000
GPIO Port C base: 0x4000.6000
GPIO Port D base: 0x4000.7000
GPIO Port E base: 0x4002.4000
GPIO Port F base: 0x4002.5000
GPIO Port G base: 0x4002.6000
GPIO Port H base: 0x4002.7000
Offset 0x400
Type R/W, reset 0x0000.0000

	31	30	29	28	27	26	25	24	23	22	21	20	19	18	17	16
	reserved															
Type	RO	RO	RO	RO	RO	RO	RO	RO	RO	RO	RO	RO	RO	RO	RO	RO
Reset	0	0	0	0	0	0	0	0	0	0	0	0	0	0	0	0

	15	14	13	12	11	10	9	8	7	6	5	4	3	2	1	0
	reserved								DIR							
Type	RO	RO	RO	RO	RO	RO	RO	RO	R/W	R/W	R/W	R/W	R/W	R/W	R/W	R/W
Reset	0	0	0	0	0	0	0	0	0	0	0	0	0	0	0	0

Bit/Field	Name	Type	Reset	Description
31:8	reserved	RO	0x00	Software should not rely on the value of a reserved bit. To provide compatibility with future products, the value of a reserved bit should be preserved across a read-modify-write operation.
7:0	DIR	R/W	0x00	GPIO Data Direction The `DIR` values are defined as follows: Value Description 0 Pins are inputs. 1 Pins are outputs.

Register 3: GPIO Interrupt Sense (GPIOIS), offset 0x404

The **GPIOIS** register is the interrupt sense register. Bits set to 1 in **GPIOIS** configure the corresponding pins to detect levels, while bits set to 0 configure the pins to detect edges. All bits are cleared by a reset.

GPIO Interrupt Sense (GPIOIS)

GPIO Port A base: 0x4000.4000
GPIO Port B base: 0x4000.5000
GPIO Port C base: 0x4000.6000
GPIO Port D base: 0x4000.7000
GPIO Port E base: 0x4002.4000
GPIO Port F base: 0x4002.5000
GPIO Port G base: 0x4002.6000
GPIO Port H base: 0x4002.7000
Offset 0x404
Type R/W, reset 0x0000.0000

	31	30	29	28	27	26	25	24	23	22	21	20	19	18	17	16
	reserved															
Type	RO	RO	RO	RO	RO	RO	RO	RO	RO	RO	RO	RO	RO	RO	RO	RO
Reset	0	0	0	0	0	0	0	0	0	0	0	0	0	0	0	0

	15	14	13	12	11	10	9	8	7	6	5	4	3	2	1	0
	reserved								IS							
Type	RO	RO	RO	RO	RO	RO	RO	RO	R/W	R/W	R/W	R/W	R/W	R/W	R/W	R/W
Reset	0	0	0	0	0	0	0	0	0	0	0	0	0	0	0	0

Bit/Field	Name	Type	Reset	Description
31:8	reserved	RO	0x00	Software should not rely on the value of a reserved bit. To provide compatibility with future products, the value of a reserved bit should be preserved across a read-modify-write operation.
7:0	IS	R/W	0x00	GPIO Interrupt Sense The `IS` values are defined as follows: Value Description 0 Edge on corresponding pin is detected (edge-sensitive). 1 Level on corresponding pin is detected (level-sensitive).

Register 4: GPIO Interrupt Both Edges (GPIOIBE), offset 0x408

The **GPIOIBE** register is the interrupt both-edges register. When the corresponding bit in the **GPIO Interrupt Sense (GPIOIS)** register (see page 294) is set to detect edges, bits set to High in **GPIOIBE** configure the corresponding pin to detect both rising and falling edges, regardless of the corresponding bit in the **GPIO Interrupt Event (GPIOIEV)** register (see page 296). Clearing a bit configures the pin to be controlled by **GPIOIEV**. All bits are cleared by a reset.

GPIO Interrupt Both Edges (GPIOIBE)

GPIO Port A base: 0x4000.4000
GPIO Port B base: 0x4000.5000
GPIO Port C base: 0x4000.6000
GPIO Port D base: 0x4000.7000
GPIO Port E base: 0x4002.4000
GPIO Port F base: 0x4002.5000
GPIO Port G base: 0x4002.6000
GPIO Port H base: 0x4002.7000
Offset 0x408
Type R/W, reset 0x0000.0000

	31	30	29	28	27	26	25	24	23	22	21	20	19	18	17	16
	reserved															
Type	RO	RO	RO	RO	RO	RO	RO	RO	RO	RO	RO	RO	RO	RO	RO	RO
Reset	0	0	0	0	0	0	0	0	0	0	0	0	0	0	0	0

	15	14	13	12	11	10	9	8	7	6	5	4	3	2	1	0
	reserved								IBE							
Type	RO	RO	RO	RO	RO	RO	RO	RO	R/W	R/W	R/W	R/W	R/W	R/W	R/W	R/W
Reset	0	0	0	0	0	0	0	0	0	0	0	0	0	0	0	0

Bit/Field	Name	Type	Reset	Description
31:8	reserved	RO	0x00	Software should not rely on the value of a reserved bit. To provide compatibility with future products, the value of a reserved bit should be preserved across a read-modify-write operation.
7:0	IBE	R/W	0x00	GPIO Interrupt Both Edges The `IBE` values are defined as follows: Value Description 0 Interrupt generation is controlled by the **GPIO Interrupt Event (GPIOIEV)** register (see page 296). 1 Both edges on the corresponding pin trigger an interrupt. **Note:** Single edge is determined by the corresponding bit in **GPIOIEV**.

Register 5: GPIO Interrupt Event (GPIOIEV), offset 0x40C

The **GPIOIEV** register is the interrupt event register. Bits set to High in **GPIOIEV** configure the corresponding pin to detect rising edges or high levels, depending on the corresponding bit value in the **GPIO Interrupt Sense (GPIOIS)** register (see page 294). Clearing a bit configures the pin to detect falling edges or low levels, depending on the corresponding bit value in **GPIOIS**. All bits are cleared by a reset.

GPIO Interrupt Event (GPIOIEV)

GPIO Port A base: 0x4000.4000
GPIO Port B base: 0x4000.5000
GPIO Port C base: 0x4000.6000
GPIO Port D base: 0x4000.7000
GPIO Port E base: 0x4002.4000
GPIO Port F base: 0x4002.5000
GPIO Port G base: 0x4002.6000
GPIO Port H base: 0x4002.7000
Offset 0x40C
Type R/W, reset 0x0000.0000

	31	30	29	28	27	26	25	24	23	22	21	20	19	18	17	16
	reserved															
Type	RO	RO	RO	RO	RO	RO	RO	RO	RO	RO	RO	RO	RO	RO	RO	RO
Reset	0	0	0	0	0	0	0	0	0	0	0	0	0	0	0	0

	15	14	13	12	11	10	9	8	7	6	5	4	3	2	1	0
	reserved								IEV							
Type	RO	RO	RO	RO	RO	RO	RO	RO	R/W	R/W	R/W	R/W	R/W	R/W	R/W	R/W
Reset	0	0	0	0	0	0	0	0	0	0	0	0	0	0	0	0

Bit/Field	Name	Type	Reset	Description
31:8	reserved	RO	0x00	Software should not rely on the value of a reserved bit. To provide compatibility with future products, the value of a reserved bit should be preserved across a read-modify-write operation.
7:0	IEV	R/W	0x00	GPIO Interrupt Event The `IEV` values are defined as follows: Value Description 0 Falling edge or Low levels on corresponding pins trigger interrupts. 1 Rising edge or High levels on corresponding pins trigger interrupts.

Register 6: GPIO Interrupt Mask (GPIOIM), offset 0x410

The **GPIOIM** register is the interrupt mask register. Bits set to High in **GPIOIM** allow the corresponding pins to trigger their individual interrupts and the combined **GPIOINTR** line. Clearing a bit disables interrupt triggering on that pin. All bits are cleared by a reset.

GPIO Interrupt Mask (GPIOIM)

GPIO Port A base: 0x4000.4000
GPIO Port B base: 0x4000.5000
GPIO Port C base: 0x4000.6000
GPIO Port D base: 0x4000.7000
GPIO Port E base: 0x4002.4000
GPIO Port F base: 0x4002.5000
GPIO Port G base: 0x4002.6000
GPIO Port H base: 0x4002.7000
Offset 0x410
Type R/W, reset 0x0000.0000

	31	30	29	28	27	26	25	24	23	22	21	20	19	18	17	16
	reserved															
Type	RO	RO	RO	RO	RO	RO	RO	RO	RO	RO	RO	RO	RO	RO	RO	RO
Reset	0	0	0	0	0	0	0	0	0	0	0	0	0	0	0	0

	15	14	13	12	11	10	9	8	7	6	5	4	3	2	1	0
	reserved								IME							
Type	RO	RO	RO	RO	RO	RO	RO	RO	R/W	R/W	R/W	R/W	R/W	R/W	R/W	R/W
Reset	0	0	0	0	0	0	0	0	0	0	0	0	0	0	0	0

Bit/Field	Name	Type	Reset	Description
31:8	reserved	RO	0x00	Software should not rely on the value of a reserved bit. To provide compatibility with future products, the value of a reserved bit should be preserved across a read-modify-write operation.
7:0	IME	R/W	0x00	GPIO Interrupt Mask Enable The `IME` values are defined as follows: Value Description 0 Corresponding pin interrupt is masked. 1 Corresponding pin interrupt is not masked.

Register 7: GPIO Raw Interrupt Status (GPIORIS), offset 0x414

The **GPIORIS** register is the raw interrupt status register. Bits read High in **GPIORIS** reflect the status of interrupt trigger conditions detected (raw, prior to masking), indicating that all the requirements have been met, before they are finally allowed to trigger by the **GPIO Interrupt Mask (GPIOIM)** register (see page 297). Bits read as zero indicate that corresponding input pins have not initiated an interrupt. All bits are cleared by a reset.

GPIO Raw Interrupt Status (GPIORIS)

GPIO Port A base: 0x4000.4000
GPIO Port B base: 0x4000.5000
GPIO Port C base: 0x4000.6000
GPIO Port D base: 0x4000.7000
GPIO Port E base: 0x4002.4000
GPIO Port F base: 0x4002.5000
GPIO Port G base: 0x4002.6000
GPIO Port H base: 0x4002.7000
Offset 0x414
Type RO, reset 0x0000.0000

	31	30	29	28	27	26	25	24	23	22	21	20	19	18	17	16
	reserved															
Type	RO	RO	RO	RO	RO	RO	RO	RO	RO	RO	RO	RO	RO	RO	RO	RO
Reset	0	0	0	0	0	0	0	0	0	0	0	0	0	0	0	0

	15	14	13	12	11	10	9	8	7	6	5	4	3	2	1	0
	reserved								RIS							
Type	RO	RO	RO	RO	RO	RO	RO	RO	RO	RO	RO	RO	RO	RO	RO	RO
Reset	0	0	0	0	0	0	0	0	0	0	0	0	0	0	0	0

Bit/Field	Name	Type	Reset	Description
31:8	reserved	RO	0x00	Software should not rely on the value of a reserved bit. To provide compatibility with future products, the value of a reserved bit should be preserved across a read-modify-write operation.
7:0	RIS	RO	0x00	GPIO Interrupt Raw Status Reflects the status of interrupt trigger condition detection on pins (raw, prior to masking). The `RIS` values are defined as follows: Value Description 0 Corresponding pin interrupt requirements not met. 1 Corresponding pin interrupt has met requirements.

Register 8: GPIO Masked Interrupt Status (GPIOMIS), offset 0x418

The **GPIOMIS** register is the masked interrupt status register. Bits read High in **GPIOMIS** reflect the status of input lines triggering an interrupt. Bits read as Low indicate that either no interrupt has been generated, or the interrupt is masked.

GPIOMIS is the state of the interrupt after masking.

GPIO Masked Interrupt Status (GPIOMIS)

GPIO Port A base: 0x4000.4000
GPIO Port B base: 0x4000.5000
GPIO Port C base: 0x4000.6000
GPIO Port D base: 0x4000.7000
GPIO Port E base: 0x4002.4000
GPIO Port F base: 0x4002.5000
GPIO Port G base: 0x4002.6000
GPIO Port H base: 0x4002.7000
Offset 0x418
Type RO, reset 0x0000.0000

	31	30	29	28	27	26	25	24	23	22	21	20	19	18	17	16
	reserved															
Type	RO	RO	RO	RO	RO	RO	RO	RO	RO	RO	RO	RO	RO	RO	RO	RO
Reset	0	0	0	0	0	0	0	0	0	0	0	0	0	0	0	0

	15	14	13	12	11	10	9	8	7	6	5	4	3	2	1	0
	reserved								MIS							
Type	RO	RO	RO	RO	RO	RO	RO	RO	RO	RO	RO	RO	RO	RO	RO	RO
Reset	0	0	0	0	0	0	0	0	0	0	0	0	0	0	0	0

Bit/Field	Name	Type	Reset	Description
31:8	reserved	RO	0x00	Software should not rely on the value of a reserved bit. To provide compatibility with future products, the value of a reserved bit should be preserved across a read-modify-write operation.
7:0	MIS	RO	0x00	GPIO Masked Interrupt Status Masked value of interrupt due to corresponding pin. The `MIS` values are defined as follows: Value Description 0 Corresponding GPIO line interrupt not active. 1 Corresponding GPIO line asserting interrupt.

Register 9: GPIO Interrupt Clear (GPIOICR), offset 0x41C

The **GPIOICR** register is the interrupt clear register. Writing a 1 to a bit in this register clears the corresponding interrupt edge detection logic register. Writing a 0 has no effect.

GPIO Interrupt Clear (GPIOICR)

GPIO Port A base: 0x4000.4000
GPIO Port B base: 0x4000.5000
GPIO Port C base: 0x4000.6000
GPIO Port D base: 0x4000.7000
GPIO Port E base: 0x4002.4000
GPIO Port F base: 0x4002.5000
GPIO Port G base: 0x4002.6000
GPIO Port H base: 0x4002.7000
Offset 0x41C
Type W1C, reset 0x0000.0000

	31	30	29	28	27	26	25	24	23	22	21	20	19	18	17	16
	reserved															
Type	RO	RO	RO	RO	RO	RO	RO	RO	RO	RO	RO	RO	RO	RO	RO	RO
Reset	0	0	0	0	0	0	0	0	0	0	0	0	0	0	0	0

	15	14	13	12	11	10	9	8	7	6	5	4	3	2	1	0
	reserved								IC							
Type	RO	RO	RO	RO	RO	RO	RO	RO	W1C	W1C	W1C	W1C	W1C	W1C	W1C	W1C
Reset	0	0	0	0	0	0	0	0	0	0	0	0	0	0	0	0

Bit/Field	Name	Type	Reset	Description
31:8	reserved	RO	0x00	Software should not rely on the value of a reserved bit. To provide compatibility with future products, the value of a reserved bit should be preserved across a read-modify-write operation.
7:0	IC	W1C	0x00	GPIO Interrupt Clear The `IC` values are defined as follows: Value Description 0 Corresponding interrupt is unaffected. 1 Corresponding interrupt is cleared.

Register 10: GPIO Alternate Function Select (GPIOAFSEL), offset 0x420

The **GPIOAFSEL** register is the mode control select register. Writing a 1 to any bit in this register selects the hardware control for the corresponding GPIO line. All bits are cleared by a reset, therefore no GPIO line is set to hardware control by default.

The GPIO commit control registers provide a layer of protection against accidental programming of critical hardware peripherals. Protection is currently provided for the five JTAG/SWD pins (PB7 and PC[3:0]). Writes to protected bits of the **GPIO Alternate Function Select (GPIOAFSEL)** register (see page 301) are not committed to storage unless the **GPIO Lock (GPIOLOCK)** register (see page 311) has been unlocked and the appropriate bits of the **GPIO Commit (GPIOCR)** register (see page 312) have been set to 1.

Important: All GPIO pins are tri-stated by default (**GPIOAFSEL**=0, **GPIODEN**=0, **GPIOPDR**=0, and **GPIOPUR**=0), with the exception of the five JTAG/SWD pins (PB7 and PC[3:0]). The JTAG/SWD pins default to their JTAG/SWD functionality (**GPIOAFSEL**=1, **GPIODEN=1** and **GPIOPUR**=1). A Power-On-Reset ($\overline{\text{POR}}$) or asserting $\overline{\text{RST}}$ puts both groups of pins back to their default state.

While debugging systems where PB7 is being used as a GPIO, care must be taken to ensure that a low value is not applied to the pin when the part is reset. Because PB7 reverts to the $\overline{\text{TRST}}$ function after reset, a Low value on the pin causes the JTAG controller to be reset, resulting in a loss of JTAG communication.

Caution – It is possible to create a software sequence that prevents the debugger from connecting to the Stellaris® microcontroller. If the program code loaded into flash immediately changes the JTAG pins to their GPIO functionality, the debugger may not have enough time to connect and halt the controller before the JTAG pin functionality switches. This may lock the debugger out of the part. This can be avoided with a software routine that restores JTAG functionality based on an external or software trigger.

GPIO Alternate Function Select (GPIOAFSEL)

GPIO Port A base: 0x4000.4000
GPIO Port B base: 0x4000.5000
GPIO Port C base: 0x4000.6000
GPIO Port D base: 0x4000.7000
GPIO Port E base: 0x4002.4000
GPIO Port F base: 0x4002.5000
GPIO Port G base: 0x4002.6000
GPIO Port H base: 0x4002.7000
Offset 0x420
Type R/W, reset -

	31	30	29	28	27	26	25	24	23	22	21	20	19	18	17	16
	reserved															
Type	RO	RO	RO	RO	RO	RO	RO	RO	RO	RO	RO	RO	RO	RO	RO	RO
Reset	0	0	0	0	0	0	0	0	0	0	0	0	0	0	0	0

	15	14	13	12	11	10	9	8	7	6	5	4	3	2	1	0
	reserved								AFSEL							
Type	RO	RO	RO	RO	RO	RO	RO	RO	R/W	R/W	R/W	R/W	R/W	R/W	R/W	R/W
Reset	0	0	0	0	0	0	0	0	-	-	-	-	-	-	-	-

Bit/Field	Name	Type	Reset	Description
31:8	reserved	RO	0x00	Software should not rely on the value of a reserved bit. To provide compatibility with future products, the value of a reserved bit should be preserved across a read-modify-write operation.

Bit/Field	Name	Type	Reset	Description
7:0	AFSEL	R/W	-	GPIO Alternate Function Select The AFSEL values are defined as follows: Value Description 0 Software control of corresponding GPIO line (GPIO mode). 1 Hardware control of corresponding GPIO line (alternate hardware function). **Note:** The default reset value for the **GPIOAFSEL**, **GPIOPUR**, and **GPIODEN** registers are 0x0000.0000 for all GPIO pins, with the exception of the five JTAG/SWD pins (PB7 and PC[3:0]). These five pins default to JTAG/SWD functionality. Because of this, the default reset value of these registers for GPIO Port B is 0x0000.0080 while the default reset value for Port C is 0x0000.000F.

Register 11: GPIO 2-mA Drive Select (GPIODR2R), offset 0x500

The **GPIODR2R** register is the 2-mA drive control register. It allows for each GPIO signal in the port to be individually configured without affecting the other pads. When writing a DRV2 bit for a GPIO signal, the corresponding DRV4 bit in the **GPIODR4R** register and the DRV8 bit in the **GPIODR8R** register are automatically cleared by hardware.

GPIO 2-mA Drive Select (GPIODR2R)

GPIO Port A base: 0x4000.4000
GPIO Port B base: 0x4000.5000
GPIO Port C base: 0x4000.6000
GPIO Port D base: 0x4000.7000
GPIO Port E base: 0x4002.4000
GPIO Port F base: 0x4002.5000
GPIO Port G base: 0x4002.6000
GPIO Port H base: 0x4002.7000
Offset 0x500
Type R/W, reset 0x0000.00FF

	31	30	29	28	27	26	25	24	23	22	21	20	19	18	17	16
	reserved															
Type	RO	RO	RO	RO	RO	RO	RO	RO	RO	RO	RO	RO	RO	RO	RO	RO
Reset	0	0	0	0	0	0	0	0	0	0	0	0	0	0	0	0

	15	14	13	12	11	10	9	8	7	6	5	4	3	2	1	0
	reserved								DRV2							
Type	RO	RO	RO	RO	RO	RO	RO	RO	R/W	R/W	R/W	R/W	R/W	R/W	R/W	R/W
Reset	0	0	0	0	0	0	0	0	1	1	1	1	1	1	1	1

Bit/Field	Name	Type	Reset	Description
31:8	reserved	RO	0x00	Software should not rely on the value of a reserved bit. To provide compatibility with future products, the value of a reserved bit should be preserved across a read-modify-write operation.
7:0	DRV2	R/W	0xFF	Output Pad 2-mA Drive Enable A write of 1 to either **GPIODR4[n]** or **GPIODR8[n]** clears the corresponding 2-mA enable bit. The change is effective on the second clock cycle after the write.

Register 12: GPIO 4-mA Drive Select (GPIODR4R), offset 0x504

The **GPIODR4R** register is the 4-mA drive control register. It allows for each GPIO signal in the port to be individually configured without affecting the other pads. When writing the DRV4 bit for a GPIO signal, the corresponding DRV2 bit in the **GPIODR2R** register and the DRV8 bit in the **GPIODR8R** register are automatically cleared by hardware.

GPIO 4-mA Drive Select (GPIODR4R)

GPIO Port A base: 0x4000.4000
GPIO Port B base: 0x4000.5000
GPIO Port C base: 0x4000.6000
GPIO Port D base: 0x4000.7000
GPIO Port E base: 0x4002.4000
GPIO Port F base: 0x4002.5000
GPIO Port G base: 0x4002.6000
GPIO Port H base: 0x4002.7000
Offset 0x504
Type R/W, reset 0x0000.0000

	31	30	29	28	27	26	25	24	23	22	21	20	19	18	17	16
	reserved															
Type	RO	RO	RO	RO	RO	RO	RO	RO	RO	RO	RO	RO	RO	RO	RO	RO
Reset	0	0	0	0	0	0	0	0	0	0	0	0	0	0	0	0

	15	14	13	12	11	10	9	8	7	6	5	4	3	2	1	0
	reserved								DRV4							
Type	RO	RO	RO	RO	RO	RO	RO	RO	R/W	R/W	R/W	R/W	R/W	R/W	R/W	R/W
Reset	0	0	0	0	0	0	0	0	0	0	0	0	0	0	0	0

Bit/Field	Name	Type	Reset	Description
31:8	reserved	RO	0x00	Software should not rely on the value of a reserved bit. To provide compatibility with future products, the value of a reserved bit should be preserved across a read-modify-write operation.
7:0	DRV4	R/W	0x00	Output Pad 4-mA Drive Enable A write of 1 to either **GPIODR2[n]** or **GPIODR8[n]** clears the corresponding 4-mA enable bit. The change is effective on the second clock cycle after the write.

Register 13: GPIO 8-mA Drive Select (GPIODR8R), offset 0x508

The **GPIODR8R** register is the 8-mA drive control register. It allows for each GPIO signal in the port to be individually configured without affecting the other pads. When writing the DRV8 bit for a GPIO signal, the corresponding DRV2 bit in the **GPIODR2R** register and the DRV4 bit in the **GPIODR4R** register are automatically cleared by hardware.

GPIO 8-mA Drive Select (GPIODR8R)

GPIO Port A base: 0x4000.4000
GPIO Port B base: 0x4000.5000
GPIO Port C base: 0x4000.6000
GPIO Port D base: 0x4000.7000
GPIO Port E base: 0x4002.4000
GPIO Port F base: 0x4002.5000
GPIO Port G base: 0x4002.6000
GPIO Port H base: 0x4002.7000
Offset 0x508
Type R/W, reset 0x0000.0000

	31	30	29	28	27	26	25	24	23	22	21	20	19	18	17	16
	reserved															
Type	RO	RO	RO	RO	RO	RO	RO	RO	RO	RO	RO	RO	RO	RO	RO	RO
Reset	0	0	0	0	0	0	0	0	0	0	0	0	0	0	0	0

	15	14	13	12	11	10	9	8	7	6	5	4	3	2	1	0
	reserved								DRV8							
Type	RO	RO	RO	RO	RO	RO	RO	RO	R/W	R/W	R/W	R/W	R/W	R/W	R/W	R/W
Reset	0	0	0	0	0	0	0	0	0	0	0	0	0	0	0	0

Bit/Field	Name	Type	Reset	Description
31:8	reserved	RO	0x00	Software should not rely on the value of a reserved bit. To provide compatibility with future products, the value of a reserved bit should be preserved across a read-modify-write operation.
7:0	DRV8	R/W	0x00	Output Pad 8-mA Drive Enable A write of 1 to either **GPIODR2[n]** or **GPIODR4[n]** clears the corresponding 8-mA enable bit. The change is effective on the second clock cycle after the write.

Register 14: GPIO Open Drain Select (GPIOODR), offset 0x50C

The **GPIOODR** register is the open drain control register. Setting a bit in this register enables the open drain configuration of the corresponding GPIO pad. When open drain mode is enabled, the corresponding bit should also be set in the **GPIO Digital Enable (GPIODEN)** register (see page 310). Corresponding bits in the drive strength registers (**GPIODR2R**, **GPIODR4R**, **GPIODR8R**, and **GPIOSLR**) can be set to achieve the desired rise and fall times. The GPIO acts as an open-drain input if the corresponding bit in the **GPIODIR** register is cleared. If open drain is selected while the GPIO is configured as an input, the GPIO will remain an input and the open-drain selection has no effect until the GPIO is changed to an output.

When using the I^2C module, in addition to configuring the pin to open drain, the **GPIO Alternate Function Select (GPIOAFSEL)** register bits for the I^2C clock and data pins should be set to 1 (see examples in “Initialization and Configuration” on page 288).

GPIO Open Drain Select (GPIOODR)

GPIO Port A base: 0x4000.4000
GPIO Port B base: 0x4000.5000
GPIO Port C base: 0x4000.6000
GPIO Port D base: 0x4000.7000
GPIO Port E base: 0x4002.4000
GPIO Port F base: 0x4002.5000
GPIO Port G base: 0x4002.6000
GPIO Port H base: 0x4002.7000
Offset 0x50C
Type R/W, reset 0x0000.0000

	31	30	29	28	27	26	25	24	23	22	21	20	19	18	17	16
	reserved															
Type	RO	RO	RO	RO	RO	RO	RO	RO	RO	RO	RO	RO	RO	RO	RO	RO
Reset	0	0	0	0	0	0	0	0	0	0	0	0	0	0	0	0

	15	14	13	12	11	10	9	8	7	6	5	4	3	2	1	0
	reserved								ODE							
Type	RO	RO	RO	RO	RO	RO	RO	RO	R/W	R/W	R/W	R/W	R/W	R/W	R/W	R/W
Reset	0	0	0	0	0	0	0	0	0	0	0	0	0	0	0	0

Bit/Field	Name	Type	Reset	Description
31:8	reserved	RO	0x00	Software should not rely on the value of a reserved bit. To provide compatibility with future products, the value of a reserved bit should be preserved across a read-modify-write operation.
7:0	ODE	R/W	0x00	Output Pad Open Drain Enable The `ODE` values are defined as follows: Value Description 0 Open drain configuration is disabled. 1 Open drain configuration is enabled.

Register 15: GPIO Pull-Up Select (GPIOPUR), offset 0x510

The **GPIOPUR** register is the pull-up control register. When a bit is set to 1, it enables a weak pull-up resistor on the corresponding GPIO signal. Setting a bit in **GPIOPUR** automatically clears the corresponding bit in the **GPIO Pull-Down Select (GPIOPDR)** register (see page 308).

GPIO Pull-Up Select (GPIOPUR)

GPIO Port A base: 0x4000.4000
GPIO Port B base: 0x4000.5000
GPIO Port C base: 0x4000.6000
GPIO Port D base: 0x4000.7000
GPIO Port E base: 0x4002.4000
GPIO Port F base: 0x4002.5000
GPIO Port G base: 0x4002.6000
GPIO Port H base: 0x4002.7000
Offset 0x510
Type R/W, reset -

	31	30	29	28	27	26	25	24	23	22	21	20	19	18	17	16
	reserved															
Type	RO	RO	RO	RO	RO	RO	RO	RO	RO	RO	RO	RO	RO	RO	RO	RO
Reset	0	0	0	0	0	0	0	0	0	0	0	0	0	0	0	0

	15	14	13	12	11	10	9	8	7	6	5	4	3	2	1	0
	reserved								PUE							
Type	RO	RO	RO	RO	RO	RO	RO	RO	R/W	R/W	R/W	R/W	R/W	R/W	R/W	R/W
Reset	0	0	0	0	0	0	0	0	-	-	-	-	-	-	-	-

Bit/Field	Name	Type	Reset	Description
31:8	reserved	RO	0x00	Software should not rely on the value of a reserved bit. To provide compatibility with future products, the value of a reserved bit should be preserved across a read-modify-write operation.
7:0	PUE	R/W	-	Pad Weak Pull-Up Enable A write of 1 to **GPIOPDR[n]** clears the corresponding **GPIOPUR[n]** enables. The change is effective on the second clock cycle after the write. **Note:** The default reset value for the **GPIOAFSEL**, **GPIOPUR**, and **GPIODEN** registers are 0x0000.0000 for all GPIO pins, with the exception of the five JTAG/SWD pins (`PB7` and `PC[3:0]`). These five pins default to JTAG/SWD functionality. Because of this, the default reset value of these registers for GPIO Port B is 0x0000.0080 while the default reset value for Port C is 0x0000.000F.

Register 16: GPIO Pull-Down Select (GPIOPDR), offset 0x514

The **GPIOPDR** register is the pull-down control register. When a bit is set to 1, it enables a weak pull-down resistor on the corresponding GPIO signal. Setting a bit in **GPIOPDR** automatically clears the corresponding bit in the **GPIO Pull-Up Select (GPIOPUR)** register (see page 307).

GPIO Pull-Down Select (GPIOPDR)

GPIO Port A base: 0x4000.4000
GPIO Port B base: 0x4000.5000
GPIO Port C base: 0x4000.6000
GPIO Port D base: 0x4000.7000
GPIO Port E base: 0x4002.4000
GPIO Port F base: 0x4002.5000
GPIO Port G base: 0x4002.6000
GPIO Port H base: 0x4002.7000
Offset 0x514
Type R/W, reset 0x0000.0000

	31	30	29	28	27	26	25	24	23	22	21	20	19	18	17	16
	reserved															
Type	RO	RO	RO	RO	RO	RO	RO	RO	RO	RO	RO	RO	RO	RO	RO	RO
Reset	0	0	0	0	0	0	0	0	0	0	0	0	0	0	0	0

	15	14	13	12	11	10	9	8	7	6	5	4	3	2	1	0
	reserved								PDE							
Type	RO	RO	RO	RO	RO	RO	RO	RO	R/W	R/W	R/W	R/W	R/W	R/W	R/W	R/W
Reset	0	0	0	0	0	0	0	0	0	0	0	0	0	0	0	0

Bit/Field	Name	Type	Reset	Description
31:8	reserved	RO	0x00	Software should not rely on the value of a reserved bit. To provide compatibility with future products, the value of a reserved bit should be preserved across a read-modify-write operation.
7:0	PDE	R/W	0x00	Pad Weak Pull-Down Enable A write of 1 to **GPIOPUR[n]** clears the corresponding **GPIOPDR[n]** enables. The change is effective on the second clock cycle after the write.

Register 17: GPIO Slew Rate Control Select (GPIOSLR), offset 0x518

The **GPIOSLR** register is the slew rate control register. Slew rate control is only available when using the 8-mA drive strength option via the **GPIO 8-mA Drive Select (GPIODR8R)** register (see page 305).

GPIO Slew Rate Control Select (GPIOSLR)

GPIO Port A base: 0x4000.4000
GPIO Port B base: 0x4000.5000
GPIO Port C base: 0x4000.6000
GPIO Port D base: 0x4000.7000
GPIO Port E base: 0x4002.4000
GPIO Port F base: 0x4002.5000
GPIO Port G base: 0x4002.6000
GPIO Port H base: 0x4002.7000
Offset 0x518
Type R/W, reset 0x0000.0000

	31	30	29	28	27	26	25	24	23	22	21	20	19	18	17	16
	reserved															
Type	RO	RO	RO	RO	RO	RO	RO	RO	RO	RO	RO	RO	RO	RO	RO	RO
Reset	0	0	0	0	0	0	0	0	0	0	0	0	0	0	0	0

	15	14	13	12	11	10	9	8	7	6	5	4	3	2	1	0
	reserved								SRL							
Type	RO	RO	RO	RO	RO	RO	RO	RO	R/W	R/W	R/W	R/W	R/W	R/W	R/W	R/W
Reset	0	0	0	0	0	0	0	0	0	0	0	0	0	0	0	0

Bit/Field	Name	Type	Reset	Description
31:8	reserved	RO	0x00	Software should not rely on the value of a reserved bit. To provide compatibility with future products, the value of a reserved bit should be preserved across a read-modify-write operation.
7:0	SRL	R/W	0x00	Slew Rate Limit Enable (8-mA drive only) The SRL values are defined as follows: Value Description 0 Slew rate control disabled. 1 Slew rate control enabled.

Register 18: GPIO Digital Enable (GPIODEN), offset 0x51C

Note: Pins configured as digital inputs are Schmitt-triggered.

The **GPIODEN** register is the digital enable register. By default, with the exception of the GPIO signals used for JTAG/SWD function, all other GPIO signals are configured out of reset to be undriven (tristate). Their digital function is disabled; they do not drive a logic value on the pin and they do not allow the pin voltage into the GPIO receiver. To use the pin in a digital function (either GPIO or alternate function), the corresponding `GPIODEN` bit must be set.

GPIO Digital Enable (GPIODEN)

GPIO Port A base: 0x4000.4000
GPIO Port B base: 0x4000.5000
GPIO Port C base: 0x4000.6000
GPIO Port D base: 0x4000.7000
GPIO Port E base: 0x4002.4000
GPIO Port F base: 0x4002.5000
GPIO Port G base: 0x4002.6000
GPIO Port H base: 0x4002.7000
Offset 0x51C
Type R/W, reset -

	31	30	29	28	27	26	25	24	23	22	21	20	19	18	17	16
	reserved															
Type	RO	RO	RO	RO	RO	RO	RO	RO	RO	RO	RO	RO	RO	RO	RO	RO
Reset	0	0	0	0	0	0	0	0	0	0	0	0	0	0	0	0

	15	14	13	12	11	10	9	8	7	6	5	4	3	2	1	0
	reserved								DEN							
Type	RO	RO	RO	RO	RO	RO	RO	RO	R/W	R/W	R/W	R/W	R/W	R/W	R/W	R/W
Reset	0	0	0	0	0	0	0	0	-	-	-	-	-	-	-	-

Bit/Field	Name	Type	Reset	Description
31:8	reserved	RO	0x00	Software should not rely on the value of a reserved bit. To provide compatibility with future products, the value of a reserved bit should be preserved across a read-modify-write operation.
7:0	DEN	R/W	-	Digital Enable The `DEN` values are defined as follows: Value Description 0 Digital functions disabled. 1 Digital functions enabled. **Note:** The default reset value for the **GPIOAFSEL**, **GPIOPUR**, and **GPIODEN** registers are 0x0000.0000 for all GPIO pins, with the exception of the five JTAG/SWD pins (`PB7` and `PC[3:0]`). These five pins default to JTAG/SWD functionality. Because of this, the default reset value of these registers for GPIO Port B is 0x0000.0080 while the default reset value for Port C is 0x0000.000F.

Register 19: GPIO Lock (GPIOLOCK), offset 0x520

The **GPIOLOCK** register enables write access to the **GPIOCR** register (see page 312). Writing 0x1ACC.E551 to the **GPIOLOCK** register will unlock the **GPIOCR** register. Writing any other value to the **GPIOLOCK** register re-enables the locked state. Reading the **GPIOLOCK** register returns the lock status rather than the 32-bit value that was previously written. Therefore, when write accesses are disabled, or locked, reading the **GPIOLOCK** register returns 0x00000001. When write accesses are enabled, or unlocked, reading the **GPIOLOCK** register returns 0x00000000.

GPIO Lock (GPIOLOCK)

GPIO Port A base: 0x4000.4000
GPIO Port B base: 0x4000.5000
GPIO Port C base: 0x4000.6000
GPIO Port D base: 0x4000.7000
GPIO Port E base: 0x4002.4000
GPIO Port F base: 0x4002.5000
GPIO Port G base: 0x4002.6000
GPIO Port H base: 0x4002.7000
Offset 0x520
Type R/W, reset 0x0000.0001

	31	30	29	28	27	26	25	24	23	22	21	20	19	18	17	16
	LOCK															
Type	R/W	R/W	R/W	R/W	R/W	R/W	R/W	R/W	R/W	R/W	R/W	R/W	R/W	R/W	R/W	R/W
Reset	0	0	0	0	0	0	0	0	0	0	0	0	0	0	0	0

	15	14	13	12	11	10	9	8	7	6	5	4	3	2	1	0
	LOCK															
Type	R/W	R/W	R/W	R/W	R/W	R/W	R/W	R/W	R/W	R/W	R/W	R/W	R/W	R/W	R/W	R/W
Reset	0	0	0	0	0	0	0	0	0	0	0	0	0	0	0	1

Bit/Field	Name	Type	Reset	Description
31:0	LOCK	R/W	0x0000.0001	GPIO Lock A write of the value 0x1ACC.E551 unlocks the **GPIO Commit (GPIOCR)** register for write access. A write of any other value or a write to the **GPIOCR** register reapplies the lock, preventing any register updates. A read of this register returns the following values: Value — Description 0x0000.0001 — Locked 0x0000.0000 — Unlocked

Register 20: GPIO Commit (GPIOCR), offset 0x524

The **GPIOCR** register is the commit register. The value of the **GPIOCR** register determines which bits of the **GPIOAFSEL** register are committed when a write to the **GPIOAFSEL** register is performed. If a bit in the **GPIOCR** register is a zero, the data being written to the corresponding bit in the **GPIOAFSEL** register will not be committed and will retain its previous value. If a bit in the **GPIOCR** register is a one, the data being written to the corresponding bit of the **GPIOAFSEL** register will be committed to the register and will reflect the new value.

The contents of the **GPIOCR** register can only be modified if the **GPIOLOCK** register is unlocked. Writes to the **`GPIOCR`** register are ignored if the **GPIOLOCK** register is locked.

Important: This register is designed to prevent accidental programming of the registers that control connectivity to the JTAG/SWD debug hardware. By initializing the bits of the **GPIOCR** register to 0 for `PB7` and `PC[3:0]`, the JTAG/SWD debug port can only be converted to GPIOs through a deliberate set of writes to the **GPIOLOCK**, **GPIOCR**, and the corresponding registers.

Because this protection is currently only implemented on the JTAG/SWD pins on `PB7` and `PC[3:0]`, all of the other bits in the **GPIOCR** registers cannot be written with 0x0. These bits are hardwired to 0x1, ensuring that it is always possible to commit new values to the **GPIOAFSEL**register bits of these other pins.

GPIO Commit (GPIOCR)

GPIO Port A base: 0x4000.4000
GPIO Port B base: 0x4000.5000
GPIO Port C base: 0x4000.6000
GPIO Port D base: 0x4000.7000
GPIO Port E base: 0x4002.4000
GPIO Port F base: 0x4002.5000
GPIO Port G base: 0x4002.6000
GPIO Port H base: 0x4002.7000
Offset 0x524
Type -, reset -

	31	30	29	28	27	26	25	24	23	22	21	20	19	18	17	16
	reserved															
Type	RO	RO	RO	RO	RO	RO	RO	RO	RO	RO	RO	RO	RO	RO	RO	RO
Reset	0	0	0	0	0	0	0	0	0	0	0	0	0	0	0	0

	15	14	13	12	11	10	9	8	7	6	5	4	3	2	1	0
	reserved								CR							
Type	RO	RO	RO	RO	RO	RO	RO	RO	-	-	-	-	-	-	-	-
Reset	0	0	0	0	0	0	0	0	-	-	-	-	-	-	-	-

Bit/Field	Name	Type	Reset	Description
31:8	reserved	RO	0x00	Software should not rely on the value of a reserved bit. To provide compatibility with future products, the value of a reserved bit should be preserved across a read-modify-write operation.

Bit/Field	Name	Type	Reset	Description
7:0	CR	-	-	GPIO Commit On a bit-wise basis, any bit set allows the corresponding **GPIOAFSEL** bit to be set to its alternate function. **Note:** The default register type for the **GPIOCR** register is RO for all GPIO pins with the exception of the five JTAG/SWD pins (`PB7` and `PC[3:0]`). These five pins are currently the only GPIOs that are protected by the **GPIOCR** register. Because of this, the register type for GPIO Port B7 and GPIO Port C[3:0] is R/W. The default reset value for the **GPIOCR** register is 0x0000.00FF for all GPIO pins, with the exception of the five JTAG/SWD pins (`PB7` and `PC[3:0]`). To ensure that the JTAG port is not accidentally programmed as a GPIO, these five pins default to non-committable. Because of this, the default reset value of **GPIOCR** for GPIO Port B is 0x0000.007F while the default reset value of GPIOCR for Port C is 0x0000.00F0.

Register 21: GPIO Peripheral Identification 4 (GPIOPeriphID4), offset 0xFD0

The **GPIOPeriphID4**, **GPIOPeriphID5**, **GPIOPeriphID6**, and **GPIOPeriphID7** registers can conceptually be treated as one 32-bit register; each register contains eight bits of the 32-bit register, used by software to identify the peripheral.

GPIO Peripheral Identification 4 (GPIOPeriphID4)

GPIO Port A base: 0x4000.4000
GPIO Port B base: 0x4000.5000
GPIO Port C base: 0x4000.6000
GPIO Port D base: 0x4000.7000
GPIO Port E base: 0x4002.4000
GPIO Port F base: 0x4002.5000
GPIO Port G base: 0x4002.6000
GPIO Port H base: 0x4002.7000
Offset 0xFD0
Type RO, reset 0x0000.0000

	31	30	29	28	27	26	25	24	23	22	21	20	19	18	17	16
	reserved															
Type	RO	RO	RO	RO	RO	RO	RO	RO	RO	RO	RO	RO	RO	RO	RO	RO
Reset	0	0	0	0	0	0	0	0	0	0	0	0	0	0	0	0

	15	14	13	12	11	10	9	8	7	6	5	4	3	2	1	0
	reserved								PID4							
Type	RO	RO	RO	RO	RO	RO	RO	RO	RO	RO	RO	RO	RO	RO	RO	RO
Reset	0	0	0	0	0	0	0	0	0	0	0	0	0	0	0	0

Bit/Field	Name	Type	Reset	Description
31:8	reserved	RO	0x00	Software should not rely on the value of a reserved bit. To provide compatibility with future products, the value of a reserved bit should be preserved across a read-modify-write operation.
7:0	PID4	RO	0x00	GPIO Peripheral ID Register[7:0]

Register 22: GPIO Peripheral Identification 5 (GPIOPeriphID5), offset 0xFD4

The **GPIOPeriphID4**, **GPIOPeriphID5**, **GPIOPeriphID6**, and **GPIOPeriphID7** registers can conceptually be treated as one 32-bit register; each register contains eight bits of the 32-bit register, used by software to identify the peripheral.

GPIO Peripheral Identification 5 (GPIOPeriphID5)

GPIO Port A base: 0x4000.4000
GPIO Port B base: 0x4000.5000
GPIO Port C base: 0x4000.6000
GPIO Port D base: 0x4000.7000
GPIO Port E base: 0x4002.4000
GPIO Port F base: 0x4002.5000
GPIO Port G base: 0x4002.6000
GPIO Port H base: 0x4002.7000
Offset 0xFD4
Type RO, reset 0x0000.0000

	31	30	29	28	27	26	25	24	23	22	21	20	19	18	17	16
	reserved															
Type	RO	RO	RO	RO	RO	RO	RO	RO	RO	RO	RO	RO	RO	RO	RO	RO
Reset	0	0	0	0	0	0	0	0	0	0	0	0	0	0	0	0

	15	14	13	12	11	10	9	8	7	6	5	4	3	2	1	0
	reserved								PID5							
Type	RO	RO	RO	RO	RO	RO	RO	RO	RO	RO	RO	RO	RO	RO	RO	RO
Reset	0	0	0	0	0	0	0	0	0	0	0	0	0	0	0	0

Bit/Field	Name	Type	Reset	Description
31:8	reserved	RO	0x00	Software should not rely on the value of a reserved bit. To provide compatibility with future products, the value of a reserved bit should be preserved across a read-modify-write operation.
7:0	PID5	RO	0x00	GPIO Peripheral ID Register[15:8]

Register 23: GPIO Peripheral Identification 6 (GPIOPeriphID6), offset 0xFD8

The **GPIOPeriphID4**, **GPIOPeriphID5**, **GPIOPeriphID6**, and **GPIOPeriphID7** registers can conceptually be treated as one 32-bit register; each register contains eight bits of the 32-bit register, used by software to identify the peripheral.

GPIO Peripheral Identification 6 (GPIOPeriphID6)

GPIO Port A base: 0x4000.4000
GPIO Port B base: 0x4000.5000
GPIO Port C base: 0x4000.6000
GPIO Port D base: 0x4000.7000
GPIO Port E base: 0x4002.4000
GPIO Port F base: 0x4002.5000
GPIO Port G base: 0x4002.6000
GPIO Port H base: 0x4002.7000
Offset 0xFD8
Type RO, reset 0x0000.0000

	31	30	29	28	27	26	25	24	23	22	21	20	19	18	17	16
	reserved															
Type	RO	RO	RO	RO	RO	RO	RO	RO	RO	RO	RO	RO	RO	RO	RO	RO
Reset	0	0	0	0	0	0	0	0	0	0	0	0	0	0	0	0

	15	14	13	12	11	10	9	8	7	6	5	4	3	2	1	0
	reserved								PID6							
Type	RO	RO	RO	RO	RO	RO	RO	RO	RO	RO	RO	RO	RO	RO	RO	RO
Reset	0	0	0	0	0	0	0	0	0	0	0	0	0	0	0	0

Bit/Field	Name	Type	Reset	Description
31:8	reserved	RO	0x00	Software should not rely on the value of a reserved bit. To provide compatibility with future products, the value of a reserved bit should be preserved across a read-modify-write operation.
7:0	PID6	RO	0x00	GPIO Peripheral ID Register[23:16]

Register 24: GPIO Peripheral Identification 7 (GPIOPeriphID7), offset 0xFDC

The **GPIOPeriphID4**, **GPIOPeriphID5**, **GPIOPeriphID6**, and **GPIOPeriphID7** registers can conceptually be treated as one 32-bit register; each register contains eight bits of the 32-bit register, used by software to identify the peripheral.

GPIO Peripheral Identification 7 (GPIOPeriphID7)

GPIO Port A base: 0x4000.4000
GPIO Port B base: 0x4000.5000
GPIO Port C base: 0x4000.6000
GPIO Port D base: 0x4000.7000
GPIO Port E base: 0x4002.4000
GPIO Port F base: 0x4002.5000
GPIO Port G base: 0x4002.6000
GPIO Port H base: 0x4002.7000
Offset 0xFDC
Type RO, reset 0x0000.0000

	31	30	29	28	27	26	25	24	23	22	21	20	19	18	17	16
	reserved															
Type	RO	RO	RO	RO	RO	RO	RO	RO	RO	RO	RO	RO	RO	RO	RO	RO
Reset	0	0	0	0	0	0	0	0	0	0	0	0	0	0	0	0

	15	14	13	12	11	10	9	8	7	6	5	4	3	2	1	0
	reserved								PID7							
Type	RO	RO	RO	RO	RO	RO	RO	RO	RO	RO	RO	RO	RO	RO	RO	RO
Reset	0	0	0	0	0	0	0	0	0	0	0	0	0	0	0	0

Bit/Field	Name	Type	Reset	Description
31:8	reserved	RO	0x00	Software should not rely on the value of a reserved bit. To provide compatibility with future products, the value of a reserved bit should be preserved across a read-modify-write operation.
7:0	PID7	RO	0x00	GPIO Peripheral ID Register[31:24]

Register 25: GPIO Peripheral Identification 0 (GPIOPeriphID0), offset 0xFE0

The **GPIOPeriphID0**, **GPIOPeriphID1**, **GPIOPeriphID2**, and **GPIOPeriphID3** registers can conceptually be treated as one 32-bit register; each register contains eight bits of the 32-bit register, used by software to identify the peripheral.

GPIO Peripheral Identification 0 (GPIOPeriphID0)

GPIO Port A base: 0x4000.4000
GPIO Port B base: 0x4000.5000
GPIO Port C base: 0x4000.6000
GPIO Port D base: 0x4000.7000
GPIO Port E base: 0x4002.4000
GPIO Port F base: 0x4002.5000
GPIO Port G base: 0x4002.6000
GPIO Port H base: 0x4002.7000
Offset 0xFE0
Type RO, reset 0x0000.0061

	31	30	29	28	27	26	25	24	23	22	21	20	19	18	17	16
	reserved															
Type	RO	RO	RO	RO	RO	RO	RO	RO	RO	RO	RO	RO	RO	RO	RO	RO
Reset	0	0	0	0	0	0	0	0	0	0	0	0	0	0	0	0

	15	14	13	12	11	10	9	8	7	6	5	4	3	2	1	0
	reserved								PID0							
Type	RO	RO	RO	RO	RO	RO	RO	RO	RO	RO	RO	RO	RO	RO	RO	RO
Reset	0	0	0	0	0	0	0	0	0	1	1	0	0	0	0	1

Bit/Field	Name	Type	Reset	Description
31:8	reserved	RO	0x00	Software should not rely on the value of a reserved bit. To provide compatibility with future products, the value of a reserved bit should be preserved across a read-modify-write operation.
7:0	PID0	RO	0x61	GPIO Peripheral ID Register[7:0] Can be used by software to identify the presence of this peripheral.

Register 26: GPIO Peripheral Identification 1 (GPIOPeriphID1), offset 0xFE4

The **GPIOPeriphID0**, **GPIOPeriphID1**, **GPIOPeriphID2**, and **GPIOPeriphID3** registers can conceptually be treated as one 32-bit register; each register contains eight bits of the 32-bit register, used by software to identify the peripheral.

GPIO Peripheral Identification 1 (GPIOPeriphID1)

GPIO Port A base: 0x4000.4000
GPIO Port B base: 0x4000.5000
GPIO Port C base: 0x4000.6000
GPIO Port D base: 0x4000.7000
GPIO Port E base: 0x4002.4000
GPIO Port F base: 0x4002.5000
GPIO Port G base: 0x4002.6000
GPIO Port H base: 0x4002.7000
Offset 0xFE4
Type RO, reset 0x0000.0000

	31	30	29	28	27	26	25	24	23	22	21	20	19	18	17	16
	reserved															
Type	RO	RO	RO	RO	RO	RO	RO	RO	RO	RO	RO	RO	RO	RO	RO	RO
Reset	0	0	0	0	0	0	0	0	0	0	0	0	0	0	0	0

	15	14	13	12	11	10	9	8	7	6	5	4	3	2	1	0
	reserved								PID1							
Type	RO	RO	RO	RO	RO	RO	RO	RO	RO	RO	RO	RO	RO	RO	RO	RO
Reset	0	0	0	0	0	0	0	0	0	0	0	0	0	0	0	0

Bit/Field	Name	Type	Reset	Description
31:8	reserved	RO	0x00	Software should not rely on the value of a reserved bit. To provide compatibility with future products, the value of a reserved bit should be preserved across a read-modify-write operation.
7:0	PID1	RO	0x00	GPIO Peripheral ID Register[15:8] Can be used by software to identify the presence of this peripheral.

Register 27: GPIO Peripheral Identification 2 (GPIOPeriphID2), offset 0xFE8

The **GPIOPeriphID0**, **GPIOPeriphID1**, **GPIOPeriphID2**, and **GPIOPeriphID3** registers can conceptually be treated as one 32-bit register; each register contains eight bits of the 32-bit register, used by software to identify the peripheral.

GPIO Peripheral Identification 2 (GPIOPeriphID2)

GPIO Port A base: 0x4000.4000
GPIO Port B base: 0x4000.5000
GPIO Port C base: 0x4000.6000
GPIO Port D base: 0x4000.7000
GPIO Port E base: 0x4002.4000
GPIO Port F base: 0x4002.5000
GPIO Port G base: 0x4002.6000
GPIO Port H base: 0x4002.7000
Offset 0xFE8
Type RO, reset 0x0000.0018

	31	30	29	28	27	26	25	24	23	22	21	20	19	18	17	16
	reserved															
Type	RO	RO	RO	RO	RO	RO	RO	RO	RO	RO	RO	RO	RO	RO	RO	RO
Reset	0	0	0	0	0	0	0	0	0	0	0	0	0	0	0	0

	15	14	13	12	11	10	9	8	7	6	5	4	3	2	1	0
	reserved								PID2							
Type	RO	RO	RO	RO	RO	RO	RO	RO	RO	RO	RO	RO	RO	RO	RO	RO
Reset	0	0	0	0	0	0	0	0	0	0	0	1	1	0	0	0

Bit/Field	Name	Type	Reset	Description
31:8	reserved	RO	0x00	Software should not rely on the value of a reserved bit. To provide compatibility with future products, the value of a reserved bit should be preserved across a read-modify-write operation.
7:0	PID2	RO	0x18	GPIO Peripheral ID Register[23:16] Can be used by software to identify the presence of this peripheral.

Register 28: GPIO Peripheral Identification 3 (GPIOPeriphID3), offset 0xFEC

The **GPIOPeriphID0**, **GPIOPeriphID1**, **GPIOPeriphID2**, and **GPIOPeriphID3** registers can conceptually be treated as one 32-bit register; each register contains eight bits of the 32-bit register, used by software to identify the peripheral.

GPIO Peripheral Identification 3 (GPIOPeriphID3)

GPIO Port A base: 0x4000.4000
GPIO Port B base: 0x4000.5000
GPIO Port C base: 0x4000.6000
GPIO Port D base: 0x4000.7000
GPIO Port E base: 0x4002.4000
GPIO Port F base: 0x4002.5000
GPIO Port G base: 0x4002.6000
GPIO Port H base: 0x4002.7000
Offset 0xFEC
Type RO, reset 0x0000.0001

	31	30	29	28	27	26	25	24	23	22	21	20	19	18	17	16
	reserved															
Type	RO	RO	RO	RO	RO	RO	RO	RO	RO	RO	RO	RO	RO	RO	RO	RO
Reset	0	0	0	0	0	0	0	0	0	0	0	0	0	0	0	0

	15	14	13	12	11	10	9	8	7	6	5	4	3	2	1	0
	reserved								PID3							
Type	RO	RO	RO	RO	RO	RO	RO	RO	RO	RO	RO	RO	RO	RO	RO	RO
Reset	0	0	0	0	0	0	0	0	0	0	0	0	0	0	0	1

Bit/Field	Name	Type	Reset	Description
31:8	reserved	RO	0x00	Software should not rely on the value of a reserved bit. To provide compatibility with future products, the value of a reserved bit should be preserved across a read-modify-write operation.
7:0	PID3	RO	0x01	GPIO Peripheral ID Register[31:24] Can be used by software to identify the presence of this peripheral.

Register 29: GPIO PrimeCell Identification 0 (GPIOPCellID0), offset 0xFF0

The **GPIOPCellID0**, **GPIOPCellID1**, **GPIOPCellID2**, and **GPIOPCellID3** registers are four 8-bit wide registers, that can conceptually be treated as one 32-bit register. The register is used as a standard cross-peripheral identification system.

GPIO PrimeCell Identification 0 (GPIOPCellID0)

GPIO Port A base: 0x4000.4000
GPIO Port B base: 0x4000.5000
GPIO Port C base: 0x4000.6000
GPIO Port D base: 0x4000.7000
GPIO Port E base: 0x4002.4000
GPIO Port F base: 0x4002.5000
GPIO Port G base: 0x4002.6000
GPIO Port H base: 0x4002.7000
Offset 0xFF0
Type RO, reset 0x0000.000D

	31	30	29	28	27	26	25	24	23	22	21	20	19	18	17	16
	reserved															
Type	RO	RO	RO	RO	RO	RO	RO	RO	RO	RO	RO	RO	RO	RO	RO	RO
Reset	0	0	0	0	0	0	0	0	0	0	0	0	0	0	0	0

	15	14	13	12	11	10	9	8	7	6	5	4	3	2	1	0
	reserved								CID0							
Type	RO	RO	RO	RO	RO	RO	RO	RO	RO	RO	RO	RO	RO	RO	RO	RO
Reset	0	0	0	0	0	0	0	0	0	0	0	0	1	1	0	1

Bit/Field	Name	Type	Reset	Description
31:8	reserved	RO	0x00	Software should not rely on the value of a reserved bit. To provide compatibility with future products, the value of a reserved bit should be preserved across a read-modify-write operation.
7:0	CID0	RO	0x0D	GPIO PrimeCell ID Register[7:0] Provides software a standard cross-peripheral identification system.

Register 30: GPIO PrimeCell Identification 1 (GPIOPCellID1), offset 0xFF4

The **GPIOPCellID0**, **GPIOPCellID1**, **GPIOPCellID2**, and **GPIOPCellID3** registers are four 8-bit wide registers, that can conceptually be treated as one 32-bit register. The register is used as a standard cross-peripheral identification system.

GPIO PrimeCell Identification 1 (GPIOPCellID1)

GPIO Port A base: 0x4000.4000
GPIO Port B base: 0x4000.5000
GPIO Port C base: 0x4000.6000
GPIO Port D base: 0x4000.7000
GPIO Port E base: 0x4002.4000
GPIO Port F base: 0x4002.5000
GPIO Port G base: 0x4002.6000
GPIO Port H base: 0x4002.7000
Offset 0xFF4
Type RO, reset 0x0000.00F0

	31	30	29	28	27	26	25	24	23	22	21	20	19	18	17	16
	reserved															
Type	RO	RO	RO	RO	RO	RO	RO	RO	RO	RO	RO	RO	RO	RO	RO	RO
Reset	0	0	0	0	0	0	0	0	0	0	0	0	0	0	0	0

	15	14	13	12	11	10	9	8	7	6	5	4	3	2	1	0
	reserved								CID1							
Type	RO	RO	RO	RO	RO	RO	RO	RO	RO	RO	RO	RO	RO	RO	RO	RO
Reset	0	0	0	0	0	0	0	0	1	1	1	1	0	0	0	0

Bit/Field	Name	Type	Reset	Description
31:8	reserved	RO	0x00	Software should not rely on the value of a reserved bit. To provide compatibility with future products, the value of a reserved bit should be preserved across a read-modify-write operation.
7:0	CID1	RO	0xF0	GPIO PrimeCell ID Register[15:8] Provides software a standard cross-peripheral identification system.

Register 31: GPIO PrimeCell Identification 2 (GPIOPCellID2), offset 0xFF8

The **GPIOPCellID0**, **GPIOPCellID1**, **GPIOPCellID2**, and **GPIOPCellID3** registers are four 8-bit wide registers, that can conceptually be treated as one 32-bit register. The register is used as a standard cross-peripheral identification system.

GPIO PrimeCell Identification 2 (GPIOPCellID2)

GPIO Port A base: 0x4000.4000
GPIO Port B base: 0x4000.5000
GPIO Port C base: 0x4000.6000
GPIO Port D base: 0x4000.7000
GPIO Port E base: 0x4002.4000
GPIO Port F base: 0x4002.5000
GPIO Port G base: 0x4002.6000
GPIO Port H base: 0x4002.7000
Offset 0xFF8
Type RO, reset 0x0000.0005

	31	30	29	28	27	26	25	24	23	22	21	20	19	18	17	16
	reserved															
Type	RO	RO	RO	RO	RO	RO	RO	RO	RO	RO	RO	RO	RO	RO	RO	RO
Reset	0	0	0	0	0	0	0	0	0	0	0	0	0	0	0	0

	15	14	13	12	11	10	9	8	7	6	5	4	3	2	1	0
	reserved								CID2							
Type	RO	RO	RO	RO	RO	RO	RO	RO	RO	RO	RO	RO	RO	RO	RO	RO
Reset	0	0	0	0	0	0	0	0	0	0	0	0	0	1	0	1

Bit/Field	Name	Type	Reset	Description
31:8	reserved	RO	0x00	Software should not rely on the value of a reserved bit. To provide compatibility with future products, the value of a reserved bit should be preserved across a read-modify-write operation.
7:0	CID2	RO	0x05	GPIO PrimeCell ID Register[23:16] Provides software a standard cross-peripheral identification system.

Register 32: GPIO PrimeCell Identification 3 (GPIOPCellID3), offset 0xFFC

The **GPIOPCellID0**, **GPIOPCellID1**, **GPIOPCellID2**, and **GPIOPCellID3** registers are four 8-bit wide registers, that can conceptually be treated as one 32-bit register. The register is used as a standard cross-peripheral identification system.

GPIO PrimeCell Identification 3 (GPIOPCellID3)

GPIO Port A base: 0x4000.4000
GPIO Port B base: 0x4000.5000
GPIO Port C base: 0x4000.6000
GPIO Port D base: 0x4000.7000
GPIO Port E base: 0x4002.4000
GPIO Port F base: 0x4002.5000
GPIO Port G base: 0x4002.6000
GPIO Port H base: 0x4002.7000
Offset 0xFFC
Type RO, reset 0x0000.00B1

	31	30	29	28	27	26	25	24	23	22	21	20	19	18	17	16
	reserved															
Type	RO	RO	RO	RO	RO	RO	RO	RO	RO	RO	RO	RO	RO	RO	RO	RO
Reset	0	0	0	0	0	0	0	0	0	0	0	0	0	0	0	0

	15	14	13	12	11	10	9	8	7	6	5	4	3	2	1	0
	reserved								CID3							
Type	RO	RO	RO	RO	RO	RO	RO	RO	RO	RO	RO	RO	RO	RO	RO	RO
Reset	0	0	0	0	0	0	0	0	1	0	1	1	0	0	0	1

Bit/Field	Name	Type	Reset	Description
31:8	reserved	RO	0x00	Software should not rely on the value of a reserved bit. To provide compatibility with future products, the value of a reserved bit should be preserved across a read-modify-write operation.
7:0	CID3	RO	0xB1	GPIO PrimeCell ID Register[31:24] Provides software a standard cross-peripheral identification system.

9 General-Purpose Timers

Programmable timers can be used to count or time external events that drive the Timer input pins. The Stellaris® General-Purpose Timer Module (GPTM) contains four GPTM blocks (Timer0, Timer1, Timer 2, and Timer 3). Each GPTM block provides two 16-bit timers/counters (referred to as TimerA and TimerB) that can be configured to operate independently as timers or event counters, or configured to operate as one 32-bit timer or one 32-bit Real-Time Clock (RTC).

The GPT Module is one timing resource available on the Stellaris microcontrollers. Other timer resources include the System Timer (SysTick) (see 88).

The General-Purpose Timers provide the following features:

- Four General-Purpose Timer Modules (GPTM), each of which provides two 16-bit timers/counters. Each GPTM can be configured to operate independently:
  - As a single 32-bit timer
  - As one 32-bit Real-Time Clock (RTC) to event capture
  - For Pulse Width Modulation (PWM)
- 32-bit Timer modes
  - Programmable one-shot timer
  - Programmable periodic timer
  - Real-Time Clock when using an external 32.768-KHz clock as the input
  - User-enabled stalling when the controller asserts CPU Halt flag during debug
- 16-bit Timer modes
  - General-purpose timer function with an 8-bit prescaler (for one-shot and periodic modes only)
  - Programmable one-shot timer
  - Programmable periodic timer
  - User-enabled stalling when the controller asserts CPU Halt flag during debug
- 16-bit Input Capture modes
  - Input edge count capture
  - Input edge time capture
- 16-bit PWM mode
  - Simple PWM mode with software-programmable output inversion of the PWM signal

9.1 Block Diagram

Note: In Figure 9-1 on page 327, the specific CCP pins available depend on the Stellaris device. See Table 9-1 on page 327 for the available CCPs.

Figure 9-1. GPTM Module Block Diagram

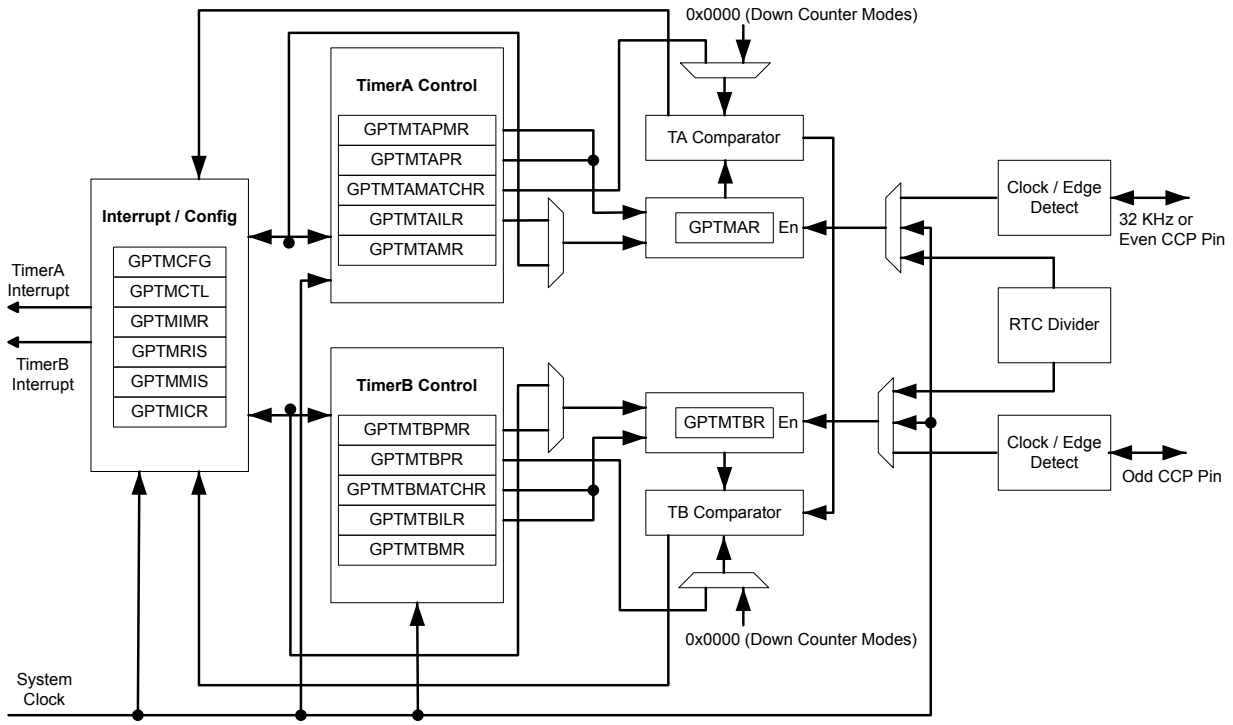

Table 9-1. Available CCP Pins

Timer	16-Bit Up/Down Counter	Even CCP Pin	Odd CCP Pin
Timer 0	TimerA	CCP0	-
	TimerB	-	CCP1
Timer 1	TimerA	CCP2	-
	TimerB	-	CCP3
Timer 2	TimerA	CCP4	-
	TimerB	-	CCP5
Timer 3	TimerA	CCP6	-
	TimerB	-	CCP7

9.2 Signal Description

Table 9-2 on page 328 and Table 9-3 on page 328 list the external signals of the GP Timer module and describe the function of each. The GP Timer signals are alternate functions for some GPIO signals and default to be GPIO signals at reset. The column in the table below titled "Pin Assignment" lists the possible GPIO pin placements for these GP Timer signals. The AFSEL bit in the **GPIO Alternate Function Select (GPIOAFSEL)** register (page 301) should be set to choose the GP Timer function. For more information on configuring GPIOs, see “General-Purpose Input/Outputs (GPIOs)” on page 278.

Table 9-2. General-Purpose Timers Signals (100LQFP)

Pin Name	Pin Number	Pin Type	Buffer Type[a]	Description
CCP0	66	I/O	TTL	Capture/Compare/PWM 0.
CCP1	100	I/O	TTL	Capture/Compare/PWM 1.
CCP2	67	I/O	TTL	Capture/Compare/PWM 2.
CCP3	23	I/O	TTL	Capture/Compare/PWM 3.
CCP4	22	I/O	TTL	Capture/Compare/PWM 4.
CCP5	25	I/O	TTL	Capture/Compare/PWM 5.
CCP6	86	I/O	TTL	Capture/Compare/PWM 6.
CCP7	85	I/O	TTL	Capture/Compare/PWM 7.

a. The TTL designation indicates the pin has TTL-compatible voltage levels.

Table 9-3. General-Purpose Timers Signals (108BGA)

Pin Name	Pin Number	Pin Type	Buffer Type[a]	Description
CCP0	E12	I/O	TTL	Capture/Compare/PWM 0.
CCP1	F1	I/O	TTL	Capture/Compare/PWM 1.
CCP2	D12	I/O	TTL	Capture/Compare/PWM 2.
CCP3	M2	I/O	TTL	Capture/Compare/PWM 3.
CCP4	L2	I/O	TTL	Capture/Compare/PWM 4.
CCP5	L1	I/O	TTL	Capture/Compare/PWM 5.
CCP6	C9	I/O	TTL	Capture/Compare/PWM 6.
CCP7	C8	I/O	TTL	Capture/Compare/PWM 7.

a. The TTL designation indicates the pin has TTL-compatible voltage levels.

9.3 Functional Description

The main components of each GPTM block are two free-running 16-bit up/down counters (referred to as TimerA and TimerB), two 16-bit match registers, two prescaler match registers, and two 16-bit load/initialization registers and their associated control functions. The exact functionality of each GPTM is controlled by software and configured through the register interface.

Software configures the GPTM using the **GPTM Configuration (GPTMCFG)** register (see page 339), the **GPTM TimerA Mode (GPTMTAMR)** register (see page 340), and the **GPTM TimerB Mode (GPTMTBMR)** register (see page 342). When in one of the 32-bit modes, the timer can only act as a 32-bit timer. However, when configured in 16-bit mode, the GPTM can have its two 16-bit timers configured in any combination of the 16-bit modes.

9.3.1 GPTM Reset Conditions

After reset has been applied to the GPTM module, the module is in an inactive state, and all control registers are cleared and in their default states. Counters TimerA and TimerB are initialized to 0xFFFF, along with their corresponding load registers: the **GPTM TimerA Interval Load (GPTMTAILR)** register (see page 353) and the **GPTM TimerB Interval Load (GPTMTBILR)** register (see page 354). The prescale counters are initialized to 0x00: the **GPTM TimerA Prescale (GPTMTAPR)** register (see page 357) and the **GPTM TimerB Prescale (GPTMTBPR)** register (see page 358).

9.3.2 32-Bit Timer Operating Modes

This section describes the three GPTM 32-bit timer modes (One-Shot, Periodic, and RTC) and their configuration.

The GPTM is placed into 32-bit mode by writing a 0 (One-Shot/Periodic 32-bit timer mode) or a 1 (RTC mode) to the **GPTM Configuration (GPTMCFG)** register. In both configurations, certain GPTM registers are concatenated to form pseudo 32-bit registers. These registers include:

- **GPTM TimerA Interval Load (GPTMTAILR)** register [15:0], see page 353
- **GPTM TimerB Interval Load (GPTMTBILR)** register [15:0], see page 354
- **GPTM TimerA (GPTMTAR)** register [15:0], see page 361
- **GPTM TimerB (GPTMTBR)** register [15:0], see page 362

In the 32-bit modes, the GPTM translates a 32-bit write access to **GPTMTAILR** into a write access to both **GPTMTAILR** and **GPTMTBILR**. The resulting word ordering for such a write operation is:

`GPTMTBILR[15:0]:GPTMTAILR[15:0]`

Likewise, a read access to **GPTMTAR** returns the value:

`GPTMTBR[15:0]:GPTMTAR[15:0]`

9.3.2.1 32-Bit One-Shot/Periodic Timer Mode

In 32-bit one-shot and periodic timer modes, the concatenated versions of the TimerA and TimerB registers are configured as a 32-bit down-counter. The selection of one-shot or periodic mode is determined by the value written to the `TAMR` field of the **GPTM TimerA Mode (GPTMTAMR)** register (see page 340), and there is no need to write to the **GPTM TimerB Mode (GPTMTBMR)** register.

When software writes the `TAEN` bit in the **GPTM Control (GPTMCTL)** register (see page 344), the timer begins counting down from its preloaded value. Once the 0x0000.0000 state is reached, the timer reloads its start value from the concatenated **GPTMTAILR** on the next cycle. If configured to be a one-shot timer, the timer stops counting and clears the `TAEN` bit in the **GPTMCTL** register. If configured as a periodic timer, it continues counting.

In addition to reloading the count value, the GPTM generates interrupts and triggers when it reaches the 0x000.0000 state. The GPTM sets the `TATORIS` bit in the **GPTM Raw Interrupt Status (GPTMRIS)** register (see page 349), and holds it until it is cleared by writing the **GPTM Interrupt Clear (GPTMICR)** register (see page 351). If the time-out interrupt is enabled in the **GPTM Interrupt Mask (GPTMIMR)** register (see page 347), the GPTM also sets the `TATOMIS` bit in the **GPTM Masked Interrupt Status (GPTMMIS)** register (see page 350).

If software reloads the **GPTMTAILR** register while the counter is running, the counter loads the new value on the next clock cycle and continues counting from the new value.

If the `TASTALL` bit in the **GPTMCTL** register is set, the timer freezes counting while the processor is halted by the debugger. The timer resumes counting when the processor resumes execution.

9.3.2.2 32-Bit Real-Time Clock Timer Mode

In Real-Time Clock (RTC) mode, the concatenated versions of the TimerA and TimerB registers are configured as a 32-bit up-counter. When RTC mode is selected for the first time, the counter is loaded with a value of 0x0000.0001. All subsequent load values must be written to the **GPTM TimerA Match (GPTMTAMATCHR)** register (see page 355) by the controller.

The input clock on an even CCP input is required to be 32.768 KHz in RTC mode. The clock signal is then divided down to a 1 Hz rate and is passed along to the input of the 32-bit counter.

When software writes the TAEN bit inthe **GPTMCTL** register, the counter starts counting up from its preloaded value of 0x0000.0001. When the current count value matches the preloaded value in the **GPTMTAMATCHR** register, it rolls over to a value of 0x0000.0000 and continues counting until either a hardware reset, or it is disabled by software (clearing the TAEN bit). When a match occurs, the GPTM asserts the RTCRIS bit in **GPTMRIS**. If the RTC interrupt is enabled in **GPTMIMR**, the GPTM also sets the RTCMIS bit in **GPTMMIS** and generates a controller interrupt. The status flags are cleared by writing the RTCCINT bit in **GPTMICR**.

If the TASTALL and/or TBSTALL bits in the **GPTMCTL** register are set, the timer does not freeze if the RTCEN bit is set in **GPTMCTL**.

9.3.3 16-Bit Timer Operating Modes

The GPTM is placed into global 16-bit mode by writing a value of 0x4 to the **GPTM Configuration (GPTMCFG)** register (see page 339). This section describes each of the GPTM 16-bit modes of operation. TimerA and TimerB have identical modes, so a single description is given using an **n** to reference both.

9.3.3.1 16-Bit One-Shot/Periodic Timer Mode

In 16-bit one-shot and periodic timer modes, the timer is configured as a 16-bit down-counter with an optional 8-bit prescaler that effectively extends the counting range of the timer to 24 bits. The selection of one-shot or periodic mode is determined by the value written to the TnMR field of the **GPTMTnMR** register. The optional prescaler is loaded into the **GPTM Timern Prescale (GPTMTnPR)** register.

When software writes the TnEN bit in the **GPTMCTL** register, the timer begins counting down from its preloaded value. Once the 0x0000 state is reached, the timer reloads its start value from **GPTMTnILR** and **GPTMTnPR** on the next cycle. If configured to be a one-shot timer, the timer stops counting and clears the TnEN bit in the **GPTMCTL** register. If configured as a periodic timer, it continues counting.

In addition to reloading the count value, the timer generates interrupts and triggers when it reaches the 0x0000 state. The GPTM sets the TnTORIS bit in the **GPTMRIS** register, and holds it until it is cleared by writing the **GPTMICR** register. If the time-out interrupt is enabled in **GPTMIMR**, the GPTM also sets the TnTOMIS bit in **GPTMISR** and generates a controller interrupt.

If software reloads the **GPTMTAILR** register while the counter is running, the counter loads the new value on the next clock cycle and continues counting from the new value.

If the TnSTALL bit in the **GPTMCTL** register is set, the timer freezes counting while the processor is halted by the debugger. The timer resumes counting when the processor resumes execution.

The following example shows a variety of configurations for a 16-bit free running timer while using the prescaler. All values assume a 50-MHz clock with Tc=20 ns (clock period).

Table 9-4. 16-Bit Timer With Prescaler Configurations

Prescale	#Clock (T c)[a]	Max Time	Units
00000000	1	1.3107	mS
00000001	2	2.6214	mS
00000010	3	3.9322	mS
----------	--	--	--

Table 9-4. 16-Bit Timer With Prescaler Configurations *(continued)*

Prescale	#Clock (T c)[a]	Max Time	Units
11111101	254	332.9229	mS
11111110	255	334.2336	mS
11111111	256	335.5443	mS

a. Tc is the clock period.

9.3.3.2 16-Bit Input Edge Count Mode

Note: For rising-edge detection, the input signal must be High for at least two system clock periods following the rising edge. Similarly, for falling-edge detection, the input signal must be Low for at least two system clock periods following the falling edge. Based on this criteria, the maximum input frequency for edge detection is 1/4 of the system frequency.

Note: The prescaler is not available in 16-Bit Input Edge Count mode.

In Edge Count mode, the timer is configured as a down-counter capable of capturing three types of events: rising edge, falling edge, or both. To place the timer in Edge Count mode, the `TnCMR` bit of the **GPTMTnMR** register must be set to 0. The type of edge that the timer counts is determined by the `TnEVENT` fields of the **GPTMCTL** register. During initialization, the **GPTM Timern Match (GPTMTnMATCHR)** register is configured so that the difference between the value in the **GPTMTnILR** register and the **GPTMTnMATCHR** register equals the number of edge events that must be counted.

When software writes the `TnEN` bit in the **GPTM Control (GPTMCTL)** register, the timer is enabled for event capture. Each input event on the `CCP` pin decrements the counter by 1 until the event count matches **GPTMTnMATCHR**. When the counts match, the GPTM asserts the `CnMRIS` bit in the **GPTMRIS** register (and the `CnMMIS` bit, if the interrupt is not masked).

The counter is then reloaded using the value in **GPTMTnILR**, and stopped since the GPTM automatically clears the `TnEN` bit in the **GPTMCTL** register. Once the event count has been reached, all further events are ignored until `TnEN` is re-enabled by software.

Figure 9-2 on page 332 shows how input edge count mode works. In this case, the timer start value is set to **GPTMTnILR** =0x000A and the match value is set to **GPTMTnMATCHR** =0x0006 so that four edge events are counted. The counter is configured to detect both edges of the input signal.

Note that the last two edges are not counted since the timer automatically clears the `TnEN` bit after the current count matches the value in the **GPTMTnMATCHR** register.

Figure 9-2. 16-Bit Input Edge Count Mode Example

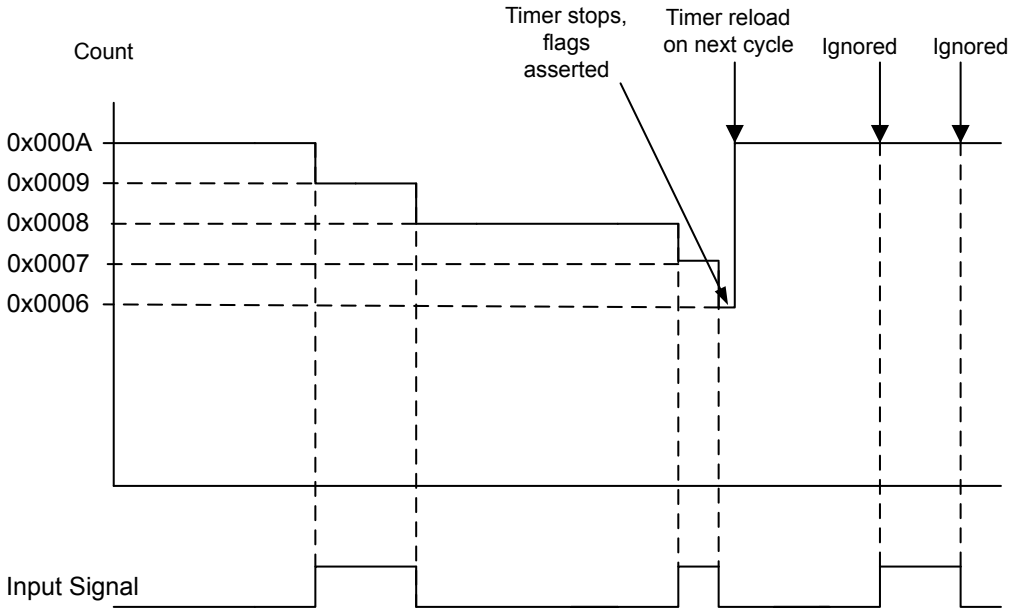

9.3.3.3 16-Bit Input Edge Time Mode

Note: For rising-edge detection, the input signal must be High for at least two system clock periods following the rising edge. Similarly, for falling edge detection, the input signal must be Low for at least two system clock periods following the falling edge. Based on this criteria, the maximum input frequency for edge detection is 1/4 of the system frequency.

Note: The prescaler is not available in 16-Bit Input Edge Time mode.

In Edge Time mode, the timer is configured as a free-running down-counter initialized to the value loaded in the **GPTMTnILR** register (or 0xFFFF at reset). The timer is capable of capturing three types of events: rising edge, falling edge, or both. The timer is placed into Edge Time mode by setting the `TnCMR` bit in the **GPTMTnMR** register, and the type of event that the timer captures is determined by the `TnEVENT` fields of the **GPTMCTL** register.

When software writes the `TnEN` bit in the **GPTMCTL** register, the timer is enabled for event capture. When the selected input event is detected, the current Tn counter value is captured in the **GPTMTnR** register and is available to be read by the controller. The GPTM then asserts the `CnERIS` bit (and the `CnEMIS` bit, if the interrupt is not masked).

After an event has been captured, the timer does not stop counting. It continues to count until the `TnEN` bit is cleared. When the timer reaches the 0x0000 state, it is reloaded with the value from the **GPTMTnILR** register.

Figure 9-3 on page 333 shows how input edge timing mode works. In the diagram, it is assumed that the start value of the timer is the default value of 0xFFFF, and the timer is configured to capture rising edge events.

Each time a rising edge event is detected, the current count value is loaded into the **GPTMTnR** register, and is held there until another rising edge is detected (at which point the new count value is loaded into **GPTMTnR**).

Figure 9-3. 16-Bit Input Edge Time Mode Example

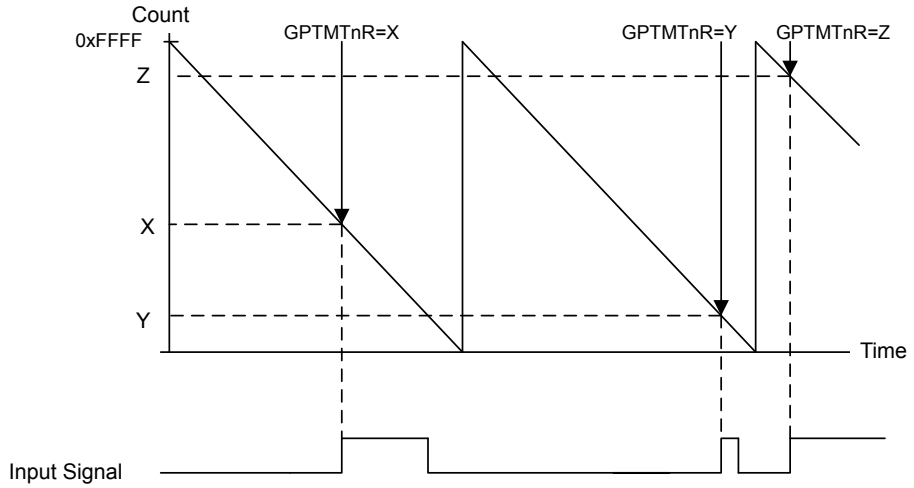

9.3.3.4 16-Bit PWM Mode

Note: The prescaler is not available in 16-Bit PWM mode.

The GPTM supports a simple PWM generation mode. In PWM mode, the timer is configured as a down-counter with a start value (and thus period) defined by **GPTMTnILR**. In this mode, the PWM frequency and period are synchronous events and therefore guaranteed to be glitch free. PWM mode is enabled with the **GPTMTnMR** register by setting the `TnAMS` bit to 0x1, the `TnCMR` bit to 0x0, and the `TnMR` field to 0x2.

When software writes the `TnEN` bit in the **GPTMCTL** register, the counter begins counting down until it reaches the 0x0000 state. On the next counter cycle, the counter reloads its start value from **GPTMTnILR** and continues counting until disabled by software clearing the `TnEN` bit in the **GPTMCTL** register. No interrupts or status bits are asserted in PWM mode.

The output PWM signal asserts when the counter is at the value of the **GPTMTnILR** register (its start state), and is deasserted when the counter value equals the value in the **GPTM Timern Match Register (GPTMTnMATCHR)**. Software has the capability of inverting the output PWM signal by setting the `TnPWML` bit in the **GPTMCTL** register.

Figure 9-4 on page 334 shows how to generate an output PWM with a 1-ms period and a 66% duty cycle assuming a 50-MHz input clock and **TnPWML** =0 (duty cycle would be 33% for the **TnPWML** =1 configuration). For this example, the start value is **GPTMTnIRL**=0xC350 and the match value is **GPTMTnMATCHR**=0x411A.

Figure 9-4. 16-Bit PWM Mode Example

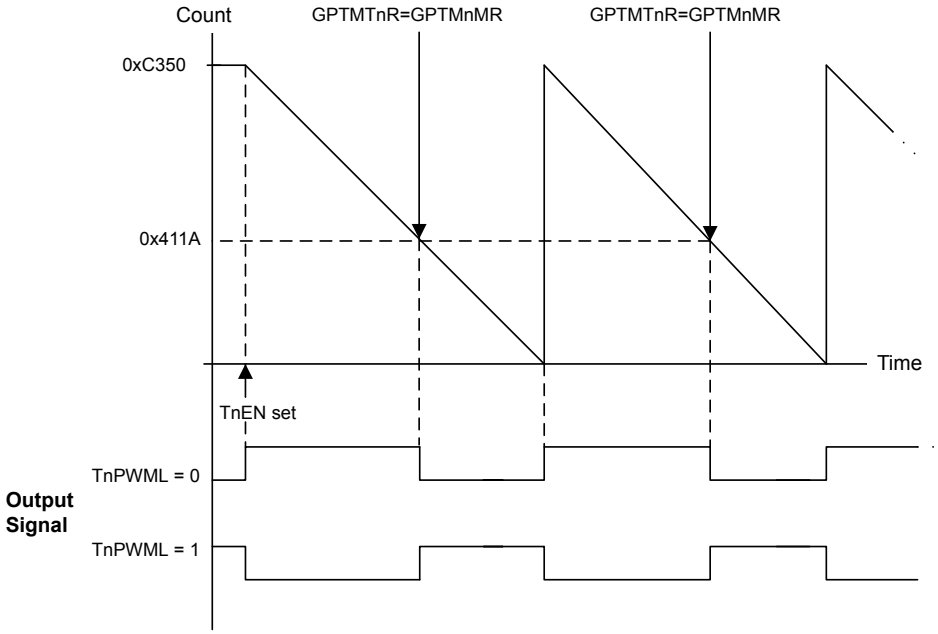

9.4 Initialization and Configuration

To use the general-purpose timers, the peripheral clock must be enabled by setting the `TIMER0`, `TIMER1`, `TIMER2`, and `TIMER3` bits in the **RCGC1** register.

This section shows module initialization and configuration examples for each of the supported timer modes.

9.4.1 32-Bit One-Shot/Periodic Timer Mode

The GPTM is configured for 32-bit One-Shot and Periodic modes by the following sequence:

1. Ensure the timer is disabled (the `TAEN` bit in the **GPTMCTL** register is cleared) before making any changes.
2. Write the **GPTM Configuration Register (GPTMCFG)** with a value of 0x0.
3. Set the `TAMR` field in the **GPTM TimerA Mode Register (GPTMTAMR)**:
   a. Write a value of 0x1 for One-Shot mode.
   b. Write a value of 0x2 for Periodic mode.
4. Load the start value into the **GPTM TimerA Interval Load Register (GPTMTAILR)**.
5. If interrupts are required, set the `TATOIM` bit in the **GPTM Interrupt Mask Register (GPTMIMR)**.
6. Set the `TAEN` bit in the **GPTMCTL** register to enable the timer and start counting.

7. Poll the TATORIS bit in the **GPTMRIS** register or wait for the interrupt to be generated (if enabled). In both cases, the status flags are cleared by writing a 1 to the TATOCINT bit of the **GPTM Interrupt Clear Register (GPTMICR)**.

In One-Shot mode, the timer stops counting after step 7 on page 335. To re-enable the timer, repeat the sequence. A timer configured in Periodic mode does not stop counting after it times out.

9.4.2 32-Bit Real-Time Clock (RTC) Mode

To use the RTC mode, the timer must have a 32.768-KHz input signal on an even CCP input. To enable the RTC feature, follow these steps:

1. Ensure the timer is disabled (the TAEN bit is cleared) before making any changes.
2. Write the **GPTM Configuration Register (GPTMCFG)** with a value of 0x1.
3. Write the desired match value to the **GPTM TimerA Match Register (GPTMTAMATCHR)**.
4. Set/clear the RTCEN bit in the **GPTM Control Register (GPTMCTL)** as desired.
5. If interrupts are required, set the RTCIM bit in the **GPTM Interrupt Mask Register (GPTMIMR)**.
6. Set the TAEN bit in the **GPTMCTL** register to enable the timer and start counting.

When the timer count equals the value in the **GPTMTAMATCHR** register, the GPTM asserts the RTCRIS bit in the **GPTMRIS** register and continues counting until Timer A is disabled or a hardware reset. The interrupt is cleared by writing the RTCCINT bit in the **GPTMICR** register.

9.4.3 16-Bit One-Shot/Periodic Timer Mode

A timer is configured for 16-bit One-Shot and Periodic modes by the following sequence:

1. Ensure the timer is disabled (the TnEN bit is cleared) before making any changes.
2. Write the **GPTM Configuration Register (GPTMCFG)** with a value of 0x4.
3. Set the TnMR field in the **GPTM Timer Mode (GPTMTnMR)** register:
   a. Write a value of 0x1 for One-Shot mode.
   b. Write a value of 0x2 for Periodic mode.
4. If a prescaler is to be used, write the prescale value to the **GPTM Timern Prescale Register (GPTMTnPR)**.
5. Load the start value into the **GPTM Timer Interval Load Register (GPTMTnILR)**.
6. If interrupts are required, set the TnTOIM bit in the **GPTM Interrupt Mask Register (GPTMIMR)**.
7. Set the TnEN bit in the **GPTM Control Register (GPTMCTL)** to enable the timer and start counting.
8. Poll the TnTORIS bit in the **GPTMRIS** register or wait for the interrupt to be generated (if enabled). In both cases, the status flags are cleared by writing a 1 to the TnTOCINT bit of the **GPTM Interrupt Clear Register (GPTMICR)**.

In One-Shot mode, the timer stops counting after step 8 on page 335. To re-enable the timer, repeat the sequence. A timer configured in Periodic mode does not stop counting after it times out.

9.4.4 16-Bit Input Edge Count Mode

A timer is configured to Input Edge Count mode by the following sequence:

1. Ensure the timer is disabled (the `TnEN` bit is cleared) before making any changes.
2. Write the **GPTM Configuration (GPTMCFG)** register with a value of 0x4.
3. In the **GPTM Timer Mode (GPTMTnMR)** register, write the `TnCMR` field to 0x0 and the `TnMR` field to 0x3.
4. Configure the type of event(s) that the timer captures by writing the `TnEVENT` field of the **GPTM Control (GPTMCTL)** register.
5. Load the timer start value into the **GPTM Timern Interval Load (GPTMTnILR)** register.
6. Load the desired event count into the **GPTM Timern Match (GPTMTnMATCHR)** register.
7. If interrupts are required, set the `CnMIM` bit in the **GPTM Interrupt Mask (GPTMIMR)** register.
8. Set the `TnEN` bit in the **GPTMCTL** register to enable the timer and begin waiting for edge events.
9. Poll the `CnMRIS` bit in the **GPTMRIS** register or wait for the interrupt to be generated (if enabled). In both cases, the status flags are cleared by writing a 1 to the `CnMCINT` bit of the **GPTM Interrupt Clear (GPTMICR)** register.

In Input Edge Count Mode, the timer stops after the desired number of edge events has been detected. To re-enable the timer, ensure that the `TnEN` bit is cleared and repeat step 4 on page 336 through step 9 on page 336.

9.4.5 16-Bit Input Edge Timing Mode

A timer is configured to Input Edge Timing mode by the following sequence:

1. Ensure the timer is disabled (the `TnEN` bit is cleared) before making any changes.
2. Write the **GPTM Configuration (GPTMCFG)** register with a value of 0x4.
3. In the **GPTM Timer Mode (GPTMTnMR)** register, write the `TnCMR` field to 0x1 and the `TnMR` field to 0x3.
4. Configure the type of event that the timer captures by writing the `TnEVENT` field of the **GPTM Control (GPTMCTL)** register.
5. Load the timer start value into the **GPTM Timern Interval Load (GPTMTnILR)** register.
6. If interrupts are required, set the `CnEIM` bit in the **GPTM Interrupt Mask (GPTMIMR)** register.
7. Set the `TnEN` bit in the **GPTM Control (GPTMCTL)** register to enable the timer and start counting.
8. Poll the `CnERIS` bit in the **GPTMRIS** register or wait for the interrupt to be generated (if enabled). In both cases, the status flags are cleared by writing a 1 to the `CnECINT` bit of the **GPTM**

Interrupt Clear (GPTMICR) register. The time at which the event happened can be obtained by reading the **GPTM Timern (GPTMTnR)** register.

In Input Edge Timing mode, the timer continues running after an edge event has been detected, but the timer interval can be changed at any time by writing the **GPTMTnILR** register. The change takes effect at the next cycle after the write.

9.4.6 16-Bit PWM Mode

A timer is configured to PWM mode using the following sequence:

1. Ensure the timer is disabled (the `TnEN` bit is cleared) before making any changes.
2. Write the **GPTM Configuration (GPTMCFG)** register with a value of 0x4.
3. In the **GPTM Timer Mode (GPTMTnMR)** register, set the `TnAMS` bit to 0x1, the `TnCMR` bit to 0x0, and the `TnMR` field to 0x2.
4. Configure the output state of the PWM signal (whether or not it is inverted) in the `TnPWML` field of the **GPTM Control (GPTMCTL)** register.
5. Load the timer start value into the **GPTM Timern Interval Load (GPTMTnILR)** register.
6. Load the **GPTM Timern Match (GPTMTnMATCHR)** register with the desired value.
7. Set the `TnEN` bit in the **GPTM Control (GPTMCTL)** register to enable the timer and begin generation of the output PWM signal.

In PWM Timing mode, the timer continues running after the PWM signal has been generated. The PWM period can be adjusted at any time by writing the **GPTMTnILR** register, and the change takes effect at the next cycle after the write.

9.5 Register Map

Table 9-5 on page 337 lists the GPTM registers. The offset listed is a hexadecimal increment to the register's address, relative to that timer's base address:

- Timer0: 0x4003.0000
- Timer1: 0x4003.1000
- Timer2: 0x4003.2000
- Timer3: 0x4003.3000

Note that the Timer module clock must be enabled before the registers can be programmed (see page 212). There must be a delay of 3 system clocks after the Timer module clock is enabled before any Timer module registers are accessed.

Table 9-5. Timers Register Map

Offset	Name	Type	Reset	Description	See page
0x000	GPTMCFG	R/W	0x0000.0000	GPTM Configuration	339
0x004	GPTMTAMR	R/W	0x0000.0000	GPTM TimerA Mode	340
0x008	GPTMTBMR	R/W	0x0000.0000	GPTM TimerB Mode	342

Table 9-5. Timers Register Map *(continued)*

Offset	Name	Type	Reset	Description	See page
0x00C	GPTMCTL	R/W	0x0000.0000	GPTM Control	344
0x018	GPTMIMR	R/W	0x0000.0000	GPTM Interrupt Mask	347
0x01C	GPTMRIS	RO	0x0000.0000	GPTM Raw Interrupt Status	349
0x020	GPTMMIS	RO	0x0000.0000	GPTM Masked Interrupt Status	350
0x024	GPTMICR	W1C	0x0000.0000	GPTM Interrupt Clear	351
0x028	GPTMTAILR	R/W	0xFFFF.FFFF	GPTM TimerA Interval Load	353
0x02C	GPTMTBILR	R/W	0x0000.FFFF	GPTM TimerB Interval Load	354
0x030	GPTMTAMATCHR	R/W	0xFFFF.FFFF	GPTM TimerA Match	355
0x034	GPTMTBMATCHR	R/W	0x0000.FFFF	GPTM TimerB Match	356
0x038	GPTMTAPR	R/W	0x0000.0000	GPTM TimerA Prescale	357
0x03C	GPTMTBPR	R/W	0x0000.0000	GPTM TimerB Prescale	358
0x040	GPTMTAPMR	R/W	0x0000.0000	GPTM TimerA Prescale Match	359
0x044	GPTMTBPMR	R/W	0x0000.0000	GPTM TimerB Prescale Match	360
0x048	GPTMTAR	RO	0xFFFF.FFFF	GPTM TimerA	361
0x04C	GPTMTBR	RO	0x0000.FFFF	GPTM TimerB	362

9.6 Register Descriptions

The remainder of this section lists and describes the GPTM registers, in numerical order by address offset.

Register 1: GPTM Configuration (GPTMCFG), offset 0x000

This register configures the global operation of the GPTM module. The value written to this register determines whether the GPTM is in 32- or 16-bit mode.

GPTM Configuration (GPTMCFG)

Timer0 base: 0x4003.0000
Timer1 base: 0x4003.1000
Timer2 base: 0x4003.2000
Timer3 base: 0x4003.3000
Offset 0x000
Type R/W, reset 0x0000.0000

	31	30	29	28	27	26	25	24	23	22	21	20	19	18	17	16
	reserved															
Type	RO	RO	RO	RO	RO	RO	RO	RO	RO	RO	RO	RO	RO	RO	RO	RO
Reset	0	0	0	0	0	0	0	0	0	0	0	0	0	0	0	0

	15	14	13	12	11	10	9	8	7	6	5	4	3	2	1	0
	reserved													GPTMCFG		
Type	RO	RO	RO	RO	RO	RO	RO	RO	RO	RO	RO	RO	RO	R/W	R/W	R/W
Reset	0	0	0	0	0	0	0	0	0	0	0	0	0	0	0	0

Bit/Field	Name	Type	Reset	Description
31:3	reserved	RO	0x00	Software should not rely on the value of a reserved bit. To provide compatibility with future products, the value of a reserved bit should be preserved across a read-modify-write operation.
2:0	GPTMCFG	R/W	0x0	GPTM Configuration The `GPTMCFG` values are defined as follows: Value — Description 0x0 — 32-bit timer configuration. 0x1 — 32-bit real-time clock (RTC) counter configuration. 0x2 — Reserved 0x3 — Reserved 0x4-0x7 — 16-bit timer configuration, function is controlled by bits 1:0 of **GPTMTAMR** and **GPTMTBMR**.

Register 2: GPTM TimerA Mode (GPTMTAMR), offset 0x004

This register configures the GPTM based on the configuration selected in the **GPTMCFG** register. When in 16-bit PWM mode, set the TAAMS bit to 0x1, the TACMR bit to 0x0, and the TAMR field to 0x2.

GPTM TimerA Mode (GPTMTAMR)

Timer0 base: 0x4003.0000
Timer1 base: 0x4003.1000
Timer2 base: 0x4003.2000
Timer3 base: 0x4003.3000
Offset 0x004
Type R/W, reset 0x0000.0000

	31	30	29	28	27	26	25	24	23	22	21	20	19	18	17	16
	reserved															
Type	RO	RO	RO	RO	RO	RO	RO	RO	RO	RO	RO	RO	RO	RO	RO	RO
Reset	0	0	0	0	0	0	0	0	0	0	0	0	0	0	0	0

	15	14	13	12	11	10	9	8	7	6	5	4	3	2	1	0
	reserved												TAAMS	TACMR	TAMR	
Type	RO	RO	RO	RO	RO	RO	RO	RO	RO	RO	RO	RO	R/W	R/W	R/W	R/W
Reset	0	0	0	0	0	0	0	0	0	0	0	0	0	0	0	0

Bit/Field	Name	Type	Reset	Description
31:4	reserved	RO	0x00	Software should not rely on the value of a reserved bit. To provide compatibility with future products, the value of a reserved bit should be preserved across a read-modify-write operation.
3	TAAMS	R/W	0	GPTM TimerA Alternate Mode Select The TAAMS values are defined as follows: Value Description 0 Capture mode is enabled. 1 PWM mode is enabled. **Note:** To enable PWM mode, you must also clear the TACMR bit and set the TAMR field to 0x2.
2	TACMR	R/W	0	GPTM TimerA Capture Mode The TACMR values are defined as follows: Value Description 0 Edge-Count mode 1 Edge-Time mode

Bit/Field	Name	Type	Reset	Description
1:0	TAMR	R/W	0x0	GPTM TimerA Mode The `TAMR` values are defined as follows: Value Description 0x0 Reserved 0x1 One-Shot Timer mode 0x2 Periodic Timer mode 0x3 Capture mode The Timer mode is based on the timer configuration defined by bits 2:0 in the **GPTMCFG** register (16-or 32-bit). In 16-bit timer configuration, `TAMR` controls the 16-bit timer modes for TimerA. In 32-bit timer configuration, this register controls the mode and the contents of **GPTMTBMR** are ignored.

Register 3: GPTM TimerB Mode (GPTMTBMR), offset 0x008

This register configures the GPTM based on the configuration selected in the **GPTMCFG** register. When in 16-bit PWM mode, set the TBAMS bit to 0x1, the TBCMR bit to 0x0, and the TBMR field to 0x2.

GPTM TimerB Mode (GPTMTBMR)

Timer0 base: 0x4003.0000
Timer1 base: 0x4003.1000
Timer2 base: 0x4003.2000
Timer3 base: 0x4003.3000
Offset 0x008
Type R/W, reset 0x0000.0000

	31	30	29	28	27	26	25	24	23	22	21	20	19	18	17	16
	reserved															
Type	RO	RO	RO	RO	RO	RO	RO	RO	RO	RO	RO	RO	RO	RO	RO	RO
Reset	0	0	0	0	0	0	0	0	0	0	0	0	0	0	0	0

	15	14	13	12	11	10	9	8	7	6	5	4	3	2	1	0
	reserved												TBAMS	TBCMR	TBMR	
Type	RO	RO	RO	RO	RO	RO	RO	RO	RO	RO	RO	RO	R/W	R/W	R/W	R/W
Reset	0	0	0	0	0	0	0	0	0	0	0	0	0	0	0	0

Bit/Field	Name	Type	Reset	Description
31:4	reserved	RO	0x00	Software should not rely on the value of a reserved bit. To provide compatibility with future products, the value of a reserved bit should be preserved across a read-modify-write operation.
3	TBAMS	R/W	0	GPTM TimerB Alternate Mode Select The TBAMS values are defined as follows: Value Description 0 Capture mode is enabled. 1 PWM mode is enabled. **Note:** To enable PWM mode, you must also clear the TBCMR bit and set the TBMR field to 0x2.
2	TBCMR	R/W	0	GPTM TimerB Capture Mode The TBCMR values are defined as follows: Value Description 0 Edge-Count mode 1 Edge-Time mode

Bit/Field	Name	Type	Reset	Description
1:0	TBMR	R/W	0x0	GPTM TimerB Mode The `TBMR` values are defined as follows: Value Description 0x0 Reserved 0x1 One-Shot Timer mode 0x2 Periodic Timer mode 0x3 Capture mode The timer mode is based on the timer configuration defined by bits 2:0 in the **GPTMCFG** register. In 16-bit timer configuration, these bits control the 16-bit timer modes for TimerB. In 32-bit timer configuration, this register's contents are ignored and **GPTMTAMR** is used.

Register 4: GPTM Control (GPTMCTL), offset 0x00C

This register is used alongside the **GPTMCFG** and **GMTMTnMR** registers to fine-tune the timer configuration, and to enable other features such as timer stall.

GPTM Control (GPTMCTL)

Timer0 base: 0x4003.0000
Timer1 base: 0x4003.1000
Timer2 base: 0x4003.2000
Timer3 base: 0x4003.3000
Offset 0x00C
Type R/W, reset 0x0000.0000

	31	30	29	28	27	26	25	24	23	22	21	20	19	18	17	16
	reserved															
Type	RO	RO	RO	RO	RO	RO	RO	RO	RO	RO	RO	RO	RO	RO	RO	RO
Reset	0	0	0	0	0	0	0	0	0	0	0	0	0	0	0	0

	15	14	13	12	11	10	9	8	7	6	5	4	3	2	1	0
	reserved	TBPWML	reserved		TBEVENT		TBSTALL	TBEN	reserved	TAPWML	reserved	RTCEN	TAEVENT		TASTALL	TAEN
Type	RO	R/W	RO	RO	R/W	R/W	R/W	R/W	RO	R/W	RO	R/W	R/W	R/W	R/W	R/W
Reset	0	0	0	0	0	0	0	0	0	0	0	0	0	0	0	0

Bit/Field	Name	Type	Reset	Description
31:15	reserved	RO	0x00	Software should not rely on the value of a reserved bit. To provide compatibility with future products, the value of a reserved bit should be preserved across a read-modify-write operation.
14	TBPWML	R/W	0	GPTM TimerB PWM Output Level The `TBPWML` values are defined as follows: Value Description 0 Output is unaffected. 1 Output is inverted.
13:12	reserved	RO	0	Software should not rely on the value of a reserved bit. To provide compatibility with future products, the value of a reserved bit should be preserved across a read-modify-write operation.
11:10	TBEVENT	R/W	0x0	GPTM TimerB Event Mode The `TBEVENT` values are defined as follows: Value Description 0x0 Positive edge 0x1 Negative edge 0x2 Reserved 0x3 Both edges

Bit/Field	Name	Type	Reset	Description
9	TBSTALL	R/W	0	GPTM Timer B Stall Enable The `TBSTALL` values are defined as follows: Value Description 0 Timer B continues counting while the processor is halted by the debugger. 1 Timer B freezes counting while the processor is halted by the debugger. If the processor is executing normally, the `TBSTALL` bit is ignored.
8	TBEN	R/W	0	GPTM TimerB Enable The `TBEN` values are defined as follows: Value Description 0 TimerB is disabled. 1 TimerB is enabled and begins counting or the capture logic is enabled based on the **GPTMCFG** register.
7	reserved	RO	0	Software should not rely on the value of a reserved bit. To provide compatibility with future products, the value of a reserved bit should be preserved across a read-modify-write operation.
6	TAPWML	R/W	0	GPTM TimerA PWM Output Level The `TAPWML` values are defined as follows: Value Description 0 Output is unaffected. 1 Output is inverted.
5	reserved	RO	0	Software should not rely on the value of a reserved bit. To provide compatibility with future products, the value of a reserved bit should be preserved across a read-modify-write operation.
4	RTCEN	R/W	0	GPTM RTC Enable The `RTCEN` values are defined as follows: Value Description 0 RTC counting is disabled. 1 RTC counting is enabled.
3:2	TAEVENT	R/W	0x0	GPTM TimerA Event Mode The `TAEVENT` values are defined as follows: Value Description 0x0 Positive edge 0x1 Negative edge 0x2 Reserved 0x3 Both edges

Bit/Field	Name	Type	Reset	Description
1	TASTALL	R/W	0	GPTM Timer A Stall Enable The TASTALL values are defined as follows: Value Description 0 Timer A continues counting while the processor is halted by the debugger. 1 Timer A freezes counting while the processor is halted by the debugger. If the processor is executing normally, the TASTALL bit is ignored.
0	TAEN	R/W	0	GPTM TimerA Enable The TAEN values are defined as follows: Value Description 0 TimerA is disabled. 1 TimerA is enabled and begins counting or the capture logic is enabled based on the **GPTMCFG** register.

Register 5: GPTM Interrupt Mask (GPTMIMR), offset 0x018

This register allows software to enable/disable GPTM controller-level interrupts. Writing a 1 enables the interrupt, while writing a 0 disables it.

GPTM Interrupt Mask (GPTMIMR)

Timer0 base: 0x4003.0000
Timer1 base: 0x4003.1000
Timer2 base: 0x4003.2000
Timer3 base: 0x4003.3000
Offset 0x018
Type R/W, reset 0x0000.0000

	31	30	29	28	27	26	25	24	23	22	21	20	19	18	17	16
	reserved															
Type	RO	RO	RO	RO	RO	RO	RO	RO	RO	RO	RO	RO	RO	RO	RO	RO
Reset	0	0	0	0	0	0	0	0	0	0	0	0	0	0	0	0

	15	14	13	12	11	10	9	8	7	6	5	4	3	2	1	0
	reserved					CBEIM	CBMIM	TBTOIM	reserved				RTCIM	CAEIM	CAMIM	TATOIM
Type	RO	RO	RO	RO	RO	R/W	R/W	R/W	RO	RO	RO	RO	R/W	R/W	R/W	R/W
Reset	0	0	0	0	0	0	0	0	0	0	0	0	0	0	0	0

Bit/Field	Name	Type	Reset	Description
31:11	reserved	RO	0x00	Software should not rely on the value of a reserved bit. To provide compatibility with future products, the value of a reserved bit should be preserved across a read-modify-write operation.
10	CBEIM	R/W	0	GPTM CaptureB Event Interrupt Mask The `CBEIM` values are defined as follows: Value Description 0 Interrupt is disabled. 1 Interrupt is enabled.
9	CBMIM	R/W	0	GPTM CaptureB Match Interrupt Mask The `CBMIM` values are defined as follows: Value Description 0 Interrupt is disabled. 1 Interrupt is enabled.
8	TBTOIM	R/W	0	GPTM TimerB Time-Out Interrupt Mask The `TBTOIM` values are defined as follows: Value Description 0 Interrupt is disabled. 1 Interrupt is enabled.
7:4	reserved	RO	0	Software should not rely on the value of a reserved bit. To provide compatibility with future products, the value of a reserved bit should be preserved across a read-modify-write operation.

Bit/Field	Name	Type	Reset	Description
3	RTCIM	R/W	0	GPTM RTC Interrupt Mask The `RTCIM` values are defined as follows: Value Description 0 Interrupt is disabled. 1 Interrupt is enabled.
2	CAEIM	R/W	0	GPTM CaptureA Event Interrupt Mask The `CAEIM` values are defined as follows: Value Description 0 Interrupt is disabled. 1 Interrupt is enabled.
1	CAMIM	R/W	0	GPTM CaptureA Match Interrupt Mask The `CAMIM` values are defined as follows: Value Description 0 Interrupt is disabled. 1 Interrupt is enabled.
0	TATOIM	R/W	0	GPTM TimerA Time-Out Interrupt Mask The `TATOIM` values are defined as follows: Value Description 0 Interrupt is disabled. 1 Interrupt is enabled.

Register 6: GPTM Raw Interrupt Status (GPTMRIS), offset 0x01C

This register shows the state of the GPTM's internal interrupt signal. These bits are set whether or not the interrupt is masked in the **GPTMIMR** register. Each bit can be cleared by writing a 1 to its corresponding bit in **GPTMICR**.

GPTM Raw Interrupt Status (GPTMRIS)

Timer0 base: 0x4003.0000
Timer1 base: 0x4003.1000
Timer2 base: 0x4003.2000
Timer3 base: 0x4003.3000
Offset 0x01C
Type RO, reset 0x0000.0000

	31	30	29	28	27	26	25	24	23	22	21	20	19	18	17	16
	reserved															
Type	RO	RO	RO	RO	RO	RO	RO	RO	RO	RO	RO	RO	RO	RO	RO	RO
Reset	0	0	0	0	0	0	0	0	0	0	0	0	0	0	0	0

	15	14	13	12	11	10	9	8	7	6	5	4	3	2	1	0
	reserved					CBERIS	CBMRIS	TBTORIS	reserved				RTCRIS	CAERIS	CAMRIS	TATORIS
Type	RO	RO	RO	RO	RO	RO	RO	RO	RO	RO	RO	RO	RO	RO	RO	RO
Reset	0	0	0	0	0	0	0	0	0	0	0	0	0	0	0	0

Bit/Field	Name	Type	Reset	Description
31:11	reserved	RO	0x00	Software should not rely on the value of a reserved bit. To provide compatibility with future products, the value of a reserved bit should be preserved across a read-modify-write operation.
10	CBERIS	RO	0	GPTM CaptureB Event Raw Interrupt This is the CaptureB Event interrupt status prior to masking.
9	CBMRIS	RO	0	GPTM CaptureB Match Raw Interrupt This is the CaptureB Match interrupt status prior to masking.
8	TBTORIS	RO	0	GPTM TimerB Time-Out Raw Interrupt This is the TimerB time-out interrupt status prior to masking.
7:4	reserved	RO	0x0	Software should not rely on the value of a reserved bit. To provide compatibility with future products, the value of a reserved bit should be preserved across a read-modify-write operation.
3	RTCRIS	RO	0	GPTM RTC Raw Interrupt This is the RTC Event interrupt status prior to masking.
2	CAERIS	RO	0	GPTM CaptureA Event Raw Interrupt This is the CaptureA Event interrupt status prior to masking.
1	CAMRIS	RO	0	GPTM CaptureA Match Raw Interrupt This is the CaptureA Match interrupt status prior to masking.
0	TATORIS	RO	0	GPTM TimerA Time-Out Raw Interrupt This the TimerA time-out interrupt status prior to masking.

Register 7: GPTM Masked Interrupt Status (GPTMMIS), offset 0x020

This register show the state of the GPTM's controller-level interrupt. If an interrupt is unmasked in **GPTMIMR**, and there is an event that causes the interrupt to be asserted, the corresponding bit is set in this register. All bits are cleared by writing a 1 to the corresponding bit in **GPTMICR**.

GPTM Masked Interrupt Status (GPTMMIS)

Timer0 base: 0x4003.0000
Timer1 base: 0x4003.1000
Timer2 base: 0x4003.2000
Timer3 base: 0x4003.3000
Offset 0x020
Type RO, reset 0x0000.0000

	31	30	29	28	27	26	25	24	23	22	21	20	19	18	17	16
	reserved															
Type	RO	RO	RO	RO	RO	RO	RO	RO	RO	RO	RO	RO	RO	RO	RO	RO
Reset	0	0	0	0	0	0	0	0	0	0	0	0	0	0	0	0

	15	14	13	12	11	10	9	8	7	6	5	4	3	2	1	0
	reserved					CBEMIS	CBMMIS	TBTOMIS	reserved				RTCMIS	CAEMIS	CAMMIS	TATOMIS
Type	RO	RO	RO	RO	RO	RO	RO	RO	RO	RO	RO	RO	RO	RO	RO	RO
Reset	0	0	0	0	0	0	0	0	0	0	0	0	0	0	0	0

Bit/Field	Name	Type	Reset	Description
31:11	reserved	RO	0x00	Software should not rely on the value of a reserved bit. To provide compatibility with future products, the value of a reserved bit should be preserved across a read-modify-write operation.
10	CBEMIS	RO	0	GPTM CaptureB Event Masked Interrupt This is the CaptureB event interrupt status after masking.
9	CBMMIS	RO	0	GPTM CaptureB Match Masked Interrupt This is the CaptureB match interrupt status after masking.
8	TBTOMIS	RO	0	GPTM TimerB Time-Out Masked Interrupt This is the TimerB time-out interrupt status after masking.
7:4	reserved	RO	0x0	Software should not rely on the value of a reserved bit. To provide compatibility with future products, the value of a reserved bit should be preserved across a read-modify-write operation.
3	RTCMIS	RO	0	GPTM RTC Masked Interrupt This is the RTC event interrupt status after masking.
2	CAEMIS	RO	0	GPTM CaptureA Event Masked Interrupt This is the CaptureA event interrupt status after masking.
1	CAMMIS	RO	0	GPTM CaptureA Match Masked Interrupt This is the CaptureA match interrupt status after masking.
0	TATOMIS	RO	0	GPTM TimerA Time-Out Masked Interrupt This is the TimerA time-out interrupt status after masking.

Register 8: GPTM Interrupt Clear (GPTMICR), offset 0x024

This register is used to clear the status bits in the **GPTMRIS** and **GPTMMIS** registers. Writing a 1 to a bit clears the corresponding bit in the **GPTMRIS** and **GPTMMIS** registers.

GPTM Interrupt Clear (GPTMICR)

Timer0 base: 0x4003.0000
Timer1 base: 0x4003.1000
Timer2 base: 0x4003.2000
Timer3 base: 0x4003.3000
Offset 0x024
Type W1C, reset 0x0000.0000

	31	30	29	28	27	26	25	24	23	22	21	20	19	18	17	16
	reserved															
Type	RO	RO	RO	RO	RO	RO	RO	RO	RO	RO	RO	RO	RO	RO	RO	RO
Reset	0	0	0	0	0	0	0	0	0	0	0	0	0	0	0	0

	15	14	13	12	11	10	9	8	7	6	5	4	3	2	1	0
	reserved					CBECINT	CBMCINT	TBTOCINT	reserved				RTCCINT	CAECINT	CAMCINT	TATOCINT
Type	RO	RO	RO	RO	RO	W1C	W1C	W1C	RO	RO	RO	RO	W1C	W1C	W1C	W1C
Reset	0	0	0	0	0	0	0	0	0	0	0	0	0	0	0	0

Bit/Field	Name	Type	Reset	Description
31:11	reserved	RO	0x00	Software should not rely on the value of a reserved bit. To provide compatibility with future products, the value of a reserved bit should be preserved across a read-modify-write operation.
10	CBECINT	W1C	0	GPTM CaptureB Event Interrupt Clear The `CBECINT` values are defined as follows: Value Description 0 The interrupt is unaffected. 1 The interrupt is cleared.
9	CBMCINT	W1C	0	GPTM CaptureB Match Interrupt Clear The `CBMCINT` values are defined as follows: Value Description 0 The interrupt is unaffected. 1 The interrupt is cleared.
8	TBTOCINT	W1C	0	GPTM TimerB Time-Out Interrupt Clear The `TBTOCINT` values are defined as follows: Value Description 0 The interrupt is unaffected. 1 The interrupt is cleared.
7:4	reserved	RO	0x0	Software should not rely on the value of a reserved bit. To provide compatibility with future products, the value of a reserved bit should be preserved across a read-modify-write operation.

Bit/Field	Name	Type	Reset	Description
3	RTCCINT	W1C	0	GPTM RTC Interrupt Clear The `RTCCINT` values are defined as follows: Value Description 0 The interrupt is unaffected. 1 The interrupt is cleared.
2	CAECINT	W1C	0	GPTM CaptureA Event Interrupt Clear The `CAECINT` values are defined as follows: Value Description 0 The interrupt is unaffected. 1 The interrupt is cleared.
1	CAMCINT	W1C	0	GPTM CaptureA Match Interrupt Clear The `CAMCINT` values are defined as follows: Value Description 0 The interrupt is unaffected. 1 The interrupt is cleared.
0	TATOCINT	W1C	0	GPTM TimerA Time-Out Interrupt Clear The `TATOCINT` values are defined as follows: Value Description 0 The interrupt is unaffected. 1 The interrupt is cleared.

Register 9: GPTM TimerA Interval Load (GPTMTAILR), offset 0x028

This register is used to load the starting count value into the timer. When GPTM is configured to one of the 32-bit modes, **GPTMTAILR** appears as a 32-bit register (the upper 16-bits correspond to the contents of the **GPTM TimerB Interval Load (GPTMTBILR)** register). In 16-bit mode, the upper 16 bits of this register read as 0s and have no effect on the state of **GPTMTBILR**.

GPTM TimerA Interval Load (GPTMTAILR)

Timer0 base: 0x4003.0000
Timer1 base: 0x4003.1000
Timer2 base: 0x4003.2000
Timer3 base: 0x4003.3000
Offset 0x028
Type R/W, reset 0xFFFF.FFFF

	31	30	29	28	27	26	25	24	23	22	21	20	19	18	17	16
	TAILRH															
Type	R/W	R/W	R/W	R/W	R/W	R/W	R/W	R/W	R/W	R/W	R/W	R/W	R/W	R/W	R/W	R/W
Reset	1	1	1	1	1	1	1	1	1	1	1	1	1	1	1	1

	15	14	13	12	11	10	9	8	7	6	5	4	3	2	1	0
	TAILRL															
Type	R/W	R/W	R/W	R/W	R/W	R/W	R/W	R/W	R/W	R/W	R/W	R/W	R/W	R/W	R/W	R/W
Reset	1	1	1	1	1	1	1	1	1	1	1	1	1	1	1	1

Bit/Field	Name	Type	Reset	Description
31:16	TAILRH	R/W	0xFFFF	GPTM TimerA Interval Load Register High When configured for 32-bit mode via the **GPTMCFG** register, the **GPTM TimerB Interval Load (GPTMTBILR)** register loads this value on a write. A read returns the current value of **GPTMTBILR**. In 16-bit mode, this field reads as 0 and does not have an effect on the state of **GPTMTBILR**.
15:0	TAILRL	R/W	0xFFFF	GPTM TimerA Interval Load Register Low For both 16- and 32-bit modes, writing this field loads the counter for TimerA. A read returns the current value of **GPTMTAILR**.

Register 10: GPTM TimerB Interval Load (GPTMTBILR), offset 0x02C

This register is used to load the starting count value into TimerB. When the GPTM is configured to a 32-bit mode, **GPTMTBILR** returns the current value of TimerB and ignores writes.

GPTM TimerB Interval Load (GPTMTBILR)

Timer0 base: 0x4003.0000
Timer1 base: 0x4003.1000
Timer2 base: 0x4003.2000
Timer3 base: 0x4003.3000
Offset 0x02C
Type R/W, reset 0x0000.FFFF

	31	30	29	28	27	26	25	24	23	22	21	20	19	18	17	16
	reserved															
Type	RO	RO	RO	RO	RO	RO	RO	RO	RO	RO	RO	RO	RO	RO	RO	RO
Reset	0	0	0	0	0	0	0	0	0	0	0	0	0	0	0	0

	15	14	13	12	11	10	9	8	7	6	5	4	3	2	1	0
	TBILRL															
Type	R/W	R/W	R/W	R/W	R/W	R/W	R/W	R/W	R/W	R/W	R/W	R/W	R/W	R/W	R/W	R/W
Reset	1	1	1	1	1	1	1	1	1	1	1	1	1	1	1	1

Bit/Field	Name	Type	Reset	Description
31:16	reserved	RO	0x0000	Software should not rely on the value of a reserved bit. To provide compatibility with future products, the value of a reserved bit should be preserved across a read-modify-write operation.
15:0	TBILRL	R/W	0xFFFF	GPTM TimerB Interval Load Register When the GPTM is not configured as a 32-bit timer, a write to this field updates **GPTMTBILR**. In 32-bit mode, writes are ignored, and reads return the current value of **GPTMTBILR**.

Register 11: GPTM TimerA Match (GPTMTAMATCHR), offset 0x030

This register is used in 32-bit Real-Time Clock mode and 16-bit PWM and Input Edge Count modes.

GPTM TimerA Match (GPTMTAMATCHR)

Timer0 base: 0x4003.0000
Timer1 base: 0x4003.1000
Timer2 base: 0x4003.2000
Timer3 base: 0x4003.3000
Offset 0x030
Type R/W, reset 0xFFFF.FFFF

	31	30	29	28	27	26	25	24	23	22	21	20	19	18	17	16
	TAMRH															
Type	R/W	R/W	R/W	R/W	R/W	R/W	R/W	R/W	R/W	R/W	R/W	R/W	R/W	R/W	R/W	R/W
Reset	1	1	1	1	1	1	1	1	1	1	1	1	1	1	1	1

	15	14	13	12	11	10	9	8	7	6	5	4	3	2	1	0
	TAMRL															
Type	R/W	R/W	R/W	R/W	R/W	R/W	R/W	R/W	R/W	R/W	R/W	R/W	R/W	R/W	R/W	R/W
Reset	1	1	1	1	1	1	1	1	1	1	1	1	1	1	1	1

Bit/Field	Name	Type	Reset	Description
31:16	TAMRH	R/W	0xFFFF	GPTM TimerA Match Register High When configured for 32-bit Real-Time Clock (RTC) mode via the **GPTMCFG** register, this value is compared to the upper half of **GPTMTAR**, to determine match events. In 16-bit mode, this field reads as 0 and does not have an effect on the state of **GPTMTBMATCHR**.
15:0	TAMRL	R/W	0xFFFF	GPTM TimerA Match Register Low When configured for 32-bit Real-Time Clock (RTC) mode via the **GPTMCFG** register, this value is compared to the lower half of **GPTMTAR**, to determine match events. When configured for PWM mode, this value along with **GPTMTAILR**, determines the duty cycle of the output PWM signal. When configured for Edge Count mode, this value along with **GPTMTAILR**, determines how many edge events are counted. The total number of edge events counted is equal to the value in **GPTMTAILR** minus this value.

Register 12: GPTM TimerB Match (GPTMTBMATCHR), offset 0x034

This register is used in 16-bit PWM and Input Edge Count modes.

GPTM TimerB Match (GPTMTBMATCHR)

Timer0 base: 0x4003.0000
Timer1 base: 0x4003.1000
Timer2 base: 0x4003.2000
Timer3 base: 0x4003.3000
Offset 0x034
Type R/W, reset 0x0000.FFFF

	31	30	29	28	27	26	25	24	23	22	21	20	19	18	17	16
	reserved															
Type	RO	RO	RO	RO	RO	RO	RO	RO	RO	RO	RO	RO	RO	RO	RO	RO
Reset	0	0	0	0	0	0	0	0	0	0	0	0	0	0	0	0

	15	14	13	12	11	10	9	8	7	6	5	4	3	2	1	0
	TBMRL															
Type	R/W	R/W	R/W	R/W	R/W	R/W	R/W	R/W	R/W	R/W	R/W	R/W	R/W	R/W	R/W	R/W
Reset	1	1	1	1	1	1	1	1	1	1	1	1	1	1	1	1

Bit/Field	Name	Type	Reset	Description
31:16	reserved	RO	0x0000	Software should not rely on the value of a reserved bit. To provide compatibility with future products, the value of a reserved bit should be preserved across a read-modify-write operation.
15:0	TBMRL	R/W	0xFFFF	GPTM TimerB Match Register Low When configured for PWM mode, this value along with **GPTMTBILR**, determines the duty cycle of the output PWM signal. When configured for Edge Count mode, this value along with **GPTMTBILR**, determines how many edge events are counted. The total number of edge events counted is equal to the value in **GPTMTBILR** minus this value.

Register 13: GPTM TimerA Prescale (GPTMTAPR), offset 0x038

This register allows software to extend the range of the 16-bit timers when operating in one-shot or periodic mode.

GPTM TimerA Prescale (GPTMTAPR)

Timer0 base: 0x4003.0000
Timer1 base: 0x4003.1000
Timer2 base: 0x4003.2000
Timer3 base: 0x4003.3000
Offset 0x038
Type R/W, reset 0x0000.0000

	31	30	29	28	27	26	25	24	23	22	21	20	19	18	17	16
	reserved															
Type	RO	RO	RO	RO	RO	RO	RO	RO	RO	RO	RO	RO	RO	RO	RO	RO
Reset	0	0	0	0	0	0	0	0	0	0	0	0	0	0	0	0

	15	14	13	12	11	10	9	8	7	6	5	4	3	2	1	0
	reserved								TAPSR							
Type	RO	RO	RO	RO	RO	RO	RO	RO	R/W	R/W	R/W	R/W	R/W	R/W	R/W	R/W
Reset	0	0	0	0	0	0	0	0	0	0	0	0	0	0	0	0

Bit/Field	Name	Type	Reset	Description
31:8	reserved	RO	0x00	Software should not rely on the value of a reserved bit. To provide compatibility with future products, the value of a reserved bit should be preserved across a read-modify-write operation.
7:0	TAPSR	R/W	0x00	GPTM TimerA Prescale The register loads this value on a write. A read returns the current value of the register. Refer to Table 9-4 on page 330 for more details and an example.

Register 14: GPTM TimerB Prescale (GPTMTBPR), offset 0x03C

This register allows software to extend the range of the 16-bit timers when operating in one-shot or periodic mode.

GPTM TimerB Prescale (GPTMTBPR)

Timer0 base: 0x4003.0000
Timer1 base: 0x4003.1000
Timer2 base: 0x4003.2000
Timer3 base: 0x4003.3000
Offset 0x03C
Type R/W, reset 0x0000.0000

	31	30	29	28	27	26	25	24	23	22	21	20	19	18	17	16
	reserved															
Type	RO	RO	RO	RO	RO	RO	RO	RO	RO	RO	RO	RO	RO	RO	RO	RO
Reset	0	0	0	0	0	0	0	0	0	0	0	0	0	0	0	0

	15	14	13	12	11	10	9	8	7	6	5	4	3	2	1	0
	reserved								TBPSR							
Type	RO	RO	RO	RO	RO	RO	RO	RO	R/W	R/W	R/W	R/W	R/W	R/W	R/W	R/W
Reset	0	0	0	0	0	0	0	0	0	0	0	0	0	0	0	0

Bit/Field	Name	Type	Reset	Description
31:8	reserved	RO	0x00	Software should not rely on the value of a reserved bit. To provide compatibility with future products, the value of a reserved bit should be preserved across a read-modify-write operation.
7:0	TBPSR	R/W	0x00	GPTM TimerB Prescale The register loads this value on a write. A read returns the current value of this register. Refer to Table 9-4 on page 330 for more details and an example.

Register 15: GPTM TimerA Prescale Match (GPTMTAPMR), offset 0x040

This register effectively extends the range of **GPTMTAMATCHR** to 24 bits when operating in 16-bit one-shot or periodic mode.

GPTM TimerA Prescale Match (GPTMTAPMR)

Timer0 base: 0x4003.0000
Timer1 base: 0x4003.1000
Timer2 base: 0x4003.2000
Timer3 base: 0x4003.3000
Offset 0x040
Type R/W, reset 0x0000.0000

	31	30	29	28	27	26	25	24	23	22	21	20	19	18	17	16
	reserved															
Type	RO	RO	RO	RO	RO	RO	RO	RO	RO	RO	RO	RO	RO	RO	RO	RO
Reset	0	0	0	0	0	0	0	0	0	0	0	0	0	0	0	0

	15	14	13	12	11	10	9	8	7	6	5	4	3	2	1	0
	reserved								TAPSMR							
Type	RO	RO	RO	RO	RO	RO	RO	RO	R/W	R/W	R/W	R/W	R/W	R/W	R/W	R/W
Reset	0	0	0	0	0	0	0	0	0	0	0	0	0	0	0	0

Bit/Field	Name	Type	Reset	Description
31:8	reserved	RO	0x00	Software should not rely on the value of a reserved bit. To provide compatibility with future products, the value of a reserved bit should be preserved across a read-modify-write operation.
7:0	TAPSMR	R/W	0x00	GPTM TimerA Prescale Match This value is used alongside **GPTMTAMATCHR** to detect timer match events while using a prescaler.

Register 16: GPTM TimerB Prescale Match (GPTMTBPMR), offset 0x044

This register effectively extends the range of **GPTMTBMATCHR** to 24 bits when operating in 16-bit one-shot or periodic mode.

GPTM TimerB Prescale Match (GPTMTBPMR)

Timer0 base: 0x4003.0000
Timer1 base: 0x4003.1000
Timer2 base: 0x4003.2000
Timer3 base: 0x4003.3000
Offset 0x044
Type R/W, reset 0x0000.0000

	31	30	29	28	27	26	25	24	23	22	21	20	19	18	17	16
	reserved															
Type	RO	RO	RO	RO	RO	RO	RO	RO	RO	RO	RO	RO	RO	RO	RO	RO
Reset	0	0	0	0	0	0	0	0	0	0	0	0	0	0	0	0

	15	14	13	12	11	10	9	8	7	6	5	4	3	2	1	0
	reserved								TBPSMR							
Type	RO	RO	RO	RO	RO	RO	RO	RO	R/W	R/W	R/W	R/W	R/W	R/W	R/W	R/W
Reset	0	0	0	0	0	0	0	0	0	0	0	0	0	0	0	0

Bit/Field	Name	Type	Reset	Description
31:8	reserved	RO	0x00	Software should not rely on the value of a reserved bit. To provide compatibility with future products, the value of a reserved bit should be preserved across a read-modify-write operation.
7:0	TBPSMR	R/W	0x00	GPTM TimerB Prescale Match This value is used alongside **GPTMTBMATCHR** to detect timer match events while using a prescaler.

Register 17: GPTM TimerA (GPTMTAR), offset 0x048

This register shows the current value of the TimerA counter in all cases except for Input Edge Count mode. When in this mode, this register contains the number of edges that have occurred.

GPTM TimerA (GPTMTAR)

Timer0 base: 0x4003.0000
Timer1 base: 0x4003.1000
Timer2 base: 0x4003.2000
Timer3 base: 0x4003.3000
Offset 0x048
Type RO, reset 0xFFFF.FFFF

	31	30	29	28	27	26	25	24	23	22	21	20	19	18	17	16
	TARH															
Type	RO	RO	RO	RO	RO	RO	RO	RO	RO	RO	RO	RO	RO	RO	RO	RO
Reset	1	1	1	1	1	1	1	1	1	1	1	1	1	1	1	1

	15	14	13	12	11	10	9	8	7	6	5	4	3	2	1	0
	TARL															
Type	RO	RO	RO	RO	RO	RO	RO	RO	RO	RO	RO	RO	RO	RO	RO	RO
Reset	1	1	1	1	1	1	1	1	1	1	1	1	1	1	1	1

Bit/Field	Name	Type	Reset	Description
31:16	TARH	RO	0xFFFF	GPTM TimerA Register High If the **GPTMCFG** is in a 32-bit mode, TimerB value is read. If the **GPTMCFG** is in a 16-bit mode, this is read as zero.
15:0	TARL	RO	0xFFFF	GPTM TimerA Register Low A read returns the current value of the **GPTM TimerA Count Register**, except in Input Edge-Count mode, when it returns the number of edges that have occurred.

Register 18: GPTM TimerB (GPTMTBR), offset 0x04C

This register shows the current value of the TimerB counter in all cases except for Input Edge Count mode. When in this mode, this register contains the number of edges that have occurred.

GPTM TimerB (GPTMTBR)

Timer0 base: 0x4003.0000
Timer1 base: 0x4003.1000
Timer2 base: 0x4003.2000
Timer3 base: 0x4003.3000
Offset 0x04C
Type RO, reset 0x0000.FFFF

	31	30	29	28	27	26	25	24	23	22	21	20	19	18	17	16
	reserved															
Type	RO	RO	RO	RO	RO	RO	RO	RO	RO	RO	RO	RO	RO	RO	RO	RO
Reset	0	0	0	0	0	0	0	0	0	0	0	0	0	0	0	0

	15	14	13	12	11	10	9	8	7	6	5	4	3	2	1	0
	TBRL															
Type	RO	RO	RO	RO	RO	RO	RO	RO	RO	RO	RO	RO	RO	RO	RO	RO
Reset	1	1	1	1	1	1	1	1	1	1	1	1	1	1	1	1

Bit/Field	Name	Type	Reset	Description
31:16	reserved	RO	0x0000	Software should not rely on the value of a reserved bit. To provide compatibility with future products, the value of a reserved bit should be preserved across a read-modify-write operation.
15:0	TBRL	RO	0xFFFF	GPTM TimerB A read returns the current value of the **GPTM TimerB Count Register**, except in Input Edge-Count mode, when it returns the number of edges that have occurred.

10 Watchdog Timer

A watchdog timer can generate nonmaskable interrupts (NMIs) or a reset when a time-out value is reached. The watchdog timer is used to regain control when a system has failed due to a software error or due to the failure of an external device to respond in the expected way.

The Stellaris® Watchdog Timer module has the following features:

- 32-bit down counter with a programmable load register
- Separate watchdog clock with an enable
- Programmable interrupt generation logic with interrupt masking
- Lock register protection from runaway software
- Reset generation logic with an enable/disable
- User-enabled stalling when the controller asserts the CPU Halt flag during debug

The Watchdog Timer can be configured to generate an interrupt to the controller on its first time-out, and to generate a reset signal on its second time-out. Once the Watchdog Timer has been configured, the lock register can be written to prevent the timer configuration from being inadvertently altered.

10.1 Block Diagram

Figure 10-1. WDT Module Block Diagram

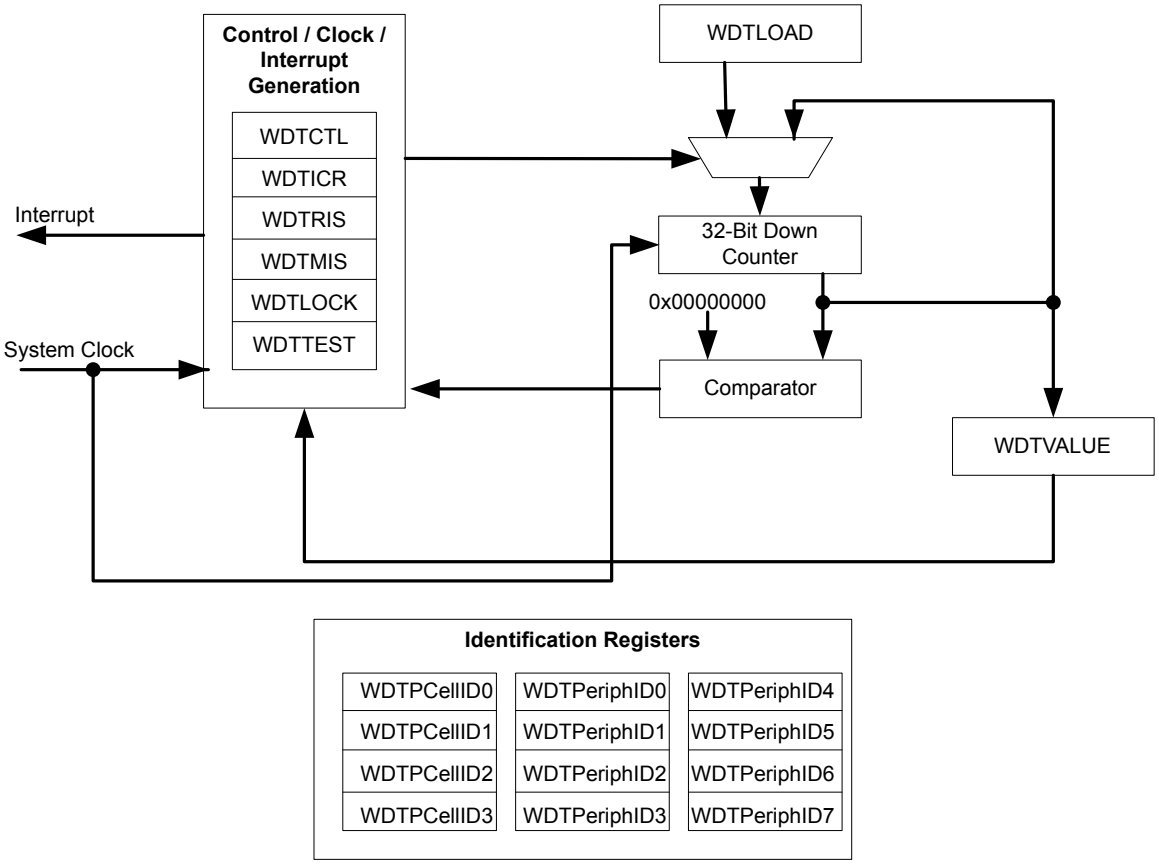

10.2 Functional Description

The Watchdog Timer module generates the first time-out signal when the 32-bit counter reaches the zero state after being enabled; enabling the counter also enables the watchdog timer interrupt. After the first time-out event, the 32-bit counter is re-loaded with the value of the **Watchdog Timer Load (WDTLOAD)** register, and the timer resumes counting down from that value. Once the Watchdog Timer has been configured, the **Watchdog Timer Lock (WDTLOCK)** register is written, which prevents the timer configuration from being inadvertently altered by software.

If the timer counts down to its zero state again before the first time-out interrupt is cleared, and the reset signal has been enabled (via the `WatchdogResetEnable` function), the Watchdog timer asserts its reset signal to the system. If the interrupt is cleared before the 32-bit counter reaches its second time-out, the 32-bit counter is loaded with the value in the **WDTLOAD** register, and counting resumes from that value.

If **WDTLOAD** is written with a new value while the Watchdog Timer counter is counting, then the counter is loaded with the new value and continues counting.

Writing to **WDTLOAD** does not clear an active interrupt. An interrupt must be specifically cleared by writing to the **Watchdog Interrupt Clear (WDTICR)** register.

The Watchdog module interrupt and reset generation can be enabled or disabled as required. When the interrupt is re-enabled, the 32-bit counter is preloaded with the load register value and not its last state.

10.3 Initialization and Configuration

To use the WDT, its peripheral clock must be enabled by setting the `WDT` bit in the **RCGC0** register. The Watchdog Timer is configured using the following sequence:

1. Load the **WDTLOAD** register with the desired timer load value.
2. If the Watchdog is configured to trigger system resets, set the `RESEN` bit in the **WDTCTL** register.
3. Set the `INTEN` bit in the **WDTCTL** register to enable the Watchdog and lock the control register.

If software requires that all of the watchdog registers are locked, the Watchdog Timer module can be fully locked by writing any value to the **WDTLOCK** register. To unlock the Watchdog Timer, write a value of 0x1ACC.E551.

10.4 Register Map

Table 10-1 on page 365 lists the Watchdog registers. The offset listed is a hexadecimal increment to the register's address, relative to the Watchdog Timer base address of 0x4000.0000.

Table 10-1. Watchdog Timer Register Map

Offset	Name	Type	Reset	Description	See page
0x000	WDTLOAD	R/W	0xFFFF.FFFF	Watchdog Load	367
0x004	WDTVALUE	RO	0xFFFF.FFFF	Watchdog Value	368
0x008	WDTCTL	R/W	0x0000.0000	Watchdog Control	369
0x00C	WDTICR	WO	-	Watchdog Interrupt Clear	370
0x010	WDTRIS	RO	0x0000.0000	Watchdog Raw Interrupt Status	371
0x014	WDTMIS	RO	0x0000.0000	Watchdog Masked Interrupt Status	372
0x418	WDTTEST	R/W	0x0000.0000	Watchdog Test	373
0xC00	WDTLOCK	R/W	0x0000.0000	Watchdog Lock	374
0xFD0	WDTPeriphID4	RO	0x0000.0000	Watchdog Peripheral Identification 4	375
0xFD4	WDTPeriphID5	RO	0x0000.0000	Watchdog Peripheral Identification 5	376
0xFD8	WDTPeriphID6	RO	0x0000.0000	Watchdog Peripheral Identification 6	377
0xFDC	WDTPeriphID7	RO	0x0000.0000	Watchdog Peripheral Identification 7	378
0xFE0	WDTPeriphID0	RO	0x0000.0005	Watchdog Peripheral Identification 0	379
0xFE4	WDTPeriphID1	RO	0x0000.0018	Watchdog Peripheral Identification 1	380
0xFE8	WDTPeriphID2	RO	0x0000.0018	Watchdog Peripheral Identification 2	381

Table 10-1. Watchdog Timer Register Map *(continued)*

Offset	Name	Type	Reset	Description	See page
0xFEC	WDTPeriphID3	RO	0x0000.0001	Watchdog Peripheral Identification 3	382
0xFF0	WDTPCellID0	RO	0x0000.000D	Watchdog PrimeCell Identification 0	383
0xFF4	WDTPCellID1	RO	0x0000.00F0	Watchdog PrimeCell Identification 1	384
0xFF8	WDTPCellID2	RO	0x0000.0005	Watchdog PrimeCell Identification 2	385
0xFFC	WDTPCellID3	RO	0x0000.00B1	Watchdog PrimeCell Identification 3	386

10.5 Register Descriptions

The remainder of this section lists and describes the WDT registers, in numerical order by address offset.

Register 1: Watchdog Load (WDTLOAD), offset 0x000

This register is the 32-bit interval value used by the 32-bit counter. When this register is written, the value is immediately loaded and the counter restarts counting down from the new value. If the **WDTLOAD** register is loaded with 0x0000.0000, an interrupt is immediately generated.

Watchdog Load (WDTLOAD)

Base 0x4000.0000
Offset 0x000
Type R/W, reset 0xFFFF.FFFF

	31	30	29	28	27	26	25	24	23	22	21	20	19	18	17	16
	WDTLoad															
Type	R/W	R/W	R/W	R/W	R/W	R/W	R/W	R/W	R/W	R/W	R/W	R/W	R/W	R/W	R/W	R/W
Reset	1	1	1	1	1	1	1	1	1	1	1	1	1	1	1	1

	15	14	13	12	11	10	9	8	7	6	5	4	3	2	1	0
	WDTLoad															
Type	R/W	R/W	R/W	R/W	R/W	R/W	R/W	R/W	R/W	R/W	R/W	R/W	R/W	R/W	R/W	R/W
Reset	1	1	1	1	1	1	1	1	1	1	1	1	1	1	1	1

Bit/Field	Name	Type	Reset	Description
31:0	WDTLoad	R/W	0xFFFF.FFFF	Watchdog Load Value

Register 2: Watchdog Value (WDTVALUE), offset 0x004

This register contains the current count value of the timer.

Watchdog Value (WDTVALUE)

Base 0x4000.0000
Offset 0x004
Type RO, reset 0xFFFF.FFFF

	31	30	29	28	27	26	25	24	23	22	21	20	19	18	17	16
	WDTValue															
Type	RO	RO	RO	RO	RO	RO	RO	RO	RO	RO	RO	RO	RO	RO	RO	RO
Reset	1	1	1	1	1	1	1	1	1	1	1	1	1	1	1	1

	15	14	13	12	11	10	9	8	7	6	5	4	3	2	1	0
	WDTValue															
Type	RO	RO	RO	RO	RO	RO	RO	RO	RO	RO	RO	RO	RO	RO	RO	RO
Reset	1	1	1	1	1	1	1	1	1	1	1	1	1	1	1	1

Bit/Field	Name	Type	Reset	Description
31:0	WDTValue	RO	0xFFFF.FFFF	Watchdog Value Current value of the 32-bit down counter.

Register 3: Watchdog Control (WDTCTL), offset 0x008

This register is the watchdog control register. The watchdog timer can be configured to generate a reset signal (on second time-out) or an interrupt on time-out.

When the watchdog interrupt has been enabled, all subsequent writes to the control register are ignored. The only mechanism that can re-enable writes is a hardware reset.

Watchdog Control (WDTCTL)

Base 0x4000.0000
Offset 0x008
Type R/W, reset 0x0000.0000

	31	30	29	28	27	26	25	24	23	22	21	20	19	18	17	16
	reserved															
Type	RO	RO	RO	RO	RO	RO	RO	RO	RO	RO	RO	RO	RO	RO	RO	RO
Reset	0	0	0	0	0	0	0	0	0	0	0	0	0	0	0	0

	15	14	13	12	11	10	9	8	7	6	5	4	3	2	1	0
	reserved														RESEN	INTEN
Type	RO	RO	RO	RO	RO	RO	RO	RO	RO	RO	RO	RO	RO	RO	R/W	R/W
Reset	0	0	0	0	0	0	0	0	0	0	0	0	0	0	0	0

Bit/Field	Name	Type	Reset	Description
31:2	reserved	RO	0x00	Software should not rely on the value of a reserved bit. To provide compatibility with future products, the value of a reserved bit should be preserved across a read-modify-write operation.
1	RESEN	R/W	0	Watchdog Reset Enable The `RESEN` values are defined as follows: Value Description 0 Disabled. 1 Enable the Watchdog module reset output.
0	INTEN	R/W	0	Watchdog Interrupt Enable The `INTEN` values are defined as follows: Value Description 0 Interrupt event disabled (once this bit is set, it can only be cleared by a hardware reset). 1 Interrupt event enabled. Once enabled, all writes are ignored.

Register 4: Watchdog Interrupt Clear (WDTICR), offset 0x00C

This register is the interrupt clear register. A write of any value to this register clears the Watchdog interrupt and reloads the 32-bit counter from the **WDTLOAD** register. Value for a read or reset is indeterminate.

Watchdog Interrupt Clear (WDTICR)

Base 0x4000.0000
Offset 0x00C
Type WO, reset -

	31	30	29	28	27	26	25	24	23	22	21	20	19	18	17	16
	WDTIntClr															
Type	WO	WO	WO	WO	WO	WO	WO	WO	WO	WO	WO	WO	WO	WO	WO	WO
Reset	-	-	-	-	-	-	-	-	-	-	-	-	-	-	-	-

	15	14	13	12	11	10	9	8	7	6	5	4	3	2	1	0
	WDTIntClr															
Type	WO	WO	WO	WO	WO	WO	WO	WO	WO	WO	WO	WO	WO	WO	WO	WO
Reset	-	-	-	-	-	-	-	-	-	-	-	-	-	-	-	-

Bit/Field	Name	Type	Reset	Description
31:0	WDTIntClr	WO	-	Watchdog Interrupt Clear

Register 5: Watchdog Raw Interrupt Status (WDTRIS), offset 0x010

This register is the raw interrupt status register. Watchdog interrupt events can be monitored via this register if the controller interrupt is masked.

Watchdog Raw Interrupt Status (WDTRIS)

Base 0x4000.0000
Offset 0x010
Type RO, reset 0x0000.0000

	31	30	29	28	27	26	25	24	23	22	21	20	19	18	17	16
	reserved															
Type	RO	RO	RO	RO	RO	RO	RO	RO	RO	RO	RO	RO	RO	RO	RO	RO
Reset	0	0	0	0	0	0	0	0	0	0	0	0	0	0	0	0

	15	14	13	12	11	10	9	8	7	6	5	4	3	2	1	0
	reserved															WDTRIS
Type	RO	RO	RO	RO	RO	RO	RO	RO	RO	RO	RO	RO	RO	RO	RO	RO
Reset	0	0	0	0	0	0	0	0	0	0	0	0	0	0	0	0

Bit/Field	Name	Type	Reset	Description
31:1	reserved	RO	0x00	Software should not rely on the value of a reserved bit. To provide compatibility with future products, the value of a reserved bit should be preserved across a read-modify-write operation.
0	WDTRIS	RO	0	Watchdog Raw Interrupt Status Gives the raw interrupt state (prior to masking) of **WDTINTR**.

Register 6: Watchdog Masked Interrupt Status (WDTMIS), offset 0x014

This register is the masked interrupt status register. The value of this register is the logical AND of the raw interrupt bit and the Watchdog interrupt enable bit.

Watchdog Masked Interrupt Status (WDTMIS)

Base 0x4000.0000
Offset 0x014
Type RO, reset 0x0000.0000

	31	30	29	28	27	26	25	24	23	22	21	20	19	18	17	16
	reserved															
Type	RO	RO	RO	RO	RO	RO	RO	RO	RO	RO	RO	RO	RO	RO	RO	RO
Reset	0	0	0	0	0	0	0	0	0	0	0	0	0	0	0	0

	15	14	13	12	11	10	9	8	7	6	5	4	3	2	1	0
	reserved															WDTMIS
Type	RO	RO	RO	RO	RO	RO	RO	RO	RO	RO	RO	RO	RO	RO	RO	RO
Reset	0	0	0	0	0	0	0	0	0	0	0	0	0	0	0	0

Bit/Field	Name	Type	Reset	Description
31:1	reserved	RO	0x00	Software should not rely on the value of a reserved bit. To provide compatibility with future products, the value of a reserved bit should be preserved across a read-modify-write operation.
0	WDTMIS	RO	0	Watchdog Masked Interrupt Status Gives the masked interrupt state (after masking) of the **WDTINTR** interrupt.

Register 7: Watchdog Test (WDTTEST), offset 0x418

This register provides user-enabled stalling when the microcontroller asserts the CPU halt flag during debug.

Watchdog Test (WDTTEST)

Base 0x4000.0000
Offset 0x418
Type R/W, reset 0x0000.0000

	31	30	29	28	27	26	25	24	23	22	21	20	19	18	17	16
	reserved															
Type	RO	RO	RO	RO	RO	RO	RO	RO	RO	RO	RO	RO	RO	RO	RO	RO
Reset	0	0	0	0	0	0	0	0	0	0	0	0	0	0	0	0

	15	14	13	12	11	10	9	8	7	6	5	4	3	2	1	0
	reserved							STALL	reserved							
Type	RO	RO	RO	RO	RO	RO	RO	R/W	RO	RO	RO	RO	RO	RO	RO	RO
Reset	0	0	0	0	0	0	0	0	0	0	0	0	0	0	0	0

Bit/Field	Name	Type	Reset	Description
31:9	reserved	RO	0x00	Software should not rely on the value of a reserved bit. To provide compatibility with future products, the value of a reserved bit should be preserved across a read-modify-write operation.
8	STALL	R/W	0	Watchdog Stall Enable When set to 1, if the Stellaris microcontroller is stopped with a debugger, the watchdog timer stops counting. Once the microcontroller is restarted, the watchdog timer resumes counting.
7:0	reserved	RO	0x00	Software should not rely on the value of a reserved bit. To provide compatibility with future products, the value of a reserved bit should be preserved across a read-modify-write operation.

Register 8: Watchdog Lock (WDTLOCK), offset 0xC00

Writing 0x1ACC.E551 to the **WDTLOCK** register enables write access to all other registers. Writing any other value to the **WDTLOCK** register re-enables the locked state for register writes to all the other registers. Reading the **WDTLOCK** register returns the lock status rather than the 32-bit value written. Therefore, when write accesses are disabled, reading the **WDTLOCK** register returns 0x0000.0001 (when locked; otherwise, the returned value is 0x0000.0000 (unlocked)).

Watchdog Lock (WDTLOCK)

Base 0x4000.0000
Offset 0xC00
Type R/W, reset 0x0000.0000

	31	30	29	28	27	26	25	24	23	22	21	20	19	18	17	16
	WDTLock															
Type	R/W	R/W	R/W	R/W	R/W	R/W	R/W	R/W	R/W	R/W	R/W	R/W	R/W	R/W	R/W	R/W
Reset	0	0	0	0	0	0	0	0	0	0	0	0	0	0	0	0

	15	14	13	12	11	10	9	8	7	6	5	4	3	2	1	0
	WDTLock															
Type	R/W	R/W	R/W	R/W	R/W	R/W	R/W	R/W	R/W	R/W	R/W	R/W	R/W	R/W	R/W	R/W
Reset	0	0	0	0	0	0	0	0	0	0	0	0	0	0	0	0

Bit/Field	Name	Type	Reset	Description
31:0	WDTLock	R/W	0x0000	Watchdog Lock A write of the value 0x1ACC.E551 unlocks the watchdog registers for write access. A write of any other value reapplies the lock, preventing any register updates. A read of this register returns the following values: Value — Description 0x0000.0001 — Locked 0x0000.0000 — Unlocked

Register 9: Watchdog Peripheral Identification 4 (WDTPeriphID4), offset 0xFD0

The **WDTPeriphIDn** registers are hard-coded and the fields within the register determine the reset value.

Watchdog Peripheral Identification 4 (WDTPeriphID4)

Base 0x4000.0000
Offset 0xFD0
Type RO, reset 0x0000.0000

	31	30	29	28	27	26	25	24	23	22	21	20	19	18	17	16
	reserved															
Type	RO	RO	RO	RO	RO	RO	RO	RO	RO	RO	RO	RO	RO	RO	RO	RO
Reset	0	0	0	0	0	0	0	0	0	0	0	0	0	0	0	0

	15	14	13	12	11	10	9	8	7	6	5	4	3	2	1	0
	reserved								PID4							
Type	RO	RO	RO	RO	RO	RO	RO	RO	RO	RO	RO	RO	RO	RO	RO	RO
Reset	0	0	0	0	0	0	0	0	0	0	0	0	0	0	0	0

Bit/Field	Name	Type	Reset	Description
31:8	reserved	RO	0x00	Software should not rely on the value of a reserved bit. To provide compatibility with future products, the value of a reserved bit should be preserved across a read-modify-write operation.
7:0	PID4	RO	0x00	WDT Peripheral ID Register[7:0]

Register 10: Watchdog Peripheral Identification 5 (WDTPeriphID5), offset 0xFD4

The **WDTPeriphIDn** registers are hard-coded and the fields within the register determine the reset value.

Watchdog Peripheral Identification 5 (WDTPeriphID5)

Base 0x4000.0000
Offset 0xFD4
Type RO, reset 0x0000.0000

	31	30	29	28	27	26	25	24	23	22	21	20	19	18	17	16
	reserved															
Type	RO	RO	RO	RO	RO	RO	RO	RO	RO	RO	RO	RO	RO	RO	RO	RO
Reset	0	0	0	0	0	0	0	0	0	0	0	0	0	0	0	0

	15	14	13	12	11	10	9	8	7	6	5	4	3	2	1	0
	reserved								PID5							
Type	RO	RO	RO	RO	RO	RO	RO	RO	RO	RO	RO	RO	RO	RO	RO	RO
Reset	0	0	0	0	0	0	0	0	0	0	0	0	0	0	0	0

Bit/Field	Name	Type	Reset	Description
31:8	reserved	RO	0x00	Software should not rely on the value of a reserved bit. To provide compatibility with future products, the value of a reserved bit should be preserved across a read-modify-write operation.
7:0	PID5	RO	0x00	WDT Peripheral ID Register[15:8]

Register 11: Watchdog Peripheral Identification 6 (WDTPeriphID6), offset 0xFD8

The **WDTPeriphIDn** registers are hard-coded and the fields within the register determine the reset value.

Watchdog Peripheral Identification 6 (WDTPeriphID6)

Base 0x4000.0000
Offset 0xFD8
Type RO, reset 0x0000.0000

	31	30	29	28	27	26	25	24	23	22	21	20	19	18	17	16
	reserved															
Type	RO	RO	RO	RO	RO	RO	RO	RO	RO	RO	RO	RO	RO	RO	RO	RO
Reset	0	0	0	0	0	0	0	0	0	0	0	0	0	0	0	0

	15	14	13	12	11	10	9	8	7	6	5	4	3	2	1	0
	reserved								PID6							
Type	RO	RO	RO	RO	RO	RO	RO	RO	RO	RO	RO	RO	RO	RO	RO	RO
Reset	0	0	0	0	0	0	0	0	0	0	0	0	0	0	0	0

Bit/Field	Name	Type	Reset	Description
31:8	reserved	RO	0x00	Software should not rely on the value of a reserved bit. To provide compatibility with future products, the value of a reserved bit should be preserved across a read-modify-write operation.
7:0	PID6	RO	0x00	WDT Peripheral ID Register[23:16]

Register 12: Watchdog Peripheral Identification 7 (WDTPeriphID7), offset 0xFDC

The **WDTPeriphIDn** registers are hard-coded and the fields within the register determine the reset value.

Watchdog Peripheral Identification 7 (WDTPeriphID7)

Base 0x4000.0000
Offset 0xFDC
Type RO, reset 0x0000.0000

	31	30	29	28	27	26	25	24	23	22	21	20	19	18	17	16
	reserved															
Type	RO	RO	RO	RO	RO	RO	RO	RO	RO	RO	RO	RO	RO	RO	RO	RO
Reset	0	0	0	0	0	0	0	0	0	0	0	0	0	0	0	0

	15	14	13	12	11	10	9	8	7	6	5	4	3	2	1	0
	reserved								PID7							
Type	RO	RO	RO	RO	RO	RO	RO	RO	RO	RO	RO	RO	RO	RO	RO	RO
Reset	0	0	0	0	0	0	0	0	0	0	0	0	0	0	0	0

Bit/Field	Name	Type	Reset	Description
31:8	reserved	RO	0x00	Software should not rely on the value of a reserved bit. To provide compatibility with future products, the value of a reserved bit should be preserved across a read-modify-write operation.
7:0	PID7	RO	0x00	WDT Peripheral ID Register[31:24]

Register 13: Watchdog Peripheral Identification 0 (WDTPeriphID0), offset 0xFE0

The **WDTPeriphIDn** registers are hard-coded and the fields within the register determine the reset value.

Watchdog Peripheral Identification 0 (WDTPeriphID0)

Base 0x4000.0000
Offset 0xFE0
Type RO, reset 0x0000.0005

	31	30	29	28	27	26	25	24	23	22	21	20	19	18	17	16
	reserved															
Type	RO	RO	RO	RO	RO	RO	RO	RO	RO	RO	RO	RO	RO	RO	RO	RO
Reset	0	0	0	0	0	0	0	0	0	0	0	0	0	0	0	0

	15	14	13	12	11	10	9	8	7	6	5	4	3	2	1	0
	reserved								PID0							
Type	RO	RO	RO	RO	RO	RO	RO	RO	RO	RO	RO	RO	RO	RO	RO	RO
Reset	0	0	0	0	0	0	0	0	0	0	0	0	0	1	0	1

Bit/Field	Name	Type	Reset	Description
31:8	reserved	RO	0x00	Software should not rely on the value of a reserved bit. To provide compatibility with future products, the value of a reserved bit should be preserved across a read-modify-write operation.
7:0	PID0	RO	0x05	Watchdog Peripheral ID Register[7:0]

Register 14: Watchdog Peripheral Identification 1 (WDTPeriphID1), offset 0xFE4

The **WDTPeriphIDn** registers are hard-coded and the fields within the register determine the reset value.

Watchdog Peripheral Identification 1 (WDTPeriphID1)

Base 0x4000.0000
Offset 0xFE4
Type RO, reset 0x0000.0018

	31	30	29	28	27	26	25	24	23	22	21	20	19	18	17	16
	reserved															
Type	RO	RO	RO	RO	RO	RO	RO	RO	RO	RO	RO	RO	RO	RO	RO	RO
Reset	0	0	0	0	0	0	0	0	0	0	0	0	0	0	0	0

	15	14	13	12	11	10	9	8	7	6	5	4	3	2	1	0
	reserved								PID1							
Type	RO	RO	RO	RO	RO	RO	RO	RO	RO	RO	RO	RO	RO	RO	RO	RO
Reset	0	0	0	0	0	0	0	0	0	0	0	1	1	0	0	0

Bit/Field	Name	Type	Reset	Description
31:8	reserved	RO	0x00	Software should not rely on the value of a reserved bit. To provide compatibility with future products, the value of a reserved bit should be preserved across a read-modify-write operation.
7:0	PID1	RO	0x18	Watchdog Peripheral ID Register[15:8]

Register 15: Watchdog Peripheral Identification 2 (WDTPeriphID2), offset 0xFE8

The **WDTPeriphIDn** registers are hard-coded and the fields within the register determine the reset value.

Watchdog Peripheral Identification 2 (WDTPeriphID2)

Base 0x4000.0000
Offset 0xFE8
Type RO, reset 0x0000.0018

	31	30	29	28	27	26	25	24	23	22	21	20	19	18	17	16
	reserved															
Type	RO	RO	RO	RO	RO	RO	RO	RO	RO	RO	RO	RO	RO	RO	RO	RO
Reset	0	0	0	0	0	0	0	0	0	0	0	0	0	0	0	0

	15	14	13	12	11	10	9	8	7	6	5	4	3	2	1	0
	reserved								PID2							
Type	RO	RO	RO	RO	RO	RO	RO	RO	RO	RO	RO	RO	RO	RO	RO	RO
Reset	0	0	0	0	0	0	0	0	0	0	0	1	1	0	0	0

Bit/Field	Name	Type	Reset	Description
31:8	reserved	RO	0x00	Software should not rely on the value of a reserved bit. To provide compatibility with future products, the value of a reserved bit should be preserved across a read-modify-write operation.
7:0	PID2	RO	0x18	Watchdog Peripheral ID Register[23:16]

Register 16: Watchdog Peripheral Identification 3 (WDTPeriphID3), offset 0xFEC

The **WDTPeriphIDn** registers are hard-coded and the fields within the register determine the reset value.

Watchdog Peripheral Identification 3 (WDTPeriphID3)

Base 0x4000.0000
Offset 0xFEC
Type RO, reset 0x0000.0001

	31	30	29	28	27	26	25	24	23	22	21	20	19	18	17	16
	reserved															
Type	RO	RO	RO	RO	RO	RO	RO	RO	RO	RO	RO	RO	RO	RO	RO	RO
Reset	0	0	0	0	0	0	0	0	0	0	0	0	0	0	0	0

	15	14	13	12	11	10	9	8	7	6	5	4	3	2	1	0
	reserved								PID3							
Type	RO	RO	RO	RO	RO	RO	RO	RO	RO	RO	RO	RO	RO	RO	RO	RO
Reset	0	0	0	0	0	0	0	0	0	0	0	0	0	0	0	1

Bit/Field	Name	Type	Reset	Description
31:8	reserved	RO	0x00	Software should not rely on the value of a reserved bit. To provide compatibility with future products, the value of a reserved bit should be preserved across a read-modify-write operation.
7:0	PID3	RO	0x01	Watchdog Peripheral ID Register[31:24]

Register 17: Watchdog PrimeCell Identification 0 (WDTPCellID0), offset 0xFF0

The **WDTPCellIDn** registers are hard-coded and the fields within the register determine the reset value.

Watchdog PrimeCell Identification 0 (WDTPCellID0)

Base 0x4000.0000
Offset 0xFF0
Type RO, reset 0x0000.000D

	31	30	29	28	27	26	25	24	23	22	21	20	19	18	17	16
	reserved															
Type	RO	RO	RO	RO	RO	RO	RO	RO	RO	RO	RO	RO	RO	RO	RO	RO
Reset	0	0	0	0	0	0	0	0	0	0	0	0	0	0	0	0

	15	14	13	12	11	10	9	8	7	6	5	4	3	2	1	0
	reserved								CID0							
Type	RO	RO	RO	RO	RO	RO	RO	RO	RO	RO	RO	RO	RO	RO	RO	RO
Reset	0	0	0	0	0	0	0	0	0	0	0	0	1	1	0	1

Bit/Field	Name	Type	Reset	Description
31:8	reserved	RO	0x00	Software should not rely on the value of a reserved bit. To provide compatibility with future products, the value of a reserved bit should be preserved across a read-modify-write operation.
7:0	CID0	RO	0x0D	Watchdog PrimeCell ID Register[7:0]

Register 18: Watchdog PrimeCell Identification 1 (WDTPCellID1), offset 0xFF4

The **WDTPCellIDn** registers are hard-coded and the fields within the register determine the reset value.

Watchdog PrimeCell Identification 1 (WDTPCellID1)

Base 0x4000.0000
Offset 0xFF4
Type RO, reset 0x0000.00F0

	31	30	29	28	27	26	25	24	23	22	21	20	19	18	17	16
	reserved															
Type	RO	RO	RO	RO	RO	RO	RO	RO	RO	RO	RO	RO	RO	RO	RO	RO
Reset	0	0	0	0	0	0	0	0	0	0	0	0	0	0	0	0

	15	14	13	12	11	10	9	8	7	6	5	4	3	2	1	0
	reserved								CID1							
Type	RO	RO	RO	RO	RO	RO	RO	RO	RO	RO	RO	RO	RO	RO	RO	RO
Reset	0	0	0	0	0	0	0	0	1	1	1	1	0	0	0	0

Bit/Field	Name	Type	Reset	Description
31:8	reserved	RO	0x00	Software should not rely on the value of a reserved bit. To provide compatibility with future products, the value of a reserved bit should be preserved across a read-modify-write operation.
7:0	CID1	RO	0xF0	Watchdog PrimeCell ID Register[15:8]

Register 19: Watchdog PrimeCell Identification 2 (WDTPCellID2), offset 0xFF8

The **WDTPCellIDn** registers are hard-coded and the fields within the register determine the reset value.

Watchdog PrimeCell Identification 2 (WDTPCellID2)

Base 0x4000.0000
Offset 0xFF8
Type RO, reset 0x0000.0005

	31	30	29	28	27	26	25	24	23	22	21	20	19	18	17	16
	reserved															
Type	RO	RO	RO	RO	RO	RO	RO	RO	RO	RO	RO	RO	RO	RO	RO	RO
Reset	0	0	0	0	0	0	0	0	0	0	0	0	0	0	0	0

	15	14	13	12	11	10	9	8	7	6	5	4	3	2	1	0
	reserved								CID2							
Type	RO	RO	RO	RO	RO	RO	RO	RO	RO	RO	RO	RO	RO	RO	RO	RO
Reset	0	0	0	0	0	0	0	0	0	0	0	0	0	1	0	1

Bit/Field	Name	Type	Reset	Description
31:8	reserved	RO	0x00	Software should not rely on the value of a reserved bit. To provide compatibility with future products, the value of a reserved bit should be preserved across a read-modify-write operation.
7:0	CID2	RO	0x05	Watchdog PrimeCell ID Register[23:16]

Register 20: Watchdog PrimeCell Identification 3 (WDTPCellID3), offset 0xFFC

The **WDTPCellIDn** registers are hard-coded and the fields within the register determine the reset value.

Watchdog PrimeCell Identification 3 (WDTPCellID3)

Base 0x4000.0000
Offset 0xFFC
Type RO, reset 0x0000.00B1

	31	30	29	28	27	26	25	24	23	22	21	20	19	18	17	16
	reserved															
Type	RO	RO	RO	RO	RO	RO	RO	RO	RO	RO	RO	RO	RO	RO	RO	RO
Reset	0	0	0	0	0	0	0	0	0	0	0	0	0	0	0	0

	15	14	13	12	11	10	9	8	7	6	5	4	3	2	1	0
	reserved								CID3							
Type	RO	RO	RO	RO	RO	RO	RO	RO	RO	RO	RO	RO	RO	RO	RO	RO
Reset	0	0	0	0	0	0	0	0	1	0	1	1	0	0	0	1

Bit/Field	Name	Type	Reset	Description
31:8	reserved	RO	0x00	Software should not rely on the value of a reserved bit. To provide compatibility with future products, the value of a reserved bit should be preserved across a read-modify-write operation.
7:0	CID3	RO	0xB1	Watchdog PrimeCell ID Register[31:24]

11 Universal Asynchronous Receivers/Transmitters (UARTs)

Each Stellaris® Universal Asynchronous Receiver/Transmitter (UART) has the following features:

- Three fully programmable 16C550-type UARTs with IrDA support
- Separate 16x8 transmit (TX) and receive (RX) FIFOs to reduce CPU interrupt service loading
- Programmable baud-rate generator allowing speeds up to 3.125 Mbps
- Programmable FIFO length, including 1-byte deep operation providing conventional double-buffered interface
- FIFO trigger levels of 1/8, 1/4, 1/2, 3/4, and 7/8
- Standard asynchronous communication bits for start, stop, and parity
- Line-break generation and detection
- Fully programmable serial interface characteristics
  - 5, 6, 7, or 8 data bits
  - Even, odd, stick, or no-parity bit generation/detection
  - 1 or 2 stop bit generation
- IrDA serial-IR (SIR) encoder/decoder providing
  - Programmable use of IrDA Serial Infrared (SIR) or UART input/output
  - Support of IrDA SIR encoder/decoder functions for data rates up to 115.2 Kbps half-duplex
  - Support of normal 3/16 and low-power (1.41-2.23 µs) bit durations
  - Programmable internal clock generator enabling division of reference clock by 1 to 256 for low-power mode bit duration

11.1 Block Diagram

Figure 11-1. UART Module Block Diagram

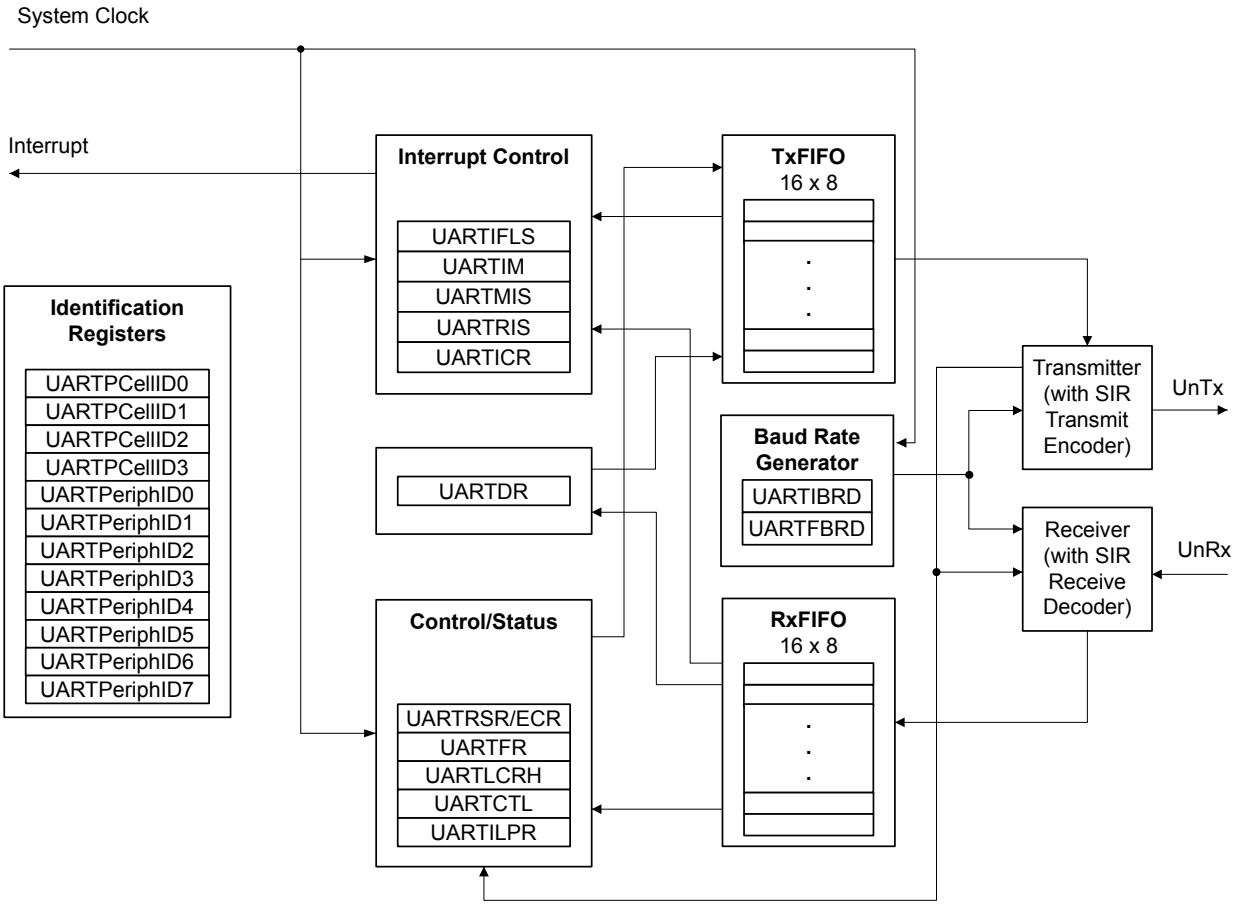

11.2 Signal Description

Table 11-1 on page 388 and Table 11-2 on page 389 list the external signals of the UART module and describe the function of each. The UART signals are alternate functions for some GPIO signals and default to be GPIO signals at reset, with the exception of the `U0Rx` and `U0Tx` pins which default to the UART function. The column in the table below titled "Pin Assignment" lists the possible GPIO pin placements for these UART signals. The `AFSEL` bit in the **GPIO Alternate Function Select (GPIOAFSEL)** register (page 301) should be set to choose the UART function. For more information on configuring GPIOs, see “General-Purpose Input/Outputs (GPIOs)” on page 278.

Table 11-1. UART Signals (100LQFP)

Pin Name	Pin Number	Pin Type	Buffer Type[a]	Description
`U0Rx`	26	I	TTL	UART module 0 receive. When in IrDA mode, this signal has IrDA modulation.
`U0Tx`	27	O	TTL	UART module 0 transmit. When in IrDA mode, this signal has IrDA modulation.
`U1Rx`	12	I	TTL	UART module 1 receive. When in IrDA mode, this signal has IrDA modulation.

Table 11-1. UART Signals (100LQFP) ***(continued)***

Pin Name	Pin Number	Pin Type	Buffer Type[a]	Description
U1Tx	13	O	TTL	UART module 1 transmit. When in IrDA mode, this signal has IrDA modulation.
U2Rx	19	I	TTL	UART module 2 receive. When in IrDA mode, this signal has IrDA modulation.
U2Tx	18	O	TTL	UART module 2 transmit. When in IrDA mode, this signal has IrDA modulation.

a. The TTL designation indicates the pin has TTL-compatible voltage levels.

Table 11-2. UART Signals (108BGA)

Pin Name	Pin Number	Pin Type	Buffer Type[a]	Description
U0Rx	L3	I	TTL	UART module 0 receive. When in IrDA mode, this signal has IrDA modulation.
U0Tx	M3	O	TTL	UART module 0 transmit. When in IrDA mode, this signal has IrDA modulation.
U1Rx	H2	I	TTL	UART module 1 receive. When in IrDA mode, this signal has IrDA modulation.
U1Tx	H1	O	TTL	UART module 1 transmit. When in IrDA mode, this signal has IrDA modulation.
U2Rx	K1	I	TTL	UART module 2 receive. When in IrDA mode, this signal has IrDA modulation.
U2Tx	K2	O	TTL	UART module 2 transmit. When in IrDA mode, this signal has IrDA modulation.

a. The TTL designation indicates the pin has TTL-compatible voltage levels.

11.3 Functional Description

Each Stellaris UART performs the functions of parallel-to-serial and serial-to-parallel conversions. It is similar in functionality to a 16C550 UART, but is not register compatible.

The UART is configured for transmit and/or receive via the TXE and RXE bits of the **UART Control (UARTCTL)** register (see page 408). Transmit and receive are both enabled out of reset. Before any control registers are programmed, the UART must be disabled by clearing the UARTEN bit in **UARTCTL**. If the UART is disabled during a TX or RX operation, the current transaction is completed prior to the UART stopping.

The UART peripheral also includes a serial IR (SIR) encoder/decoder block that can be connected to an infrared transceiver to implement an IrDA SIR physical layer. The SIR function is programmed using the UARTCTL register.

11.3.1 Transmit/Receive Logic

The transmit logic performs parallel-to-serial conversion on the data read from the transmit FIFO. The control logic outputs the serial bit stream beginning with a start bit, and followed by the data bits (LSB first), parity bit, and the stop bits according to the programmed configuration in the control registers. See Figure 11-2 on page 390 for details.

The receive logic performs serial-to-parallel conversion on the received bit stream after a valid start pulse has been detected. Overrun, parity, frame error checking, and line-break detection are also performed, and their status accompanies the data that is written to the receive FIFO.

Figure 11-2. UART Character Frame

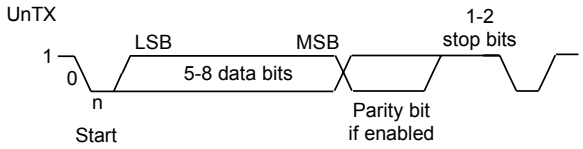

11.3.2 Baud-Rate Generation

The baud-rate divisor is a 22-bit number consisting of a 16-bit integer and a 6-bit fractional part. The number formed by these two values is used by the baud-rate generator to determine the bit period. Having a fractional baud-rate divider allows the UART to generate all the standard baud rates.

The 16-bit integer is loaded through the **UART Integer Baud-Rate Divisor (UARTIBRD)** register (see page 404) and the 6-bit fractional part is loaded with the **UART Fractional Baud-Rate Divisor (UARTFBRD)** register (see page 405). The baud-rate divisor (BRD) has the following relationship to the system clock (where *BRDI* is the integer part of the BRD and *BRDF* is the fractional part, separated by a decimal place.)

```
BRD = BRDI + BRDF = UARTSysClk / (16 * Baud Rate)
```

where UARTSysClk is the system clock connected to the UART.

The 6-bit fractional number (that is to be loaded into the DIVFRAC bit field in the **UARTFBRD** register) can be calculated by taking the fractional part of the baud-rate divisor, multiplying it by 64, and adding 0.5 to account for rounding errors:

```
UARTFBRD[DIVFRAC] = integer(BRDF * 64 + 0.5)
```

The UART generates an internal baud-rate reference clock at 16x the baud-rate (referred to as Baud16). This reference clock is divided by 16 to generate the transmit clock, and is used for error detection during receive operations.

Along with the **UART Line Control, High Byte (UARTLCRH)** register (see page 406), the **UARTIBRD** and **UARTFBRD** registers form an internal 30-bit register. This internal register is only updated when a write operation to **UARTLCRH** is performed, so any changes to the baud-rate divisor must be followed by a write to the **UARTLCRH** register for the changes to take effect.

To update the baud-rate registers, there are four possible sequences:

- **UARTIBRD** write, **UARTFBRD** write, and **UARTLCRH** write
- **UARTFBRD** write, **UARTIBRD** write, and **UARTLCRH** write
- **UARTIBRD** write and **UARTLCRH** write
- **UARTFBRD** write and **UARTLCRH** write

11.3.3 Data Transmission

Data received or transmitted is stored in two 16-byte FIFOs, though the receive FIFO has an extra four bits per character for status information. For transmission, data is written into the transmit FIFO. If the UART is enabled, it causes a data frame to start transmitting with the parameters indicated in the **UARTLCRH** register. Data continues to be transmitted until there is no data left in the transmit FIFO. The BUSY bit in the **UART Flag (UARTFR)** register (see page 401) is asserted as soon as

data is written to the transmit FIFO (that is, if the FIFO is non-empty) and remains asserted while data is being transmitted. The BUSY bit is negated only when the transmit FIFO is empty, and the last character has been transmitted from the shift register, including the stop bits. The UART can indicate that it is busy even though the UART may no longer be enabled.

When the receiver is idle (the UnRx is continuously 1) and the data input goes Low (a start bit has been received), the receive counter begins running and data is sampled on the eighth cycle of Baud16 (described in “Transmit/Receive Logic” on page 389).

The start bit is valid and recognized if UnRx is still low on the eighth cycle of Baud16, otherwise it is ignored. After a valid start bit is detected, successive data bits are sampled on every 16th cycle of Baud16 (that is, one bit period later) according to the programmed length of the data characters. The parity bit is then checked if parity mode was enabled. Data length and parity are defined in the **UARTLCRH** register.

Lastly, a valid stop bit is confirmed if UnRx is High, otherwise a framing error has occurred. When a full word is received, the data is stored in the receive FIFO, with any error bits associated with that word.

11.3.4 Serial IR (SIR)

The UART peripheral includes an IrDA serial-IR (SIR) encoder/decoder block. The IrDA SIR block provides functionality that converts between an asynchronous UART data stream, and half-duplex serial SIR interface. No analog processing is performed on-chip. The role of the SIR block is to provide a digital encoded output and decoded input to the UART. The UART signal pins can be connected to an infrared transceiver to implement an IrDA SIR physical layer link. The SIR block has two modes of operation:

- In normal IrDA mode, a zero logic level is transmitted as high pulse of 3/16th duration of the selected baud rate bit period on the output pin, while logic one levels are transmitted as a static LOW signal. These levels control the driver of an infrared transmitter, sending a pulse of light for each zero. On the reception side, the incoming light pulses energize the photo transistor base of the receiver, pulling its output LOW. This drives the UART input pin LOW.
- In low-power IrDA mode, the width of the transmitted infrared pulse is set to three times the period of the internally generated IrLPBaud16 signal (1.63 µs, assuming a nominal 1.8432 MHz frequency) by changing the appropriate bit in the **UARTCR** register. See page 403 for more information on IrDA low-power pulse-duration configuration.

Figure 11-3 on page 392 shows the UART transmit and receive signals, with and without IrDA modulation.

Figure 11-3. IrDA Data Modulation

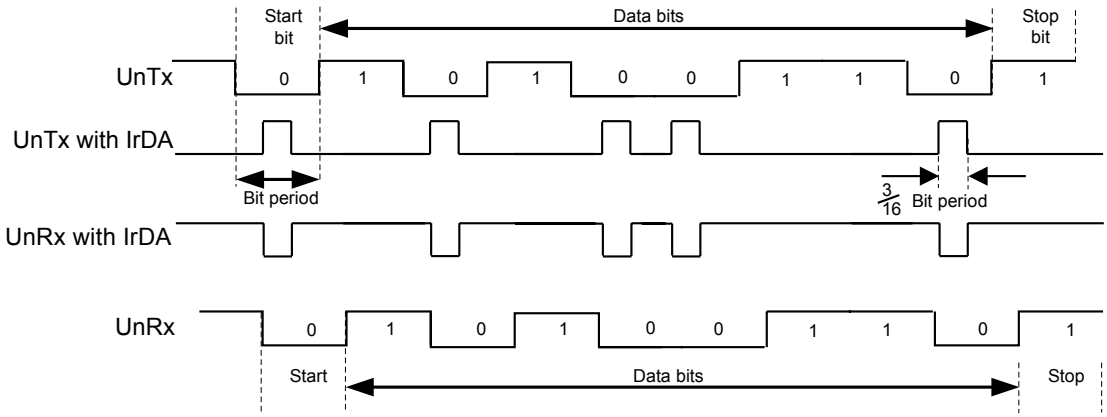

In both normal and low-power IrDA modes:

- During transmission, the UART data bit is used as the base for encoding
- During reception, the decoded bits are transferred to the UART receive logic

The IrDA SIR physical layer specifies a half-duplex communication link, with a minimum 10 ms delay between transmission and reception. This delay must be generated by software because it is not automatically supported by the UART. The delay is required because the infrared receiver electronics might become biased, or even saturated from the optical power coupled from the adjacent transmitter LED. This delay is known as latency, or receiver setup time.

If the application does not require the use of the UnRx signal, the GPIO pin that has the UnRx signal as an alternate function must be configured as the UnRx signal and pulled High.

11.3.5 FIFO Operation

The UART has two 16-entry FIFOs; one for transmit and one for receive. Both FIFOs are accessed via the **UART Data (UARTDR)** register (see page 397). Read operations of the **UARTDR** register return a 12-bit value consisting of 8 data bits and 4 error flags while write operations place 8-bit data in the transmit FIFO.

Out of reset, both FIFOs are disabled and act as 1-byte-deep holding registers. The FIFOs are enabled by setting the FEN bit in **UARTLCRH** (page 406).

FIFO status can be monitored via the **UART Flag (UARTFR)** register (see page 401) and the **UART Receive Status (UARTRSR)** register. Hardware monitors empty, full and overrun conditions. The **UARTFR** register contains empty and full flags (TXFE, TXFF, RXFE, and RXFF bits) and the **UARTRSR** register shows overrun status via the OE bit.

The trigger points at which the FIFOs generate interrupts is controlled via the **UART Interrupt FIFO Level Select (UARTIFLS)** register (see page 410). Both FIFOs can be individually configured to trigger interrupts at different levels. Available configurations include 1/8, ¼, ½, ¾, and 7/8. For example, if the ¼ option is selected for the receive FIFO, the UART generates a receive interrupt after 4 data bytes are received. Out of reset, both FIFOs are configured to trigger an interrupt at the ½ mark.

11.3.6 Interrupts

The UART can generate interrupts when the following conditions are observed:

- Overrun Error
- Break Error
- Parity Error
- Framing Error
- Receive Timeout
- Transmit (when condition defined in the `TXIFLSEL` bit in the **UARTIFLS** register is met)
- Receive (when condition defined in the `RXIFLSEL` bit in the **UARTIFLS** register is met)

All of the interrupt events are ORed together before being sent to the interrupt controller, so the UART can only generate a single interrupt request to the controller at any given time. Software can service multiple interrupt events in a single interrupt service routine by reading the **UART Masked Interrupt Status (UARTMIS)** register (see page 415).

The interrupt events that can trigger a controller-level interrupt are defined in the **UART Interrupt Mask (UARTIM**) register (see page 412) by setting the corresponding `IM` bit to 1. If interrupts are not used, the raw interrupt status is always visible via the **UART Raw Interrupt Status (UARTRIS)** register (see page 414).

Interrupts are always cleared (for both the **UARTMIS** and **UARTRIS** registers) by setting the corresponding bit in the **UART Interrupt Clear (UARTICR)** register (see page 416).

The receive interrupt changes state when one of the following events occurs:

- If the FIFOs are enabled and the receive FIFO reaches the programmed trigger level, the `RXRIS` bit is set. The receive interrupt is cleared by reading data from the receive FIFO until it becomes less than the trigger level, or by clearing the interrupt by writing a 1 to the `RXIC` bit.
- If the FIFOs are disabled (have a depth of one location) and data is received thereby filling the location, the `RXRIS` bit is set. The receive interrupt is cleared by performing a single read of the receive FIFO, or by clearing the interrupt by writing a 1 to the `RXIC` bit.

The transmit interrupt changes state when one of the following events occurs:

- If the FIFOs are enabled and the transmit FIFO reaches the programmed trigger level, the `TXRIS` bit is set. The transmit interrupt is cleared by writing data to the transmit FIFO until it becomes greater than the trigger level, or by clearing the interrupt by writing a 1 to the `TXIC` bit.
- If the FIFOs are disabled (have a depth of one location) and there is no data present in the transmitters single location, the `TXRIS` bit is set. It is cleared by performing a single write to the transmit FIFO, or by clearing the interrupt by writing a 1 to the `TXIC` bit.

11.3.7 Loopback Operation

The UART can be placed into an internal loopback mode for diagnostic or debug work. This is accomplished by setting the `LBE` bit in the **UARTCTL** register (see page 408). In loopback mode, data transmitted on UnTx is received on the UnRx input.

11.3.8 IrDA SIR block

The IrDA SIR block contains an IrDA serial IR (SIR) protocol encoder/decoder. When enabled, the SIR block uses the `UnTx` and `UnRx` pins for the SIR protocol, which should be connected to an IR transceiver.

The SIR block can receive and transmit, but it is only half-duplex so it cannot do both at the same time. Transmission must be stopped before data can be received. The IrDA SIR physical layer specifies a minimum 10-ms delay between transmission and reception.

11.4 Initialization and Configuration

To use the UARTs, the peripheral clock must be enabled by setting the `UART0`, `UART1`, or `UART2` bits in the **RCGC1** register.

This section discusses the steps that are required to use a UART module. For this example, the UART clock is assumed to be 20 MHz and the desired UART configuration is:

- 115200 baud rate
- Data length of 8 bits
- One stop bit
- No parity
- FIFOs disabled
- No interrupts

The first thing to consider when programming the UART is the baud-rate divisor (BRD), since the **UARTIBRD** and **UARTFBRD** registers must be written before the **UARTLCRH** register. Using the equation described in “Baud-Rate Generation” on page 390, the BRD can be calculated:

```
BRD = 20,000,000 / (16 * 115,200) = 10.8507
```

which means that the `DIVINT` field of the **UARTIBRD** register (see page 404) should be set to 10. The value to be loaded into the **UARTFBRD** register (see page 405) is calculated by the equation:

```
UARTFBRD[DIVFRAC] = integer(0.8507 * 64 + 0.5) = 54
```

With the BRD values in hand, the UART configuration is written to the module in the following order:

1. Disable the UART by clearing the `UARTEN` bit in the **UARTCTL** register.
2. Write the integer portion of the BRD to the **UARTIBRD** register.
3. Write the fractional portion of the BRD to the **UARTFBRD** register.
4. Write the desired serial parameters to the **UARTLCRH** register (in this case, a value of 0x0000.0060).
5. Enable the UART by setting the `UARTEN` bit in the **UARTCTL** register.

11.5 Register Map

Table 11-3 on page 395 lists the UART registers. The offset listed is a hexadecimal increment to the register's address, relative to that UART's base address:

- UART0: 0x4000.C000
- UART1: 0x4000.D000
- UART2: 0x4000.E000

Note that the UART module clock must be enabled before the registers can be programmed (see page 212). There must be a delay of 3 system clocks after the UART module clock is enabled before any UART module registers are accessed.

Note: The UART must be disabled (see the UARTEN bit in the **UARTCTL** register on page 408) before any of the control registers are reprogrammed. When the UART is disabled during a TX or RX operation, the current transaction is completed prior to the UART stopping.

Table 11-3. UART Register Map

Offset	Name	Type	Reset	Description	See page
0x000	UARTDR	R/W	0x0000.0000	UART Data	397
0x004	UARTRSR/UARTECR	R/W	0x0000.0000	UART Receive Status/Error Clear	399
0x018	UARTFR	RO	0x0000.0090	UART Flag	401
0x020	UARTILPR	R/W	0x0000.0000	UART IrDA Low-Power Register	403
0x024	UARTIBRD	R/W	0x0000.0000	UART Integer Baud-Rate Divisor	404
0x028	UARTFBRD	R/W	0x0000.0000	UART Fractional Baud-Rate Divisor	405
0x02C	UARTLCRH	R/W	0x0000.0000	UART Line Control	406
0x030	UARTCTL	R/W	0x0000.0300	UART Control	408
0x034	UARTIFLS	R/W	0x0000.0012	UART Interrupt FIFO Level Select	410
0x038	UARTIM	R/W	0x0000.0000	UART Interrupt Mask	412
0x03C	UARTRIS	RO	0x0000.000F	UART Raw Interrupt Status	414
0x040	UARTMIS	RO	0x0000.0000	UART Masked Interrupt Status	415
0x044	UARTICR	W1C	0x0000.0000	UART Interrupt Clear	416
0xFD0	UARTPeriphID4	RO	0x0000.0000	UART Peripheral Identification 4	418
0xFD4	UARTPeriphID5	RO	0x0000.0000	UART Peripheral Identification 5	419
0xFD8	UARTPeriphID6	RO	0x0000.0000	UART Peripheral Identification 6	420
0xFDC	UARTPeriphID7	RO	0x0000.0000	UART Peripheral Identification 7	421
0xFE0	UARTPeriphID0	RO	0x0000.0011	UART Peripheral Identification 0	422
0xFE4	UARTPeriphID1	RO	0x0000.0000	UART Peripheral Identification 1	423
0xFE8	UARTPeriphID2	RO	0x0000.0018	UART Peripheral Identification 2	424
0xFEC	UARTPeriphID3	RO	0x0000.0001	UART Peripheral Identification 3	425

Table 11-3. UART Register Map *(continued)*

Offset	Name	Type	Reset	Description	See page
0xFF0	UARTPCellID0	RO	0x0000.000D	UART PrimeCell Identification 0	426
0xFF4	UARTPCellID1	RO	0x0000.00F0	UART PrimeCell Identification 1	427
0xFF8	UARTPCellID2	RO	0x0000.0005	UART PrimeCell Identification 2	428
0xFFC	UARTPCellID3	RO	0x0000.00B1	UART PrimeCell Identification 3	429

11.6 Register Descriptions

The remainder of this section lists and describes the UART registers, in numerical order by address offset.

Register 1: UART Data (UARTDR), offset 0x000

Important: This register is read-sensitive. See the register description for details.

This register is the data register (the interface to the FIFOs).

When FIFOs are enabled, data written to this location is pushed onto the transmit FIFO. If FIFOs are disabled, data is stored in the transmitter holding register (the bottom word of the transmit FIFO). A write to this register initiates a transmission from the UART.

For received data, if the FIFO is enabled, the data byte and the 4-bit status (break, frame, parity, and overrun) is pushed onto the 12-bit wide receive FIFO. If FIFOs are disabled, the data byte and status are stored in the receiving holding register (the bottom word of the receive FIFO). The received data can be retrieved by reading this register.

UART Data (UARTDR)

UART0 base: 0x4000.C000
UART1 base: 0x4000.D000
UART2 base: 0x4000.E000
Offset 0x000
Type R/W, reset 0x0000.0000

	31	30	29	28	27	26	25	24	23	22	21	20	19	18	17	16
	reserved															
Type	RO	RO	RO	RO	RO	RO	RO	RO	RO	RO	RO	RO	RO	RO	RO	RO
Reset	0	0	0	0	0	0	0	0	0	0	0	0	0	0	0	0

	15	14	13	12	11	10	9	8	7	6	5	4	3	2	1	0
	reserved				OE	BE	PE	FE	DATA							
Type	RO	RO	RO	RO	RO	RO	RO	RO	R/W	R/W	R/W	R/W	R/W	R/W	R/W	R/W
Reset	0	0	0	0	0	0	0	0	0	0	0	0	0	0	0	0

Bit/Field	Name	Type	Reset	Description
31:12	reserved	RO	0	Software should not rely on the value of a reserved bit. To provide compatibility with future products, the value of a reserved bit should be preserved across a read-modify-write operation.
11	OE	RO	0	UART Overrun Error The OE values are defined as follows: Value Description 0 There has been no data loss due to a FIFO overrun. 1 New data was received when the FIFO was full, resulting in data loss.
10	BE	RO	0	UART Break Error This bit is set to 1 when a break condition is detected, indicating that the receive data input was held Low for longer than a full-word transmission time (defined as start, data, parity, and stop bits). In FIFO mode, this error is associated with the character at the top of the FIFO. When a break occurs, only one 0 character is loaded into the FIFO. The next character is only enabled after the received data input goes to a 1 (marking state) and the next valid start bit is received.

Bit/Field	Name	Type	Reset	Description
9	PE	RO	0	UART Parity Error This bit is set to 1 when the parity of the received data character does not match the parity defined by bits 2 and 7 of the **UARTLCRH** register. In FIFO mode, this error is associated with the character at the top of the FIFO.
8	FE	RO	0	UART Framing Error This bit is set to 1 when the received character does not have a valid stop bit (a valid stop bit is 1).
7:0	DATA	R/W	0	Data Transmitted or Received When written, the data that is to be transmitted via the UART. When read, the data that was received by the UART.

Register 2: UART Receive Status/Error Clear (UARTRSR/UARTECR), offset 0x004

The **UARTRSR/UARTECR** register is the receive status register/error clear register.

In addition to the **UARTDR** register, receive status can also be read from the **UARTRSR** register. If the status is read from this register, then the status information corresponds to the entry read from **UARTDR** prior to reading **UARTRSR**. The status information for overrun is set immediately when an overrun condition occurs.

The **UARTRSR** register cannot be written.

A write of any value to the **UARTECR** register clears the framing, parity, break, and overrun errors. All the bits are cleared to 0 on reset.

Reads

UART Receive Status/Error Clear (UARTRSR/UARTECR)

UART0 base: 0x4000.C000
UART1 base: 0x4000.D000
UART2 base: 0x4000.E000
Offset 0x004
Type RO, reset 0x0000.0000

	31	30	29	28	27	26	25	24	23	22	21	20	19	18	17	16
	reserved															
Type	RO	RO	RO	RO	RO	RO	RO	RO	RO	RO	RO	RO	RO	RO	RO	RO
Reset	0	0	0	0	0	0	0	0	0	0	0	0	0	0	0	0

	15	14	13	12	11	10	9	8	7	6	5	4	3	2	1	0
	reserved												OE	BE	PE	FE
Type	RO	RO	RO	RO	RO	RO	RO	RO	RO	RO	RO	RO	RO	RO	RO	RO
Reset	0	0	0	0	0	0	0	0	0	0	0	0	0	0	0	0

Bit/Field	Name	Type	Reset	Description
31:4	reserved	RO	0	Software should not rely on the value of a reserved bit. To provide compatibility with future products, the value of a reserved bit should be preserved across a read-modify-write operation.
3	OE	RO	0	UART Overrun Error When this bit is set to 1, data is received and the FIFO is already full. This bit is cleared to 0 by a write to **UARTECR**. The FIFO contents remain valid since no further data is written when the FIFO is full, only the contents of the shift register are overwritten. The CPU must now read the data in order to empty the FIFO.
2	BE	RO	0	UART Break Error This bit is set to 1 when a break condition is detected, indicating that the received data input was held Low for longer than a full-word transmission time (defined as start, data, parity, and stop bits). This bit is cleared to 0 by a write to **UARTECR**. In FIFO mode, this error is associated with the character at the top of the FIFO. When a break occurs, only one 0 character is loaded into the FIFO. The next character is only enabled after the receive data input goes to a 1 (marking state) and the next valid start bit is received.

Bit/Field	Name	Type	Reset	Description
1	PE	RO	0	UART Parity Error This bit is set to 1 when the parity of the received data character does not match the parity defined by bits 2 and 7 of the **UARTLCRH** register. This bit is cleared to 0 by a write to **UARTECR**.
0	FE	RO	0	UART Framing Error This bit is set to 1 when the received character does not have a valid stop bit (a valid stop bit is 1). This bit is cleared to 0 by a write to **UARTECR**. In FIFO mode, this error is associated with the character at the top of the FIFO.

Writes

UART Receive Status/Error Clear (UARTRSR/UARTECR)

UART0 base: 0x4000.C000
UART1 base: 0x4000.D000
UART2 base: 0x4000.E000
Offset 0x004
Type WO, reset 0x0000.0000

	31	30	29	28	27	26	25	24	23	22	21	20	19	18	17	16
	reserved															
Type	WO	WO	WO	WO	WO	WO	WO	WO	WO	WO	WO	WO	WO	WO	WO	WO
Reset	0	0	0	0	0	0	0	0	0	0	0	0	0	0	0	0

	15	14	13	12	11	10	9	8	7	6	5	4	3	2	1	0
	reserved								DATA							
Type	WO	WO	WO	WO	WO	WO	WO	WO	WO	WO	WO	WO	WO	WO	WO	WO
Reset	0	0	0	0	0	0	0	0	0	0	0	0	0	0	0	0

Bit/Field	Name	Type	Reset	Description
31:8	reserved	WO	0	Software should not rely on the value of a reserved bit. To provide compatibility with future products, the value of a reserved bit should be preserved across a read-modify-write operation.
7:0	DATA	WO	0	Error Clear A write to this register of any data clears the framing, parity, break, and overrun flags.

Register 3: UART Flag (UARTFR), offset 0x018

The **UARTFR** register is the flag register. After reset, the TXFF, RXFF, and BUSY bits are 0, and TXFE and RXFE bits are 1.

UART Flag (UARTFR)

UART0 base: 0x4000.C000
UART1 base: 0x4000.D000
UART2 base: 0x4000.E000
Offset 0x018
Type RO, reset 0x0000.0090

	31	30	29	28	27	26	25	24	23	22	21	20	19	18	17	16
	reserved															
Type	RO	RO	RO	RO	RO	RO	RO	RO	RO	RO	RO	RO	RO	RO	RO	RO
Reset	0	0	0	0	0	0	0	0	0	0	0	0	0	0	0	0

	15	14	13	12	11	10	9	8	7	6	5	4	3	2	1	0
	reserved								TXFE	RXFF	TXFF	RXFE	BUSY	reserved		
Type	RO	RO	RO	RO	RO	RO	RO	RO	RO	RO	RO	RO	RO	RO	RO	RO
Reset	0	0	0	0	0	0	0	0	1	0	0	1	0	0	0	0

Bit/Field	Name	Type	Reset	Description
31:8	reserved	RO	0	Software should not rely on the value of a reserved bit. To provide compatibility with future products, the value of a reserved bit should be preserved across a read-modify-write operation.
7	TXFE	RO	1	UART Transmit FIFO Empty The meaning of this bit depends on the state of the FEN bit in the **UARTLCRH** register. If the FIFO is disabled (FEN is 0), this bit is set when the transmit holding register is empty. If the FIFO is enabled (FEN is 1), this bit is set when the transmit FIFO is empty.
6	RXFF	RO	0	UART Receive FIFO Full The meaning of this bit depends on the state of the FEN bit in the **UARTLCRH** register. If the FIFO is disabled, this bit is set when the receive holding register is full. If the FIFO is enabled, this bit is set when the receive FIFO is full.
5	TXFF	RO	0	UART Transmit FIFO Full The meaning of this bit depends on the state of the FEN bit in the **UARTLCRH** register. If the FIFO is disabled, this bit is set when the transmit holding register is full. If the FIFO is enabled, this bit is set when the transmit FIFO is full.
4	RXFE	RO	1	UART Receive FIFO Empty The meaning of this bit depends on the state of the FEN bit in the **UARTLCRH** register. If the FIFO is disabled, this bit is set when the receive holding register is empty. If the FIFO is enabled, this bit is set when the receive FIFO is empty.

Bit/Field	Name	Type	Reset	Description
3	BUSY	RO	0	UART Busy When this bit is 1, the UART is busy transmitting data. This bit remains set until the complete byte, including all stop bits, has been sent from the shift register. This bit is set as soon as the transmit FIFO becomes non-empty (regardless of whether UART is enabled).
2:0	reserved	RO	0	Software should not rely on the value of a reserved bit. To provide compatibility with future products, the value of a reserved bit should be preserved across a read-modify-write operation.

Register 4: UART IrDA Low-Power Register (UARTILPR), offset 0x020

The **UARTILPR** register is an 8-bit read/write register that stores the low-power counter divisor value used to derive the low-power SIR pulse width clock by dividing down the system clock (SysClk). All the bits are cleared to 0 when reset.

The internal `IrLPBaud16` clock is generated by dividing down SysClk according to the low-power divisor value written to **UARTILPR**. The duration of SIR pulses generated when low-power mode is enabled is three times the period of the `IrLPBaud16` clock. The low-power divisor value is calculated as follows:

$$\texttt{ILPDVSR} = \texttt{SysClk} / F_{\texttt{IrLPBaud16}}$$

where $F_{\texttt{IrLPBaud16}}$ is nominally 1.8432 MHz.

You must choose the divisor so that 1.42 MHz < $F_{\texttt{IrLPBaud16}}$ < 2.12 MHz, which results in a low-power pulse duration of 1.41–2.11 µs (three times the period of `IrLPBaud16`). The minimum frequency of `IrLPBaud16` ensures that pulses less than one period of `IrLPBaud16` are rejected, but that pulses greater than 1.4 µs are accepted as valid pulses.

Note: Zero is an illegal value. Programming a zero value results in no `IrLPBaud16` pulses being generated.

UART IrDA Low-Power Register (UARTILPR)

UART0 base: 0x4000.C000
UART1 base: 0x4000.D000
UART2 base: 0x4000.E000
Offset 0x020
Type R/W, reset 0x0000.0000

	31	30	29	28	27	26	25	24	23	22	21	20	19	18	17	16
	reserved															
Type	RO	RO	RO	RO	RO	RO	RO	RO	RO	RO	RO	RO	RO	RO	RO	RO
Reset	0	0	0	0	0	0	0	0	0	0	0	0	0	0	0	0

	15	14	13	12	11	10	9	8	7	6	5	4	3	2	1	0
	reserved								ILPDVSR							
Type	RO	RO	RO	RO	RO	RO	RO	RO	R/W	R/W	R/W	R/W	R/W	R/W	R/W	R/W
Reset	0	0	0	0	0	0	0	0	0	0	0	0	0	0	0	0

Bit/Field	Name	Type	Reset	Description
31:8	reserved	RO	0	Software should not rely on the value of a reserved bit. To provide compatibility with future products, the value of a reserved bit should be preserved across a read-modify-write operation.
7:0	ILPDVSR	R/W	0x00	IrDA Low-Power Divisor This is an 8-bit low-power divisor value.

Register 5: UART Integer Baud-Rate Divisor (UARTIBRD), offset 0x024

The **UARTIBRD** register is the integer part of the baud-rate divisor value. All the bits are cleared on reset. The minimum possible divide ratio is 1 (when **UARTIBRD**=0), in which case the **UARTFBRD** register is ignored. When changing the **UARTIBRD** register, the new value does not take effect until transmission/reception of the current character is complete. Any changes to the baud-rate divisor must be followed by a write to the **UARTLCRH** register. See “Baud-Rate Generation” on page 390 for configuration details.

UART Integer Baud-Rate Divisor (UARTIBRD)

UART0 base: 0x4000.C000
UART1 base: 0x4000.D000
UART2 base: 0x4000.E000
Offset 0x024
Type R/W, reset 0x0000.0000

	31	30	29	28	27	26	25	24	23	22	21	20	19	18	17	16
	reserved															
Type	RO	RO	RO	RO	RO	RO	RO	RO	RO	RO	RO	RO	RO	RO	RO	RO
Reset	0	0	0	0	0	0	0	0	0	0	0	0	0	0	0	0

	15	14	13	12	11	10	9	8	7	6	5	4	3	2	1	0
	DIVINT															
Type	R/W	R/W	R/W	R/W	R/W	R/W	R/W	R/W	R/W	R/W	R/W	R/W	R/W	R/W	R/W	R/W
Reset	0	0	0	0	0	0	0	0	0	0	0	0	0	0	0	0

Bit/Field	Name	Type	Reset	Description
31:16	reserved	RO	0	Software should not rely on the value of a reserved bit. To provide compatibility with future products, the value of a reserved bit should be preserved across a read-modify-write operation.
15:0	DIVINT	R/W	0x0000	Integer Baud-Rate Divisor

Register 6: UART Fractional Baud-Rate Divisor (UARTFBRD), offset 0x028

The **UARTFBRD** register is the fractional part of the baud-rate divisor value. All the bits are cleared on reset. When changing the **UARTFBRD** register, the new value does not take effect until transmission/reception of the current character is complete. Any changes to the baud-rate divisor must be followed by a write to the **UARTLCRH** register. See “Baud-Rate Generation” on page 390 for configuration details.

UART Fractional Baud-Rate Divisor (UARTFBRD)

UART0 base: 0x4000.C000
UART1 base: 0x4000.D000
UART2 base: 0x4000.E000
Offset 0x028
Type R/W, reset 0x0000.0000

	31	30	29	28	27	26	25	24	23	22	21	20	19	18	17	16
	reserved															
Type	RO	RO	RO	RO	RO	RO	RO	RO	RO	RO	RO	RO	RO	RO	RO	RO
Reset	0	0	0	0	0	0	0	0	0	0	0	0	0	0	0	0

	15	14	13	12	11	10	9	8	7	6	5	4	3	2	1	0
	reserved										DIVFRAC					
Type	RO	RO	RO	RO	RO	RO	RO	RO	RO	RO	R/W	R/W	R/W	R/W	R/W	R/W
Reset	0	0	0	0	0	0	0	0	0	0	0	0	0	0	0	0

Bit/Field	Name	Type	Reset	Description
31:6	reserved	RO	0x00	Software should not rely on the value of a reserved bit. To provide compatibility with future products, the value of a reserved bit should be preserved across a read-modify-write operation.
5:0	DIVFRAC	R/W	0x000	Fractional Baud-Rate Divisor

Register 7: UART Line Control (UARTLCRH), offset 0x02C

The **UARTLCRH** register is the line control register. Serial parameters such as data length, parity, and stop bit selection are implemented in this register.

When updating the baud-rate divisor (**UARTIBRD** and/or **UARTIFRD**), the **UARTLCRH** register must also be written. The write strobe for the baud-rate divisor registers is tied to the **UARTLCRH** register.

UART Line Control (UARTLCRH)

UART0 base: 0x4000.C000
UART1 base: 0x4000.D000
UART2 base: 0x4000.E000
Offset 0x02C
Type R/W, reset 0x0000.0000

	31	30	29	28	27	26	25	24	23	22	21	20	19	18	17	16
	reserved															
Type	RO	RO	RO	RO	RO	RO	RO	RO	RO	RO	RO	RO	RO	RO	RO	RO
Reset	0	0	0	0	0	0	0	0	0	0	0	0	0	0	0	0

	15	14	13	12	11	10	9	8	7	6	5	4	3	2	1	0
	reserved								SPS	WLEN		FEN	STP2	EPS	PEN	BRK
Type	RO	RO	RO	RO	RO	RO	RO	RO	R/W	R/W	R/W	R/W	R/W	R/W	R/W	R/W
Reset	0	0	0	0	0	0	0	0	0	0	0	0	0	0	0	0

Bit/Field	Name	Type	Reset	Description
31:8	reserved	RO	0	Software should not rely on the value of a reserved bit. To provide compatibility with future products, the value of a reserved bit should be preserved across a read-modify-write operation.
7	SPS	R/W	0	UART Stick Parity Select When bits 1, 2, and 7 of **UARTLCRH** are set, the parity bit is transmitted and checked as a 0. When bits 1 and 7 are set and 2 is cleared, the parity bit is transmitted and checked as a 1. When this bit is cleared, stick parity is disabled.
6:5	WLEN	R/W	0	UART Word Length The bits indicate the number of data bits transmitted or received in a frame as follows: Value Description 0x3 8 bits 0x2 7 bits 0x1 6 bits 0x0 5 bits (default)
4	FEN	R/W	0	UART Enable FIFOs If this bit is set to 1, transmit and receive FIFO buffers are enabled (FIFO mode). When cleared to 0, FIFOs are disabled (Character mode). The FIFOs become 1-byte-deep holding registers.
3	STP2	R/W	0	UART Two Stop Bits Select If this bit is set to 1, two stop bits are transmitted at the end of a frame. The receive logic does not check for two stop bits being received.

Bit/Field	Name	Type	Reset	Description
2	EPS	R/W	0	UART Even Parity Select If this bit is set to 1, even parity generation and checking is performed during transmission and reception, which checks for an even number of 1s in data and parity bits. When cleared to 0, then odd parity is performed, which checks for an odd number of 1s. This bit has no effect when parity is disabled by the PEN bit.
1	PEN	R/W	0	UART Parity Enable If this bit is set to 1, parity checking and generation is enabled; otherwise, parity is disabled and no parity bit is added to the data frame.
0	BRK	R/W	0	UART Send Break If this bit is set to 1, a Low level is continually output on the UnTX output, after completing transmission of the current character. For the proper execution of the break command, the software must set this bit for at least two frames (character periods). For normal use, this bit must be cleared to 0.

Register 8: UART Control (UARTCTL), offset 0x030

The **UARTCTL** register is the control register. All the bits are cleared on reset except for the `Transmit Enable (TXE)` and `Receive Enable (RXE)` bits, which are set to 1.

To enable the UART module, the `UARTEN` bit must be set to 1. If software requires a configuration change in the module, the `UARTEN` bit must be cleared before the configuration changes are written. If the UART is disabled during a transmit or receive operation, the current transaction is completed prior to the UART stopping.

Note: The **UARTCTL** register should not be changed while the UART is enabled or else the results are unpredictable. The following sequence is recommended for making changes to the **UARTCTL** register.

1. Disable the UART.
2. Wait for the end of transmission or reception of the current character.
3. Flush the transmit FIFO by disabling bit 4 (`FEN`) in the line control register (**UARTLCRH**).
4. Reprogram the control register.
5. Enable the UART.

UART Control (UARTCTL)

UART0 base: 0x4000.C000
UART1 base: 0x4000.D000
UART2 base: 0x4000.E000
Offset 0x030
Type R/W, reset 0x0000.0300

	31	30	29	28	27	26	25	24	23	22	21	20	19	18	17	16
	reserved															
Type	RO	RO	RO	RO	RO	RO	RO	RO	RO	RO	RO	RO	RO	RO	RO	RO
Reset	0	0	0	0	0	0	0	0	0	0	0	0	0	0	0	0

	15	14	13	12	11	10	9	8	7	6	5	4	3	2	1	0
	reserved						RXE	TXE	LBE	reserved				SIRLP	SIREN	UARTEN
Type	RO	RO	RO	RO	RO	RO	R/W	R/W	R/W	RO	RO	RO	RO	R/W	R/W	R/W
Reset	0	0	0	0	0	0	1	1	0	0	0	0	0	0	0	0

Bit/Field	Name	Type	Reset	Description
31:10	reserved	RO	0	Software should not rely on the value of a reserved bit. To provide compatibility with future products, the value of a reserved bit should be preserved across a read-modify-write operation.
9	RXE	R/W	1	UART Receive Enable If this bit is set to 1, the receive section of the UART is enabled. When the UART is disabled in the middle of a receive, it completes the current character before stopping. **Note:** To enable reception, the `UARTEN` bit must also be set.

Bit/Field	Name	Type	Reset	Description
8	TXE	R/W	1	UART Transmit Enable If this bit is set to 1, the transmit section of the UART is enabled. When the UART is disabled in the middle of a transmission, it completes the current character before stopping. **Note:** To enable transmission, the `UARTEN` bit must also be set.
7	LBE	R/W	0	UART Loop Back Enable If this bit is set to 1, the `UnTX` path is fed through the `UnRX` path.
6:3	reserved	RO	0	Software should not rely on the value of a reserved bit. To provide compatibility with future products, the value of a reserved bit should be preserved across a read-modify-write operation.
2	SIRLP	R/W	0	UART SIR Low Power Mode This bit selects the IrDA encoding mode. If this bit is cleared to 0, low-level bits are transmitted as an active High pulse with a width of 3/16th of the bit period. If this bit is set to 1, low-level bits are transmitted with a pulse width which is 3 times the period of the `IrLPBaud16` input signal, regardless of the selected bit rate. Setting this bit uses less power, but might reduce transmission distances. See page 403 for more information.
1	SIREN	R/W	0	UART SIR Enable If this bit is set to 1, the IrDA SIR block is enabled, and the UART will transmit and receive data using SIR protocol.
0	UARTEN	R/W	0	UART Enable If this bit is set to 1, the UART is enabled. When the UART is disabled in the middle of transmission or reception, it completes the current character before stopping.

Register 9: UART Interrupt FIFO Level Select (UARTIFLS), offset 0x034

The **UARTIFLS** register is the interrupt FIFO level select register. You can use this register to define the FIFO level at which the `TXRIS` and `RXRIS` bits in the **UARTRIS** register are triggered.

The interrupts are generated based on a transition through a level rather than being based on the level. That is, the interrupts are generated when the fill level progresses through the trigger level. For example, if the receive trigger level is set to the half-way mark, the interrupt is triggered as the module is receiving the 9th character.

Out of reset, the `TXIFLSEL` and `RXIFLSEL` bits are configured so that the FIFOs trigger an interrupt at the half-way mark.

UART Interrupt FIFO Level Select (UARTIFLS)

UART0 base: 0x4000.C000
UART1 base: 0x4000.D000
UART2 base: 0x4000.E000
Offset 0x034
Type R/W, reset 0x0000.0012

	31	30	29	28	27	26	25	24	23	22	21	20	19	18	17	16
	reserved															
Type	RO	RO	RO	RO	RO	RO	RO	RO	RO	RO	RO	RO	RO	RO	RO	RO
Reset	0	0	0	0	0	0	0	0	0	0	0	0	0	0	0	0

	15	14	13	12	11	10	9	8	7	6	5	4	3	2	1	0
	reserved										RXIFLSEL			TXIFLSEL		
Type	RO	RO	RO	RO	RO	RO	RO	RO	RO	RO	R/W	R/W	R/W	R/W	R/W	R/W
Reset	0	0	0	0	0	0	0	0	0	0	0	1	0	0	1	0

Bit/Field	Name	Type	Reset	Description
31:6	reserved	RO	0x00	Software should not rely on the value of a reserved bit. To provide compatibility with future products, the value of a reserved bit should be preserved across a read-modify-write operation.
5:3	RXIFLSEL	R/W	0x2	UART Receive Interrupt FIFO Level Select The trigger points for the receive interrupt are as follows: Value — Description 0x0 — RX FIFO ≥ ⅛ full 0x1 — RX FIFO ≥ ¼ full 0x2 — RX FIFO ≥ ½ full (default) 0x3 — RX FIFO ≥ ¾ full 0x4 — RX FIFO ≥ ⅞ full 0x5-0x7 — Reserved

Bit/Field	Name	Type	Reset	Description
2:0	TXIFLSEL	R/W	0x2	UART Transmit Interrupt FIFO Level Select The trigger points for the transmit interrupt are as follows: Value — Description 0x0 — TX FIFO ≤ ⅞ empty 0x1 — TX FIFO ≤ ¾ empty 0x2 — TX FIFO ≤ ½ empty (default) 0x3 — TX FIFO ≤ ¼ empty 0x4 — TX FIFO ≤ ⅛ empty 0x5-0x7 — Reserved

Register 10: UART Interrupt Mask (UARTIM), offset 0x038

The **UARTIM** register is the interrupt mask set/clear register.

On a read, this register gives the current value of the mask on the relevant interrupt. Writing a 1 to a bit allows the corresponding raw interrupt signal to be routed to the interrupt controller. Writing a 0 prevents the raw interrupt signal from being sent to the interrupt controller.

UART Interrupt Mask (UARTIM)

UART0 base: 0x4000.C000
UART1 base: 0x4000.D000
UART2 base: 0x4000.E000
Offset 0x038
Type R/W, reset 0x0000.0000

	31	30	29	28	27	26	25	24	23	22	21	20	19	18	17	16
	reserved															
Type	RO	RO	RO	RO	RO	RO	RO	RO	RO	RO	RO	RO	RO	RO	RO	RO
Reset	0	0	0	0	0	0	0	0	0	0	0	0	0	0	0	0

	15	14	13	12	11	10	9	8	7	6	5	4	3	2	1	0
	reserved					OEIM	BEIM	PEIM	FEIM	RTIM	TXIM	RXIM	reserved			
Type	RO	RO	RO	RO	RO	R/W	R/W	R/W	R/W	R/W	R/W	R/W	RO	RO	RO	RO
Reset	0	0	0	0	0	0	0	0	0	0	0	0	0	0	0	0

Bit/Field	Name	Type	Reset	Description
31:11	reserved	RO	0x00	Software should not rely on the value of a reserved bit. To provide compatibility with future products, the value of a reserved bit should be preserved across a read-modify-write operation.
10	OEIM	R/W	0	UART Overrun Error Interrupt Mask On a read, the current mask for the `OEIM` interrupt is returned. Setting this bit to 1 promotes the `OEIM` interrupt to the interrupt controller.
9	BEIM	R/W	0	UART Break Error Interrupt Mask On a read, the current mask for the `BEIM` interrupt is returned. Setting this bit to 1 promotes the `BEIM` interrupt to the interrupt controller.
8	PEIM	R/W	0	UART Parity Error Interrupt Mask On a read, the current mask for the `PEIM` interrupt is returned. Setting this bit to 1 promotes the `PEIM` interrupt to the interrupt controller.
7	FEIM	R/W	0	UART Framing Error Interrupt Mask On a read, the current mask for the `FEIM` interrupt is returned. Setting this bit to 1 promotes the `FEIM` interrupt to the interrupt controller.
6	RTIM	R/W	0	UART Receive Time-Out Interrupt Mask On a read, the current mask for the `RTIM` interrupt is returned. Setting this bit to 1 promotes the `RTIM` interrupt to the interrupt controller.
5	TXIM	R/W	0	UART Transmit Interrupt Mask On a read, the current mask for the `TXIM` interrupt is returned. Setting this bit to 1 promotes the `TXIM` interrupt to the interrupt controller.

Bit/Field	Name	Type	Reset	Description
4	RXIM	R/W	0	UART Receive Interrupt Mask On a read, the current mask for the `RXIM` interrupt is returned. Setting this bit to 1 promotes the `RXIM` interrupt to the interrupt controller.
3:0	reserved	RO	0x00	Software should not rely on the value of a reserved bit. To provide compatibility with future products, the value of a reserved bit should be preserved across a read-modify-write operation.

Register 11: UART Raw Interrupt Status (UARTRIS), offset 0x03C

The **UARTRIS** register is the raw interrupt status register. On a read, this register gives the current raw status value of the corresponding interrupt. A write has no effect.

UART Raw Interrupt Status (UARTRIS)

UART0 base: 0x4000.C000
UART1 base: 0x4000.D000
UART2 base: 0x4000.E000
Offset 0x03C
Type RO, reset 0x0000.000F

	31	30	29	28	27	26	25	24	23	22	21	20	19	18	17	16
	reserved															
Type	RO	RO	RO	RO	RO	RO	RO	RO	RO	RO	RO	RO	RO	RO	RO	RO
Reset	0	0	0	0	0	0	0	0	0	0	0	0	0	0	0	0

	15	14	13	12	11	10	9	8	7	6	5	4	3	2	1	0
	reserved					OERIS	BERIS	PERIS	FERIS	RTRIS	TXRIS	RXRIS	reserved			
Type	RO	RO	RO	RO	RO	RO	RO	RO	RO	RO	RO	RO	RO	RO	RO	RO
Reset	0	0	0	0	0	0	0	0	0	0	0	0	1	1	1	1

Bit/Field	Name	Type	Reset	Description
31:11	reserved	RO	0x00	Software should not rely on the value of a reserved bit. To provide compatibility with future products, the value of a reserved bit should be preserved across a read-modify-write operation.
10	OERIS	RO	0	UART Overrun Error Raw Interrupt Status Gives the raw interrupt state (prior to masking) of this interrupt.
9	BERIS	RO	0	UART Break Error Raw Interrupt Status Gives the raw interrupt state (prior to masking) of this interrupt.
8	PERIS	RO	0	UART Parity Error Raw Interrupt Status Gives the raw interrupt state (prior to masking) of this interrupt.
7	FERIS	RO	0	UART Framing Error Raw Interrupt Status Gives the raw interrupt state (prior to masking) of this interrupt.
6	RTRIS	RO	0	UART Receive Time-Out Raw Interrupt Status Gives the raw interrupt state (prior to masking) of this interrupt.
5	TXRIS	RO	0	UART Transmit Raw Interrupt Status Gives the raw interrupt state (prior to masking) of this interrupt.
4	RXRIS	RO	0	UART Receive Raw Interrupt Status Gives the raw interrupt state (prior to masking) of this interrupt.
3:0	reserved	RO	0xF	Software should not rely on the value of a reserved bit. To provide compatibility with future products, the value of a reserved bit should be preserved across a read-modify-write operation.

Register 12: UART Masked Interrupt Status (UARTMIS), offset 0x040

The **UARTMIS** register is the masked interrupt status register. On a read, this register gives the current masked status value of the corresponding interrupt. A write has no effect.

UART Masked Interrupt Status (UARTMIS)

UART0 base: 0x4000.C000
UART1 base: 0x4000.D000
UART2 base: 0x4000.E000
Offset 0x040
Type RO, reset 0x0000.0000

	31	30	29	28	27	26	25	24	23	22	21	20	19	18	17	16
	reserved															
Type	RO	RO	RO	RO	RO	RO	RO	RO	RO	RO	RO	RO	RO	RO	RO	RO
Reset	0	0	0	0	0	0	0	0	0	0	0	0	0	0	0	0

	15	14	13	12	11	10	9	8	7	6	5	4	3	2	1	0
	reserved					OEMIS	BEMIS	PEMIS	FEMIS	RTMIS	TXMIS	RXMIS	reserved			
Type	RO	RO	RO	RO	RO	RO	RO	RO	RO	RO	RO	RO	RO	RO	RO	RO
Reset	0	0	0	0	0	0	0	0	0	0	0	0	0	0	0	0

Bit/Field	Name	Type	Reset	Description
31:11	reserved	RO	0x00	Software should not rely on the value of a reserved bit. To provide compatibility with future products, the value of a reserved bit should be preserved across a read-modify-write operation.
10	OEMIS	RO	0	UART Overrun Error Masked Interrupt Status Gives the masked interrupt state of this interrupt.
9	BEMIS	RO	0	UART Break Error Masked Interrupt Status Gives the masked interrupt state of this interrupt.
8	PEMIS	RO	0	UART Parity Error Masked Interrupt Status Gives the masked interrupt state of this interrupt.
7	FEMIS	RO	0	UART Framing Error Masked Interrupt Status Gives the masked interrupt state of this interrupt.
6	RTMIS	RO	0	UART Receive Time-Out Masked Interrupt Status Gives the masked interrupt state of this interrupt.
5	TXMIS	RO	0	UART Transmit Masked Interrupt Status Gives the masked interrupt state of this interrupt.
4	RXMIS	RO	0	UART Receive Masked Interrupt Status Gives the masked interrupt state of this interrupt.
3:0	reserved	RO	0	Software should not rely on the value of a reserved bit. To provide compatibility with future products, the value of a reserved bit should be preserved across a read-modify-write operation.

Register 13: UART Interrupt Clear (UARTICR), offset 0x044

The **UARTICR** register is the interrupt clear register. On a write of 1, the corresponding interrupt (both raw interrupt and masked interrupt, if enabled) is cleared. A write of 0 has no effect.

UART Interrupt Clear (UARTICR)

UART0 base: 0x4000.C000
UART1 base: 0x4000.D000
UART2 base: 0x4000.E000
Offset 0x044
Type W1C, reset 0x0000.0000

	31	30	29	28	27	26	25	24	23	22	21	20	19	18	17	16
	reserved															
Type	RO	RO	RO	RO	RO	RO	RO	RO	RO	RO	RO	RO	RO	RO	RO	RO
Reset	0	0	0	0	0	0	0	0	0	0	0	0	0	0	0	0

	15	14	13	12	11	10	9	8	7	6	5	4	3	2	1	0
	reserved					OEIC	BEIC	PEIC	FEIC	RTIC	TXIC	RXIC	reserved			
Type	RO	RO	RO	RO	RO	W1C	W1C	W1C	W1C	W1C	W1C	W1C	RO	RO	RO	RO
Reset	0	0	0	0	0	0	0	0	0	0	0	0	0	0	0	0

Bit/Field	Name	Type	Reset	Description
31:11	reserved	RO	0x00	Software should not rely on the value of a reserved bit. To provide compatibility with future products, the value of a reserved bit should be preserved across a read-modify-write operation.
10	OEIC	W1C	0	Overrun Error Interrupt Clear The `OEIC` values are defined as follows: Value Description 0 No effect on the interrupt. 1 Clears interrupt.
9	BEIC	W1C	0	Break Error Interrupt Clear The `BEIC` values are defined as follows: Value Description 0 No effect on the interrupt. 1 Clears interrupt.
8	PEIC	W1C	0	Parity Error Interrupt Clear The `PEIC` values are defined as follows: Value Description 0 No effect on the interrupt. 1 Clears interrupt.

Bit/Field	Name	Type	Reset	Description
7	FEIC	W1C	0	Framing Error Interrupt Clear The `FEIC` values are defined as follows: Value Description 0 No effect on the interrupt. 1 Clears interrupt.
6	RTIC	W1C	0	Receive Time-Out Interrupt Clear The `RTIC` values are defined as follows: Value Description 0 No effect on the interrupt. 1 Clears interrupt.
5	TXIC	W1C	0	Transmit Interrupt Clear The `TXIC` values are defined as follows: Value Description 0 No effect on the interrupt. 1 Clears interrupt.
4	RXIC	W1C	0	Receive Interrupt Clear The `RXIC` values are defined as follows: Value Description 0 No effect on the interrupt. 1 Clears interrupt.
3:0	reserved	RO	0x00	Software should not rely on the value of a reserved bit. To provide compatibility with future products, the value of a reserved bit should be preserved across a read-modify-write operation.

Register 14: UART Peripheral Identification 4 (UARTPeriphID4), offset 0xFD0

The **UARTPeriphIDn** registers are hard-coded and the fields within the registers determine the reset values.

UART Peripheral Identification 4 (UARTPeriphID4)

UART0 base: 0x4000.C000
UART1 base: 0x4000.D000
UART2 base: 0x4000.E000
Offset 0xFD0
Type RO, reset 0x0000.0000

	31	30	29	28	27	26	25	24	23	22	21	20	19	18	17	16
	reserved															
Type	RO	RO	RO	RO	RO	RO	RO	RO	RO	RO	RO	RO	RO	RO	RO	RO
Reset	0	0	0	0	0	0	0	0	0	0	0	0	0	0	0	0

	15	14	13	12	11	10	9	8	7	6	5	4	3	2	1	0
	reserved								PID4							
Type	RO	RO	RO	RO	RO	RO	RO	RO	RO	RO	RO	RO	RO	RO	RO	RO
Reset	0	0	0	0	0	0	0	0	0	0	0	0	0	0	0	0

Bit/Field	Name	Type	Reset	Description
31:8	reserved	RO	0x00	Software should not rely on the value of a reserved bit. To provide compatibility with future products, the value of a reserved bit should be preserved across a read-modify-write operation.
7:0	PID4	RO	0x0000	UART Peripheral ID Register[7:0] Can be used by software to identify the presence of this peripheral.

Register 15: UART Peripheral Identification 5 (UARTPeriphID5), offset 0xFD4

The **UARTPeriphIDn** registers are hard-coded and the fields within the registers determine the reset values.

UART Peripheral Identification 5 (UARTPeriphID5)

UART0 base: 0x4000.C000
UART1 base: 0x4000.D000
UART2 base: 0x4000.E000
Offset 0xFD4
Type RO, reset 0x0000.0000

	31	30	29	28	27	26	25	24	23	22	21	20	19	18	17	16
	reserved															
Type	RO	RO	RO	RO	RO	RO	RO	RO	RO	RO	RO	RO	RO	RO	RO	RO
Reset	0	0	0	0	0	0	0	0	0	0	0	0	0	0	0	0

	15	14	13	12	11	10	9	8	7	6	5	4	3	2	1	0
	reserved								PID5							
Type	RO	RO	RO	RO	RO	RO	RO	RO	RO	RO	RO	RO	RO	RO	RO	RO
Reset	0	0	0	0	0	0	0	0	0	0	0	0	0	0	0	0

Bit/Field	Name	Type	Reset	Description
31:8	reserved	RO	0x00	Software should not rely on the value of a reserved bit. To provide compatibility with future products, the value of a reserved bit should be preserved across a read-modify-write operation.
7:0	PID5	RO	0x0000	UART Peripheral ID Register[15:8] Can be used by software to identify the presence of this peripheral.

Register 16: UART Peripheral Identification 6 (UARTPeriphID6), offset 0xFD8

The **UARTPeriphIDn** registers are hard-coded and the fields within the registers determine the reset values.

UART Peripheral Identification 6 (UARTPeriphID6)

UART0 base: 0x4000.C000
UART1 base: 0x4000.D000
UART2 base: 0x4000.E000
Offset 0xFD8
Type RO, reset 0x0000.0000

	31	30	29	28	27	26	25	24	23	22	21	20	19	18	17	16
	reserved															
Type	RO	RO	RO	RO	RO	RO	RO	RO	RO	RO	RO	RO	RO	RO	RO	RO
Reset	0	0	0	0	0	0	0	0	0	0	0	0	0	0	0	0

	15	14	13	12	11	10	9	8	7	6	5	4	3	2	1	0
	reserved								PID6							
Type	RO	RO	RO	RO	RO	RO	RO	RO	RO	RO	RO	RO	RO	RO	RO	RO
Reset	0	0	0	0	0	0	0	0	0	0	0	0	0	0	0	0

Bit/Field	Name	Type	Reset	Description
31:8	reserved	RO	0x00	Software should not rely on the value of a reserved bit. To provide compatibility with future products, the value of a reserved bit should be preserved across a read-modify-write operation.
7:0	PID6	RO	0x0000	UART Peripheral ID Register[23:16] Can be used by software to identify the presence of this peripheral.

Register 17: UART Peripheral Identification 7 (UARTPeriphID7), offset 0xFDC

The **UARTPeriphIDn** registers are hard-coded and the fields within the registers determine the reset values.

UART Peripheral Identification 7 (UARTPeriphID7)

UART0 base: 0x4000.C000
UART1 base: 0x4000.D000
UART2 base: 0x4000.E000
Offset 0xFDC
Type RO, reset 0x0000.0000

	31	30	29	28	27	26	25	24	23	22	21	20	19	18	17	16
	reserved															
Type	RO	RO	RO	RO	RO	RO	RO	RO	RO	RO	RO	RO	RO	RO	RO	RO
Reset	0	0	0	0	0	0	0	0	0	0	0	0	0	0	0	0

	15	14	13	12	11	10	9	8	7	6	5	4	3	2	1	0
	reserved								PID7							
Type	RO	RO	RO	RO	RO	RO	RO	RO	RO	RO	RO	RO	RO	RO	RO	RO
Reset	0	0	0	0	0	0	0	0	0	0	0	0	0	0	0	0

Bit/Field	Name	Type	Reset	Description
31:8	reserved	RO	0	Software should not rely on the value of a reserved bit. To provide compatibility with future products, the value of a reserved bit should be preserved across a read-modify-write operation.
7:0	PID7	RO	0x0000	UART Peripheral ID Register[31:24] Can be used by software to identify the presence of this peripheral.

Register 18: UART Peripheral Identification 0 (UARTPeriphID0), offset 0xFE0

The **UARTPeriphIDn** registers are hard-coded and the fields within the registers determine the reset values.

UART Peripheral Identification 0 (UARTPeriphID0)

UART0 base: 0x4000.C000
UART1 base: 0x4000.D000
UART2 base: 0x4000.E000
Offset 0xFE0
Type RO, reset 0x0000.0011

	31	30	29	28	27	26	25	24	23	22	21	20	19	18	17	16
	reserved															
Type	RO	RO	RO	RO	RO	RO	RO	RO	RO	RO	RO	RO	RO	RO	RO	RO
Reset	0	0	0	0	0	0	0	0	0	0	0	0	0	0	0	0

	15	14	13	12	11	10	9	8	7	6	5	4	3	2	1	0
	reserved								PID0							
Type	RO	RO	RO	RO	RO	RO	RO	RO	RO	RO	RO	RO	RO	RO	RO	RO
Reset	0	0	0	0	0	0	0	0	0	0	0	1	0	0	0	1

Bit/Field	Name	Type	Reset	Description
31:8	reserved	RO	0x00	Software should not rely on the value of a reserved bit. To provide compatibility with future products, the value of a reserved bit should be preserved across a read-modify-write operation.
7:0	PID0	RO	0x11	UART Peripheral ID Register[7:0] Can be used by software to identify the presence of this peripheral.

Register 19: UART Peripheral Identification 1 (UARTPeriphID1), offset 0xFE4

The **UARTPeriphIDn** registers are hard-coded and the fields within the registers determine the reset values.

UART Peripheral Identification 1 (UARTPeriphID1)

UART0 base: 0x4000.C000
UART1 base: 0x4000.D000
UART2 base: 0x4000.E000
Offset 0xFE4
Type RO, reset 0x0000.0000

	31	30	29	28	27	26	25	24	23	22	21	20	19	18	17	16
	reserved															
Type	RO	RO	RO	RO	RO	RO	RO	RO	RO	RO	RO	RO	RO	RO	RO	RO
Reset	0	0	0	0	0	0	0	0	0	0	0	0	0	0	0	0

	15	14	13	12	11	10	9	8	7	6	5	4	3	2	1	0
	reserved								PID1							
Type	RO	RO	RO	RO	RO	RO	RO	RO	RO	RO	RO	RO	RO	RO	RO	RO
Reset	0	0	0	0	0	0	0	0	0	0	0	0	0	0	0	0

Bit/Field	Name	Type	Reset	Description
31:8	reserved	RO	0x00	Software should not rely on the value of a reserved bit. To provide compatibility with future products, the value of a reserved bit should be preserved across a read-modify-write operation.
7:0	PID1	RO	0x00	UART Peripheral ID Register[15:8] Can be used by software to identify the presence of this peripheral.

Register 20: UART Peripheral Identification 2 (UARTPeriphID2), offset 0xFE8

The **UARTPeriphIDn** registers are hard-coded and the fields within the registers determine the reset values.

UART Peripheral Identification 2 (UARTPeriphID2)

UART0 base: 0x4000.C000
UART1 base: 0x4000.D000
UART2 base: 0x4000.E000
Offset 0xFE8
Type RO, reset 0x0000.0018

	31	30	29	28	27	26	25	24	23	22	21	20	19	18	17	16
	reserved															
Type	RO	RO	RO	RO	RO	RO	RO	RO	RO	RO	RO	RO	RO	RO	RO	RO
Reset	0	0	0	0	0	0	0	0	0	0	0	0	0	0	0	0

	15	14	13	12	11	10	9	8	7	6	5	4	3	2	1	0
	reserved								PID2							
Type	RO	RO	RO	RO	RO	RO	RO	RO	RO	RO	RO	RO	RO	RO	RO	RO
Reset	0	0	0	0	0	0	0	0	0	0	0	1	1	0	0	0

Bit/Field	Name	Type	Reset	Description
31:8	reserved	RO	0x00	Software should not rely on the value of a reserved bit. To provide compatibility with future products, the value of a reserved bit should be preserved across a read-modify-write operation.
7:0	PID2	RO	0x18	UART Peripheral ID Register[23:16] Can be used by software to identify the presence of this peripheral.

Register 21: UART Peripheral Identification 3 (UARTPeriphID3), offset 0xFEC

The **UARTPeriphIDn** registers are hard-coded and the fields within the registers determine the reset values.

UART Peripheral Identification 3 (UARTPeriphID3)

UART0 base: 0x4000.C000
UART1 base: 0x4000.D000
UART2 base: 0x4000.E000
Offset 0xFEC
Type RO, reset 0x0000.0001

	31	30	29	28	27	26	25	24	23	22	21	20	19	18	17	16
	reserved															
Type	RO	RO	RO	RO	RO	RO	RO	RO	RO	RO	RO	RO	RO	RO	RO	RO
Reset	0	0	0	0	0	0	0	0	0	0	0	0	0	0	0	0

	15	14	13	12	11	10	9	8	7	6	5	4	3	2	1	0
	reserved								PID3							
Type	RO	RO	RO	RO	RO	RO	RO	RO	RO	RO	RO	RO	RO	RO	RO	RO
Reset	0	0	0	0	0	0	0	0	0	0	0	0	0	0	0	1

Bit/Field	Name	Type	Reset	Description
31:8	reserved	RO	0x00	Software should not rely on the value of a reserved bit. To provide compatibility with future products, the value of a reserved bit should be preserved across a read-modify-write operation.
7:0	PID3	RO	0x01	UART Peripheral ID Register[31:24] Can be used by software to identify the presence of this peripheral.

Register 22: UART PrimeCell Identification 0 (UARTPCellID0), offset 0xFF0

The **UARTPCellIDn** registers are hard-coded and the fields within the registers determine the reset values.

UART PrimeCell Identification 0 (UARTPCellID0)

UART0 base: 0x4000.C000
UART1 base: 0x4000.D000
UART2 base: 0x4000.E000
Offset 0xFF0
Type RO, reset 0x0000.000D

	31	30	29	28	27	26	25	24	23	22	21	20	19	18	17	16
	reserved															
Type	RO	RO	RO	RO	RO	RO	RO	RO	RO	RO	RO	RO	RO	RO	RO	RO
Reset	0	0	0	0	0	0	0	0	0	0	0	0	0	0	0	0

	15	14	13	12	11	10	9	8	7	6	5	4	3	2	1	0
	reserved								CID0							
Type	RO	RO	RO	RO	RO	RO	RO	RO	RO	RO	RO	RO	RO	RO	RO	RO
Reset	0	0	0	0	0	0	0	0	0	0	0	0	1	1	0	1

Bit/Field	Name	Type	Reset	Description
31:8	reserved	RO	0x00	Software should not rely on the value of a reserved bit. To provide compatibility with future products, the value of a reserved bit should be preserved across a read-modify-write operation.
7:0	CID0	RO	0x0D	UART PrimeCell ID Register[7:0] Provides software a standard cross-peripheral identification system.

Register 23: UART PrimeCell Identification 1 (UARTPCellID1), offset 0xFF4

The **UARTPCellIDn** registers are hard-coded and the fields within the registers determine the reset values.

UART PrimeCell Identification 1 (UARTPCellID1)

UART0 base: 0x4000.C000
UART1 base: 0x4000.D000
UART2 base: 0x4000.E000
Offset 0xFF4
Type RO, reset 0x0000.00F0

	31	30	29	28	27	26	25	24	23	22	21	20	19	18	17	16
	reserved															
Type	RO	RO	RO	RO	RO	RO	RO	RO	RO	RO	RO	RO	RO	RO	RO	RO
Reset	0	0	0	0	0	0	0	0	0	0	0	0	0	0	0	0

	15	14	13	12	11	10	9	8	7	6	5	4	3	2	1	0
	reserved								CID1							
Type	RO	RO	RO	RO	RO	RO	RO	RO	RO	RO	RO	RO	RO	RO	RO	RO
Reset	0	0	0	0	0	0	0	0	1	1	1	1	0	0	0	0

Bit/Field	Name	Type	Reset	Description
31:8	reserved	RO	0x00	Software should not rely on the value of a reserved bit. To provide compatibility with future products, the value of a reserved bit should be preserved across a read-modify-write operation.
7:0	CID1	RO	0xF0	UART PrimeCell ID Register[15:8] Provides software a standard cross-peripheral identification system.

Register 24: UART PrimeCell Identification 2 (UARTPCellID2), offset 0xFF8

The **UARTPCellIDn** registers are hard-coded and the fields within the registers determine the reset values.

UART PrimeCell Identification 2 (UARTPCellID2)

UART0 base: 0x4000.C000
UART1 base: 0x4000.D000
UART2 base: 0x4000.E000
Offset 0xFF8
Type RO, reset 0x0000.0005

	31	30	29	28	27	26	25	24	23	22	21	20	19	18	17	16
	reserved															
Type	RO	RO	RO	RO	RO	RO	RO	RO	RO	RO	RO	RO	RO	RO	RO	RO
Reset	0	0	0	0	0	0	0	0	0	0	0	0	0	0	0	0

	15	14	13	12	11	10	9	8	7	6	5	4	3	2	1	0
	reserved								CID2							
Type	RO	RO	RO	RO	RO	RO	RO	RO	RO	RO	RO	RO	RO	RO	RO	RO
Reset	0	0	0	0	0	0	0	0	0	0	0	0	0	1	0	1

Bit/Field	Name	Type	Reset	Description
31:8	reserved	RO	0x00	Software should not rely on the value of a reserved bit. To provide compatibility with future products, the value of a reserved bit should be preserved across a read-modify-write operation.
7:0	CID2	RO	0x05	UART PrimeCell ID Register[23:16] Provides software a standard cross-peripheral identification system.

Register 25: UART PrimeCell Identification 3 (UARTPCellID3), offset 0xFFC

The **UARTPCellIDn** registers are hard-coded and the fields within the registers determine the reset values.

UART PrimeCell Identification 3 (UARTPCellID3)

UART0 base: 0x4000.C000
UART1 base: 0x4000.D000
UART2 base: 0x4000.E000
Offset 0xFFC
Type RO, reset 0x0000.00B1

	31	30	29	28	27	26	25	24	23	22	21	20	19	18	17	16
	reserved															
Type	RO	RO	RO	RO	RO	RO	RO	RO	RO	RO	RO	RO	RO	RO	RO	RO
Reset	0	0	0	0	0	0	0	0	0	0	0	0	0	0	0	0

	15	14	13	12	11	10	9	8	7	6	5	4	3	2	1	0
	reserved								CID3							
Type	RO	RO	RO	RO	RO	RO	RO	RO	RO	RO	RO	RO	RO	RO	RO	RO
Reset	0	0	0	0	0	0	0	0	1	0	1	1	0	0	0	1

Bit/Field	Name	Type	Reset	Description
31:8	reserved	RO	0x00	Software should not rely on the value of a reserved bit. To provide compatibility with future products, the value of a reserved bit should be preserved across a read-modify-write operation.
7:0	CID3	RO	0xB1	UART PrimeCell ID Register[31:24] Provides software a standard cross-peripheral identification system.

12 Synchronous Serial Interface (SSI)

The Stellaris® microcontroller includes two Synchronous Serial Interface (SSI) modules. Each SSI is a master or slave interface for synchronous serial communication with peripheral devices that have either Freescale SPI, MICROWIRE, or Texas Instruments synchronous serial interfaces.

Each Stellaris SSI module has the following features:

- Two SSI modules, each with the following features:
- Master or slave operation
- Programmable clock bit rate and prescale
- Separate transmit and receive FIFOs, 16 bits wide, 8 locations deep
- Programmable interface operation for Freescale SPI, MICROWIRE, or Texas Instruments synchronous serial interfaces
- Programmable data frame size from 4 to 16 bits
- Internal loopback test mode for diagnostic/debug testing

12.1 Block Diagram

Figure 12-1. SSI Module Block Diagram

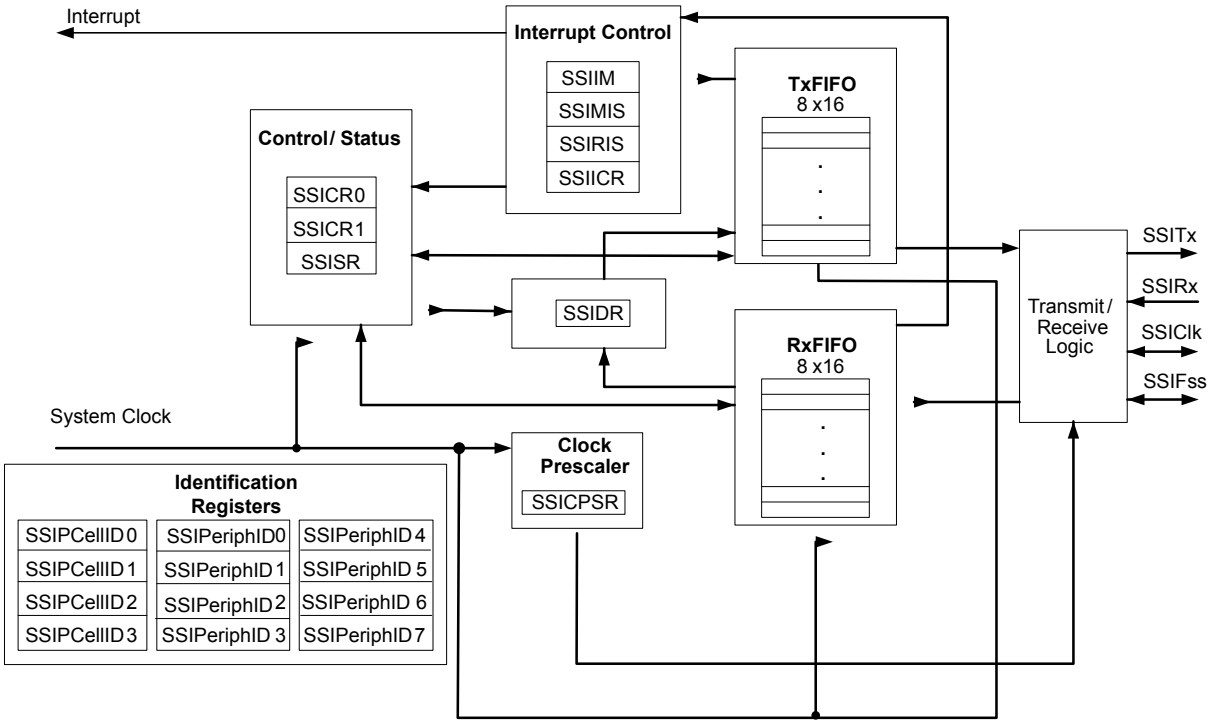

12.2 Signal Description

Table 12-1 on page 431 and Table 12-2 on page 431 list the external signals of the SSI module and describe the function of each. The SSI signals are alternate functions for some GPIO signals and default to be GPIO signals at reset., with the exception of the SSI0Clk, SSI0Fss, SSI0Rx, and SSI0Tx pins which default to the SSI function. The column in the table below titled "Pin Assignment" lists the possible GPIO pin placements for the SSI signals. The AFSEL bit in the **GPIO Alternate Function Select (GPIOAFSEL)** register (page 301) should be set to choose the SSI function. For more information on configuring GPIOs, see “General-Purpose Input/Outputs (GPIOs)” on page 278.

Table 12-1. SSI Signals (100LQFP)

Pin Name	Pin Number	Pin Type	Buffer Type[a]	Description
SSI0Clk	28	I/O	TTL	SSI module 0 clock.
SSI0Fss	29	I/O	TTL	SSI module 0 frame.
SSI0Rx	30	I	TTL	SSI module 0 receive.
SSI0Tx	31	O	TTL	SSI module 0 transmit.
SSI1Clk	72	I/O	TTL	SSI module 1 clock.
SSI1Fss	73	I/O	TTL	SSI module 1 frame.
SSI1Rx	74	I	TTL	SSI module 1 receive.
SSI1Tx	75	O	TTL	SSI module 1 transmit.

a. The TTL designation indicates the pin has TTL-compatible voltage levels.

Table 12-2. SSI Signals (108BGA)

Pin Name	Pin Number	Pin Type	Buffer Type[a]	Description
SSI0Clk	M4	I/O	TTL	SSI module 0 clock.
SSI0Fss	L4	I/O	TTL	SSI module 0 frame.
SSI0Rx	L5	I	TTL	SSI module 0 receive.
SSI0Tx	M5	O	TTL	SSI module 0 transmit.
SSI1Clk	A11	I/O	TTL	SSI module 1 clock.
SSI1Fss	B12	I/O	TTL	SSI module 1 frame.
SSI1Rx	B11	I	TTL	SSI module 1 receive.
SSI1Tx	A12	O	TTL	SSI module 1 transmit.

a. The TTL designation indicates the pin has TTL-compatible voltage levels.

12.3 Functional Description

The SSI performs serial-to-parallel conversion on data received from a peripheral device. The CPU accesses data, control, and status information. The transmit and receive paths are buffered with internal FIFO memories allowing up to eight 16-bit values to be stored independently in both transmit and receive modes.

12.3.1 Bit Rate Generation

The SSI includes a programmable bit rate clock divider and prescaler to generate the serial output clock. Bit rates are supported to 2 MHz and higher, although maximum bit rate is determined by peripheral devices.

The serial bit rate is derived by dividing down the input clock (FSysClk). The clock is first divided by an even prescale value CPSDVSR from 2 to 254, which is programmed in the **SSI Clock Prescale**

(SSICPSR) register (see page 450). The clock is further divided by a value from 1 to 256, which is 1 + *SCR*, where *SCR* is the value programmed in the **SSI Control0 (SSICR0)** register (see page 443).

The frequency of the output clock `SSIClk` is defined by:

```
SSIClk = FSysClk / (CPSDVSR * (1 + SCR))
```

Note: For master mode, the system clock must be at least two times faster than the `SSIClk`. For slave mode, the system clock must be at least 12 times faster than the `SSIClk`.

See “Synchronous Serial Interface (SSI)” on page 603 to view SSI timing parameters.

12.3.2 FIFO Operation

12.3.2.1 Transmit FIFO

The common transmit FIFO is a 16-bit wide, 8-locations deep, first-in, first-out memory buffer. The CPU writes data to the FIFO by writing the **SSI Data (SSIDR)** register (see page 447), and data is stored in the FIFO until it is read out by the transmission logic.

When configured as a master or a slave, parallel data is written into the transmit FIFO prior to serial conversion and transmission to the attached slave or master, respectively, through the `SSITx` pin.

In slave mode, the SSI transmits data each time the master initiates a transaction. If the transmit FIFO is empty and the master initiates, the slave transmits the 8th most recent value in the transmit FIFO. If less than 8 values have been written to the transmit FIFO since the SSI module clock was enabled using the `SSI` bit in the **RGCG1** register, then 0 is transmitted. Care should be taken to ensure that valid data is in the FIFO as needed. The SSI can be configured to generate an interrupt or a µDMA request when the FIFO is empty.

12.3.2.2 Receive FIFO

The common receive FIFO is a 16-bit wide, 8-locations deep, first-in, first-out memory buffer. Received data from the serial interface is stored in the buffer until read out by the CPU, which accesses the read FIFO by reading the **SSIDR** register.

When configured as a master or slave, serial data received through the `SSIRx` pin is registered prior to parallel loading into the attached slave or master receive FIFO, respectively.

12.3.3 Interrupts

The SSI can generate interrupts when the following conditions are observed:

- Transmit FIFO service
- Receive FIFO service
- Receive FIFO time-out
- Receive FIFO overrun

All of the interrupt events are ORed together before being sent to the interrupt controller, so the SSI can only generate a single interrupt request to the controller at any given time. You can mask each of the four individual maskable interrupts by setting the appropriate bits in the **SSI Interrupt Mask (SSIIM)** register (see page 451). Setting the appropriate mask bit to 1 enables the interrupt.

Provision of the individual outputs, as well as a combined interrupt output, allows use of either a global interrupt service routine, or modular device drivers to handle interrupts. The transmit and

receive dynamic dataflow interrupts have been separated from the status interrupts so that data can be read or written in response to the FIFO trigger levels. The status of the individual interrupt sources can be read from the **SSI Raw Interrupt Status (SSIRIS)** and **SSI Masked Interrupt Status (SSIMIS)** registers (see page 453 and page 454, respectively).

12.3.4 Frame Formats

Each data frame is between 4 and 16 bits long, depending on the size of data programmed, and is transmitted starting with the MSB. There are three basic frame types that can be selected:

- Texas Instruments synchronous serial
- Freescale SPI
- MICROWIRE

For all three formats, the serial clock (`SSIClk`) is held inactive while the SSI is idle, and `SSIClk` transitions at the programmed frequency only during active transmission or reception of data. The idle state of `SSIClk` is utilized to provide a receive timeout indication that occurs when the receive FIFO still contains data after a timeout period.

For Freescale SPI and MICROWIRE frame formats, the serial frame (`SSIFss`) pin is active Low, and is asserted (pulled down) during the entire transmission of the frame.

For Texas Instruments synchronous serial frame format, the `SSIFss` pin is pulsed for one serial clock period starting at its rising edge, prior to the transmission of each frame. For this frame format, both the SSI and the off-chip slave device drive their output data on the rising edge of `SSIClk`, and latch data from the other device on the falling edge.

Unlike the full-duplex transmission of the other two frame formats, the MICROWIRE format uses a special master-slave messaging technique, which operates at half-duplex. In this mode, when a frame begins, an 8-bit control message is transmitted to the off-chip slave. During this transmit, no incoming data is received by the SSI. After the message has been sent, the off-chip slave decodes it and, after waiting one serial clock after the last bit of the 8-bit control message has been sent, responds with the requested data. The returned data can be 4 to 16 bits in length, making the total frame length anywhere from 13 to 25 bits.

12.3.4.1 Texas Instruments Synchronous Serial Frame Format

Figure 12-2 on page 433 shows the Texas Instruments synchronous serial frame format for a single transmitted frame.

Figure 12-2. TI Synchronous Serial Frame Format (Single Transfer)

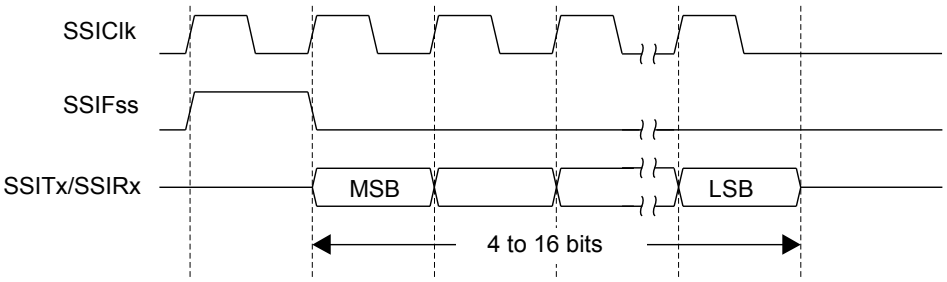

In this mode, `SSIClk` and `SSIFss` are forced Low, and the transmit data line `SSITx` is tristated whenever the SSI is idle. Once the bottom entry of the transmit FIFO contains data, `SSIFss` is

pulsed High for one SSIClk period. The value to be transmitted is also transferred from the transmit FIFO to the serial shift register of the transmit logic. On the next rising edge of SSIClk, the MSB of the 4 to 16-bit data frame is shifted out on the SSITx pin. Likewise, the MSB of the received data is shifted onto the SSIRx pin by the off-chip serial slave device.

Both the SSI and the off-chip serial slave device then clock each data bit into their serial shifter on the falling edge of each SSIClk. The received data is transferred from the serial shifter to the receive FIFO on the first rising edge of SSIClk after the LSB has been latched.

Figure 12-3 on page 434 shows the Texas Instruments synchronous serial frame format when back-to-back frames are transmitted.

Figure 12-3. TI Synchronous Serial Frame Format (Continuous Transfer)

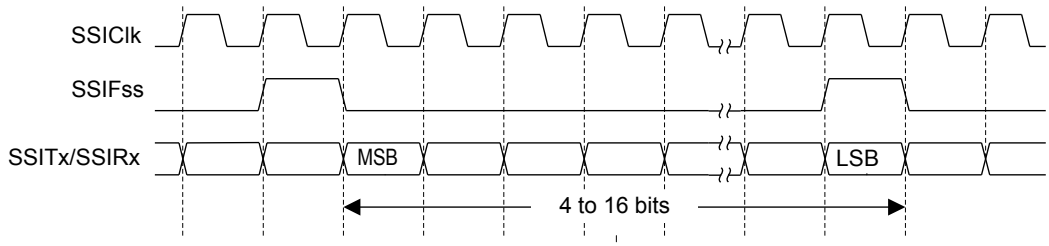

12.3.4.2 Freescale SPI Frame Format

The Freescale SPI interface is a four-wire interface where the SSIFss signal behaves as a slave select. The main feature of the Freescale SPI format is that the inactive state and phase of the SSIClk signal are programmable through the SPO and SPH bits within the **SSISCR0** control register.

SPO Clock Polarity Bit

When the SPO clock polarity control bit is Low, it produces a steady state Low value on the SSIClk pin. If the SPO bit is High, a steady state High value is placed on the SSIClk pin when data is not being transferred.

SPH Phase Control Bit

The SPH phase control bit selects the clock edge that captures data and allows it to change state. It has the most impact on the first bit transmitted by either allowing or not allowing a clock transition before the first data capture edge. When the SPH phase control bit is Low, data is captured on the first clock edge transition. If the SPH bit is High, data is captured on the second clock edge transition.

12.3.4.3 Freescale SPI Frame Format with SPO=0 and SPH=0

Single and continuous transmission signal sequences for Freescale SPI format with SPO=0 and SPH=0 are shown in Figure 12-4 on page 435 and Figure 12-5 on page 435.

Figure 12-4. Freescale SPI Format (Single Transfer) with SPO=0 and SPH=0

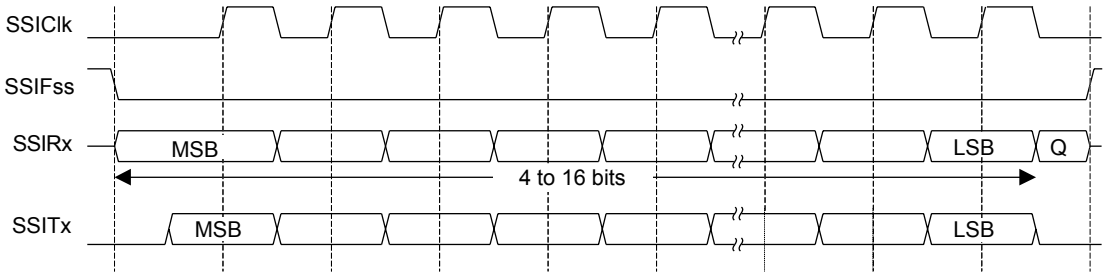

Note: Q is undefined.

Figure 12-5. Freescale SPI Format (Continuous Transfer) with SPO=0 and SPH=0

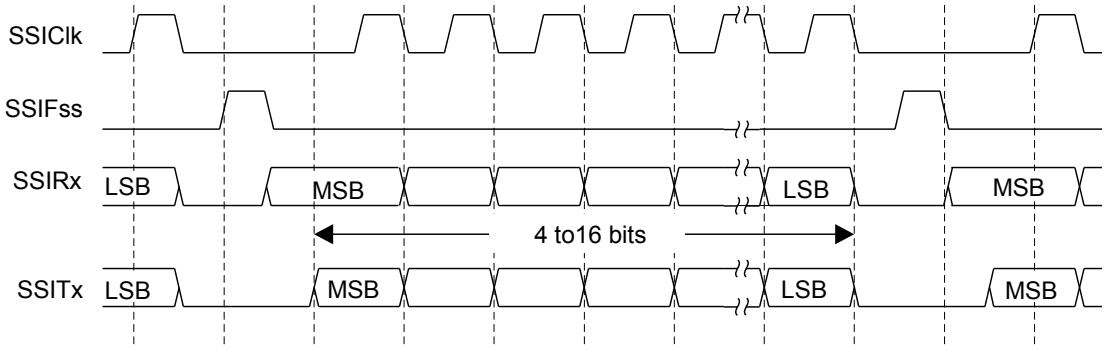

In this configuration, during idle periods:

- `SSIClk` is forced Low
- `SSIFss` is forced High
- The transmit data line `SSITx` is arbitrarily forced Low
- When the SSI is configured as a master, it enables the `SSIClk` pad
- When the SSI is configured as a slave, it disables the `SSIClk` pad

If the SSI is enabled and there is valid data within the transmit FIFO, the start of transmission is signified by the `SSIFss` master signal being driven Low. This causes slave data to be enabled onto the `SSIRx` input line of the master. The master `SSITx` output pad is enabled.

One half `SSIClk` period later, valid master data is transferred to the `SSITx` pin. Now that both the master and slave data have been set, the `SSIClk` master clock pin goes High after one further half `SSIClk` period.

The data is now captured on the rising and propagated on the falling edges of the `SSIClk` signal.

In the case of a single word transmission, after all bits of the data word have been transferred, the `SSIFss` line is returned to its idle High state one `SSIClk` period after the last bit has been captured.

However, in the case of continuous back-to-back transmissions, the `SSIFss` signal must be pulsed High between each data word transfer. This is because the slave select pin freezes the data in its serial peripheral register and does not allow it to be altered if the `SPH` bit is logic zero. Therefore, the master device must raise the `SSIFss` pin of the slave device between each data transfer to

enable the serial peripheral data write. On completion of the continuous transfer, the SSIFss pin is returned to its idle state one SSIClk period after the last bit has been captured.

12.3.4.4 Freescale SPI Frame Format with SPO=0 and SPH=1

The transfer signal sequence for Freescale SPI format with SPO=0 and SPH=1 is shown in Figure 12-6 on page 436, which covers both single and continuous transfers.

Figure 12-6. Freescale SPI Frame Format with SPO=0 and SPH=1

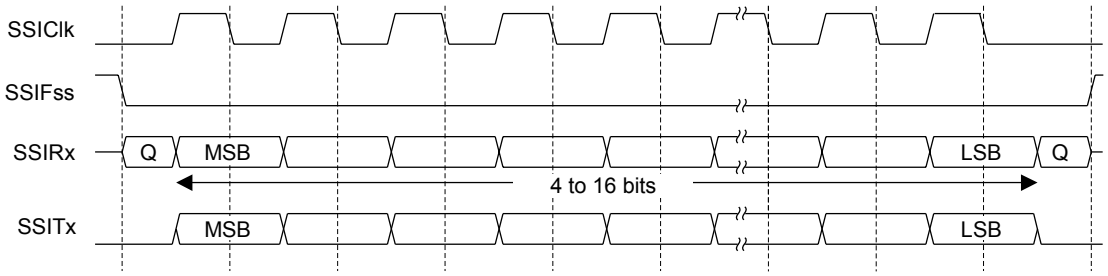

Note: Q is undefined.

In this configuration, during idle periods:

- SSIClk is forced Low
- SSIFss is forced High
- The transmit data line SSITx is arbitrarily forced Low
- When the SSI is configured as a master, it enables the SSIClk pad
- When the SSI is configured as a slave, it disables the SSIClk pad

If the SSI is enabled and there is valid data within the transmit FIFO, the start of transmission is signified by the SSIFss master signal being driven Low. The master SSITx output is enabled. After a further one half SSIClk period, both master and slave valid data is enabled onto their respective transmission lines. At the same time, the SSIClk is enabled with a rising edge transition.

Data is then captured on the falling edges and propagated on the rising edges of the SSIClk signal.

In the case of a single word transfer, after all bits have been transferred, the SSIFss line is returned to its idle High state one SSIClk period after the last bit has been captured.

For continuous back-to-back transfers, the SSIFss pin is held Low between successive data words and termination is the same as that of the single word transfer.

12.3.4.5 Freescale SPI Frame Format with SPO=1 and SPH=0

Single and continuous transmission signal sequences for Freescale SPI format with SPO=1 and SPH=0 are shown in Figure 12-7 on page 437 and Figure 12-8 on page 437.

Figure 12-7. Freescale SPI Frame Format (Single Transfer) with SPO=1 and SPH=0

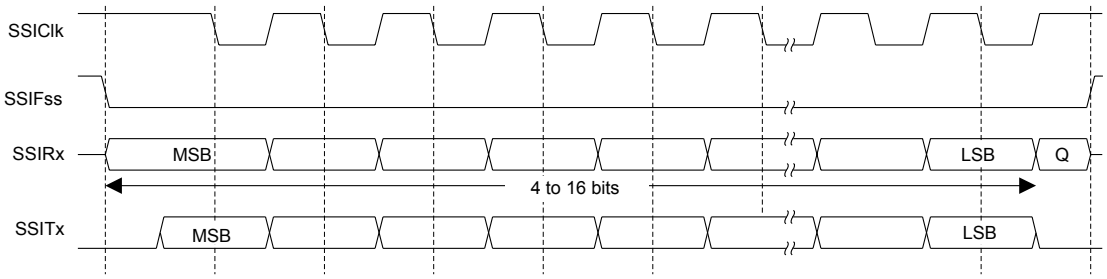

Note: Q is undefined.

Figure 12-8. Freescale SPI Frame Format (Continuous Transfer) with SPO=1 and SPH=0

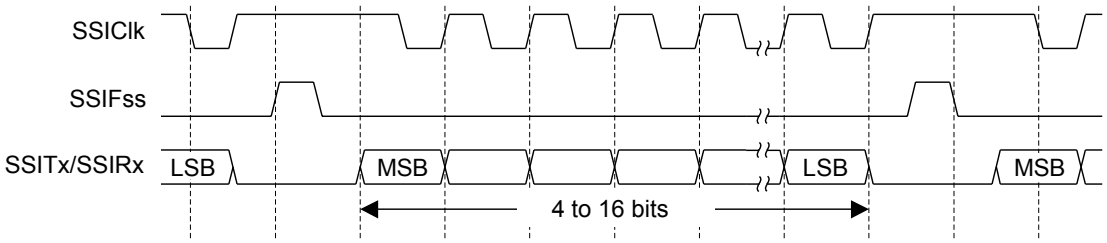

In this configuration, during idle periods:

- `SSIClk` is forced High
- `SSIFss` is forced High
- The transmit data line `SSITx` is arbitrarily forced Low
- When the SSI is configured as a master, it enables the `SSIClk` pad
- When the SSI is configured as a slave, it disables the `SSIClk` pad

If the SSI is enabled and there is valid data within the transmit FIFO, the start of transmission is signified by the `SSIFss` master signal being driven Low, which causes slave data to be immediately transferred onto the `SSIRx` line of the master. The master `SSITx` output pad is enabled.

One half period later, valid master data is transferred to the `SSITx` line. Now that both the master and slave data have been set, the `SSIClk` master clock pin becomes Low after one further half `SSIClk` period. This means that data is captured on the falling edges and propagated on the rising edges of the `SSIClk` signal.

In the case of a single word transmission, after all bits of the data word are transferred, the `SSIFss` line is returned to its idle High state one `SSIClk` period after the last bit has been captured.

However, in the case of continuous back-to-back transmissions, the `SSIFss` signal must be pulsed High between each data word transfer. This is because the slave select pin freezes the data in its serial peripheral register and does not allow it to be altered if the `SPH` bit is logic zero. Therefore, the master device must raise the `SSIFss` pin of the slave device between each data transfer to enable the serial peripheral data write. On completion of the continuous transfer, the `SSIFss` pin is returned to its idle state one `SSIClk` period after the last bit has been captured.

12.3.4.6 Freescale SPI Frame Format with SPO=1 and SPH=1

The transfer signal sequence for Freescale SPI format with SPO=1 and SPH=1 is shown in Figure 12-9 on page 438, which covers both single and continuous transfers.

Figure 12-9. Freescale SPI Frame Format with SPO=1 and SPH=1

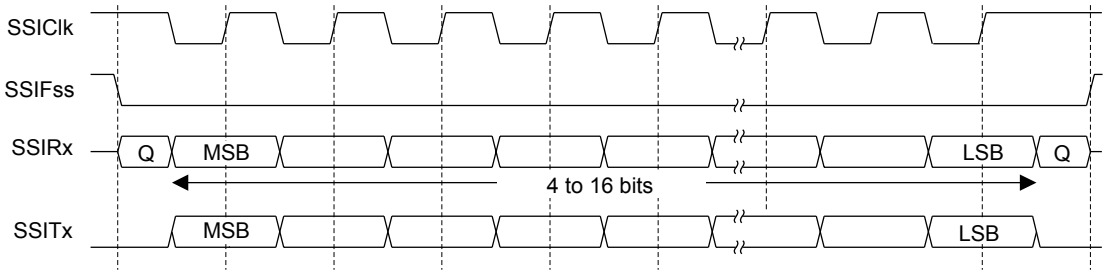

Note: Q is undefined.

In this configuration, during idle periods:

- `SSIClk` is forced High
- `SSIFss` is forced High
- The transmit data line `SSITx` is arbitrarily forced Low
- When the SSI is configured as a master, it enables the `SSIClk` pad
- When the SSI is configured as a slave, it disables the `SSIClk` pad

If the SSI is enabled and there is valid data within the transmit FIFO, the start of transmission is signified by the `SSIFss` master signal being driven Low. The master `SSITx` output pad is enabled. After a further one-half `SSIClk` period, both master and slave data are enabled onto their respective transmission lines. At the same time, `SSIClk` is enabled with a falling edge transition. Data is then captured on the rising edges and propagated on the falling edges of the `SSIClk` signal.

After all bits have been transferred, in the case of a single word transmission, the `SSIFss` line is returned to its idle high state one `SSIClk` period after the last bit has been captured.

For continuous back-to-back transmissions, the `SSIFss` pin remains in its active Low state, until the final bit of the last word has been captured, and then returns to its idle state as described above.

For continuous back-to-back transfers, the `SSIFss` pin is held Low between successive data words and termination is the same as that of the single word transfer.

12.3.4.7 MICROWIRE Frame Format

Figure 12-10 on page 439 shows the MICROWIRE frame format, again for a single frame. Figure 12-11 on page 440 shows the same format when back-to-back frames are transmitted.

Figure 12-10. MICROWIRE Frame Format (Single Frame)

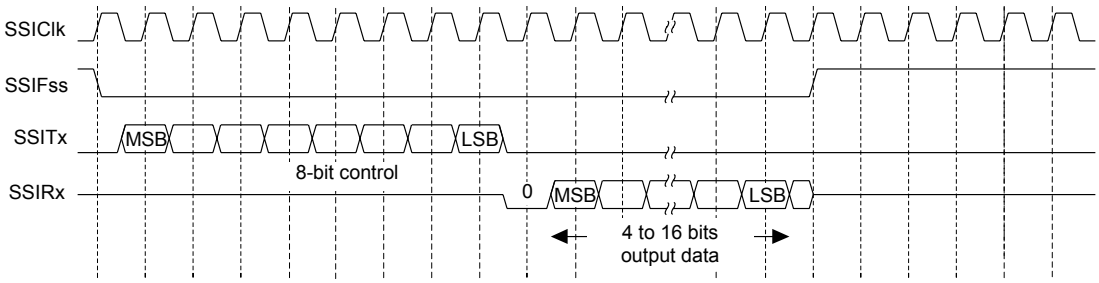

MICROWIRE format is very similar to SPI format, except that transmission is half-duplex instead of full-duplex, using a master-slave message passing technique. Each serial transmission begins with an 8-bit control word that is transmitted from the SSI to the off-chip slave device. During this transmission, no incoming data is received by the SSI. After the message has been sent, the off-chip slave decodes it and, after waiting one serial clock after the last bit of the 8-bit control message has been sent, responds with the required data. The returned data is 4 to 16 bits in length, making the total frame length anywhere from 13 to 25 bits.

In this configuration, during idle periods:

- `SSIClk` is forced Low
- `SSIFss` is forced High
- The transmit data line `SSITx` is arbitrarily forced Low

A transmission is triggered by writing a control byte to the transmit FIFO. The falling edge of `SSIFss` causes the value contained in the bottom entry of the transmit FIFO to be transferred to the serial shift register of the transmit logic, and the MSB of the 8-bit control frame to be shifted out onto the `SSITx` pin. `SSIFss` remains Low for the duration of the frame transmission. The `SSIRx` pin remains tristated during this transmission.

The off-chip serial slave device latches each control bit into its serial shifter on the rising edge of each `SSIClk`. After the last bit is latched by the slave device, the control byte is decoded during a one clock wait-state, and the slave responds by transmitting data back to the SSI. Each bit is driven onto the `SSIRx` line on the falling edge of `SSIClk`. The SSI in turn latches each bit on the rising edge of `SSIClk`. At the end of the frame, for single transfers, the `SSIFss` signal is pulled High one clock period after the last bit has been latched in the receive serial shifter, which causes the data to be transferred to the receive FIFO.

Note: The off-chip slave device can tristate the receive line either on the falling edge of `SSIClk` after the LSB has been latched by the receive shifter, or when the `SSIFss` pin goes High.

For continuous transfers, data transmission begins and ends in the same manner as a single transfer. However, the `SSIFss` line is continuously asserted (held Low) and transmission of data occurs back-to-back. The control byte of the next frame follows directly after the LSB of the received data from the current frame. Each of the received values is transferred from the receive shifter on the falling edge of `SSIClk`, after the LSB of the frame has been latched into the SSI.

Figure 12-11. MICROWIRE Frame Format (Continuous Transfer)

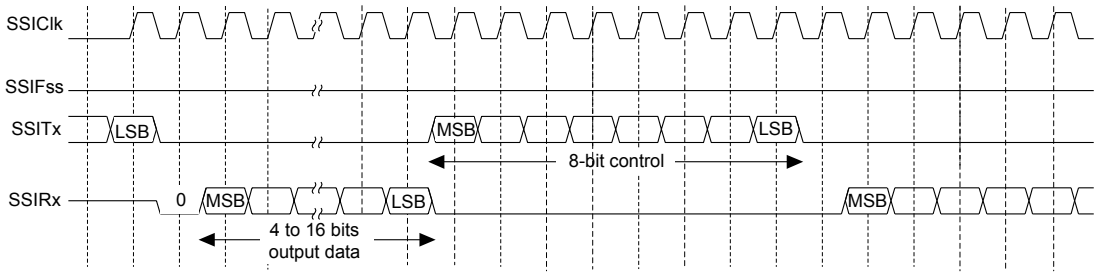

In the MICROWIRE mode, the SSI slave samples the first bit of receive data on the rising edge of `SSIClk` after `SSIFss` has gone Low. Masters that drive a free-running `SSIClk` must ensure that the `SSIFss` signal has sufficient setup and hold margins with respect to the rising edge of `SSIClk`.

Figure 12-12 on page 440 illustrates these setup and hold time requirements. With respect to the `SSIClk` rising edge on which the first bit of receive data is to be sampled by the SSI slave, `SSIFss` must have a setup of at least two times the period of `SSIClk` on which the SSI operates. With respect to the `SSIClk` rising edge previous to this edge, `SSIFss` must have a hold of at least one `SSIClk` period.

Figure 12-12. MICROWIRE Frame Format, SSIFss Input Setup and Hold Requirements

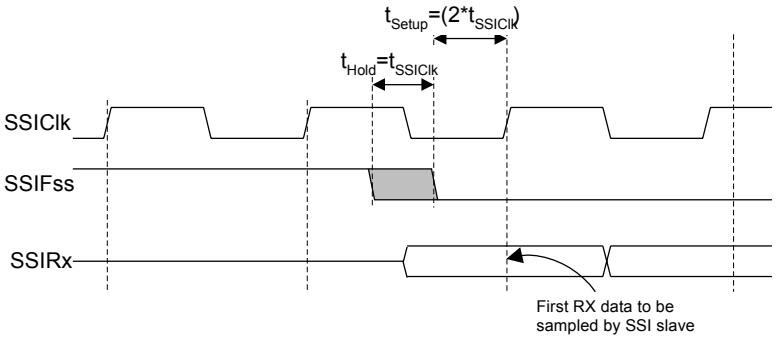

12.4 Initialization and Configuration

To use the SSI, its peripheral clock must be enabled by setting the `SSI` bit in the **RCGC1** register.

For each of the frame formats, the SSI is configured using the following steps:

1. Ensure that the `SSE` bit in the **SSICR1** register is disabled before making any configuration changes.
2. Select whether the SSI is a master or slave:
   a. For master operations, set the **SSICR1** register to 0x0000.0000.
   b. For slave mode (output enabled), set the **SSICR1** register to 0x0000.0004.
   c. For slave mode (output disabled), set the **SSICR1** register to 0x0000.000C.
3. Configure the clock prescale divisor by writing the **SSICPSR** register.
4. Write the **SSICR0** register with the following configuration:

- Serial clock rate (SCR)
- Desired clock phase/polarity, if using Freescale SPI mode (SPH and SPO)
- The protocol mode: Freescale SPI, TI SSF, MICROWIRE (FRF)
- The data size (DSS)

5. Enable the SSI by setting the SSE bit in the **SSICR1** register.

As an example, assume the SSI must be configured to operate with the following parameters:

- Master operation
- Freescale SPI mode (SPO=1, SPH=1)
- 1 Mbps bit rate
- 8 data bits

Assuming the system clock is 20 MHz, the bit rate calculation would be:

```
FSSIClk = FSysClk / (CPSDVSR * (1 + SCR))
1x106 = 20x106 / (CPSDVSR * (1 + SCR))
```

In this case, if CPSDVSR=2, SCR must be 9.

The configuration sequence would be as follows:

1. Ensure that the SSE bit in the **SSICR1** register is disabled.
2. Write the **SSICR1** register with a value of 0x0000.0000.
3. Write the **SSICPSR** register with a value of 0x0000.0002.
4. Write the **SSICR0** register with a value of 0x0000.09C7.
5. The SSI is then enabled by setting the SSE bit in the **SSICR1** register to 1.

12.5 Register Map

Table 12-3 on page 442 lists the SSI registers. The offset listed is a hexadecimal increment to the register's address, relative to that SSI module's base address:

- SSI0: 0x4000.8000
- SSI1: 0x4000.9000

Note that the SSI module clock must be enabled before the registers can be programmed (see page 212). There must be a delay of 3 system clocks after the SSI module clock is enabled before any SSI module registers are accessed.

Note: The SSI must be disabled (see the SSE bit in the **SSICR1** register) before any of the control registers are reprogrammed.

Table 12-3. SSI Register Map

Offset	Name	Type	Reset	Description	See page
0x000	SSICR0	R/W	0x0000.0000	SSI Control 0	443
0x004	SSICR1	R/W	0x0000.0000	SSI Control 1	445
0x008	SSIDR	R/W	0x0000.0000	SSI Data	447
0x00C	SSISR	RO	0x0000.0003	SSI Status	448
0x010	SSICPSR	R/W	0x0000.0000	SSI Clock Prescale	450
0x014	SSIIM	R/W	0x0000.0000	SSI Interrupt Mask	451
0x018	SSIRIS	RO	0x0000.0008	SSI Raw Interrupt Status	453
0x01C	SSIMIS	RO	0x0000.0000	SSI Masked Interrupt Status	454
0x020	SSIICR	W1C	0x0000.0000	SSI Interrupt Clear	455
0xFD0	SSIPeriphID4	RO	0x0000.0000	SSI Peripheral Identification 4	456
0xFD4	SSIPeriphID5	RO	0x0000.0000	SSI Peripheral Identification 5	457
0xFD8	SSIPeriphID6	RO	0x0000.0000	SSI Peripheral Identification 6	458
0xFDC	SSIPeriphID7	RO	0x0000.0000	SSI Peripheral Identification 7	459
0xFE0	SSIPeriphID0	RO	0x0000.0022	SSI Peripheral Identification 0	460
0xFE4	SSIPeriphID1	RO	0x0000.0000	SSI Peripheral Identification 1	461
0xFE8	SSIPeriphID2	RO	0x0000.0018	SSI Peripheral Identification 2	462
0xFEC	SSIPeriphID3	RO	0x0000.0001	SSI Peripheral Identification 3	463
0xFF0	SSIPCellID0	RO	0x0000.000D	SSI PrimeCell Identification 0	464
0xFF4	SSIPCellID1	RO	0x0000.00F0	SSI PrimeCell Identification 1	465
0xFF8	SSIPCellID2	RO	0x0000.0005	SSI PrimeCell Identification 2	466
0xFFC	SSIPCellID3	RO	0x0000.00B1	SSI PrimeCell Identification 3	467

12.6 Register Descriptions

The remainder of this section lists and describes the SSI registers, in numerical order by address offset.

Register 1: SSI Control 0 (SSICR0), offset 0x000

SSICR0 is control register 0 and contains bit fields that control various functions within the SSI module. Functionality such as protocol mode, clock rate, and data size are configured in this register.

SSI Control 0 (SSICR0)

SSI0 base: 0x4000.8000
SSI1 base: 0x4000.9000
Offset 0x000
Type R/W, reset 0x0000.0000

	31	30	29	28	27	26	25	24	23	22	21	20	19	18	17	16
	reserved															
Type	RO	RO	RO	RO	RO	RO	RO	RO	RO	RO	RO	RO	RO	RO	RO	RO
Reset	0	0	0	0	0	0	0	0	0	0	0	0	0	0	0	0

	15	14	13	12	11	10	9	8	7	6	5	4	3	2	1	0
	SCR								SPH	SPO	FRF		DSS			
Type	R/W	R/W	R/W	R/W	R/W	R/W	R/W	R/W	R/W	R/W	R/W	R/W	R/W	R/W	R/W	R/W
Reset	0	0	0	0	0	0	0	0	0	0	0	0	0	0	0	0

Bit/Field	Name	Type	Reset	Description
31:16	reserved	RO	0x00	Software should not rely on the value of a reserved bit. To provide compatibility with future products, the value of a reserved bit should be preserved across a read-modify-write operation.
15:8	SCR	R/W	0x0000	SSI Serial Clock Rate The value `SCR` is used to generate the transmit and receive bit rate of the SSI. The bit rate is: `BR=FSSIClk/(CPSDVSR * (1 + SCR))` where `CPSDVSR` is an even value from 2-254 programmed in the **SSICPSR** register, and `SCR` is a value from 0-255.
7	SPH	R/W	0	SSI Serial Clock Phase This bit is only applicable to the Freescale SPI Format. The `SPH` control bit selects the clock edge that captures data and allows it to change state. It has the most impact on the first bit transmitted by either allowing or not allowing a clock transition before the first data capture edge. When the `SPH` bit is 0, data is captured on the first clock edge transition. If `SPH` is 1, data is captured on the second clock edge transition.
6	SPO	R/W	0	SSI Serial Clock Polarity This bit is only applicable to the Freescale SPI Format. When the `SPO` bit is 0, it produces a steady state Low value on the `SSIClk` pin. If `SPO` is 1, a steady state High value is placed on the `SSIClk` pin when data is not being transferred.

Bit/Field	Name	Type	Reset	Description
5:4	FRF	R/W	0x0	SSI Frame Format Select The FRF values are defined as follows: Value Frame Format 0x0 Freescale SPI Frame Format 0x1 Texas Instruments Synchronous Serial Frame Format 0x2 MICROWIRE Frame Format 0x3 Reserved
3:0	DSS	R/W	0x00	SSI Data Size Select The DSS values are defined as follows: Value Data Size 0x0-0x2 Reserved 0x3 4-bit data 0x4 5-bit data 0x5 6-bit data 0x6 7-bit data 0x7 8-bit data 0x8 9-bit data 0x9 10-bit data 0xA 11-bit data 0xB 12-bit data 0xC 13-bit data 0xD 14-bit data 0xE 15-bit data 0xF 16-bit data

Register 2: SSI Control 1 (SSICR1), offset 0x004

SSICR1 is control register 1 and contains bit fields that control various functions within the SSI module. Master and slave mode functionality is controlled by this register.

SSI Control 1 (SSICR1)

SSI0 base: 0x4000.8000
SSI1 base: 0x4000.9000
Offset 0x004
Type R/W, reset 0x0000.0000

	31	30	29	28	27	26	25	24	23	22	21	20	19	18	17	16
	reserved															
Type	RO	RO	RO	RO	RO	RO	RO	RO	RO	RO	RO	RO	RO	RO	RO	RO
Reset	0	0	0	0	0	0	0	0	0	0	0	0	0	0	0	0

	15	14	13	12	11	10	9	8	7	6	5	4	3	2	1	0
	reserved												SOD	MS	SSE	LBM
Type	RO	RO	RO	RO	RO	RO	RO	RO	RO	RO	RO	RO	R/W	R/W	R/W	R/W
Reset	0	0	0	0	0	0	0	0	0	0	0	0	0	0	0	0

Bit/Field	Name	Type	Reset	Description
31:4	reserved	RO	0x00	Software should not rely on the value of a reserved bit. To provide compatibility with future products, the value of a reserved bit should be preserved across a read-modify-write operation.
3	SOD	R/W	0	SSI Slave Mode Output Disable This bit is relevant only in the Slave mode (`MS=1`). In multiple-slave systems, it is possible for the SSI master to broadcast a message to all slaves in the system while ensuring that only one slave drives data onto the serial output line. In such systems, the TXD lines from multiple slaves could be tied together. To operate in such a system, the `SOD` bit can be configured so that the SSI slave does not drive the `SSITx` pin. The `SOD` values are defined as follows: Value Description 0 SSI can drive `SSITx` output in Slave Output mode. 1 SSI must not drive the `SSITx` output in Slave mode.
2	MS	R/W	0	SSI Master/Slave Select This bit selects Master or Slave mode and can be modified only when SSI is disabled (`SSE=0`). The `MS` values are defined as follows: Value Description 0 Device configured as a master. 1 Device configured as a slave.

Bit/Field	Name	Type	Reset	Description
1	SSE	R/W	0	SSI Synchronous Serial Port Enable Setting this bit enables SSI operation. The SSE values are defined as follows: Value Description 0 SSI operation disabled. 1 SSI operation enabled. **Note:** This bit must be set to 0 before any control registers are reprogrammed.
0	LBM	R/W	0	SSI Loopback Mode Setting this bit enables Loopback Test mode. The LBM values are defined as follows: Value Description 0 Normal serial port operation enabled. 1 Output of the transmit serial shift register is connected internally to the input of the receive serial shift register.

Register 3: SSI Data (SSIDR), offset 0x008

Important: This register is read-sensitive. See the register description for details.

SSIDR is the data register and is 16-bits wide. When **SSIDR** is read, the entry in the receive FIFO (pointed to by the current FIFO read pointer) is accessed. As data values are removed by the SSI receive logic from the incoming data frame, they are placed into the entry in the receive FIFO (pointed to by the current FIFO write pointer).

When **SSIDR** is written to, the entry in the transmit FIFO (pointed to by the write pointer) is written to. Data values are removed from the transmit FIFO one value at a time by the transmit logic. It is loaded into the transmit serial shifter, then serially shifted out onto the `SSITx` pin at the programmed bit rate.

When a data size of less than 16 bits is selected, the user must right-justify data written to the transmit FIFO. The transmit logic ignores the unused bits. Received data less than 16 bits is automatically right-justified in the receive buffer.

When the SSI is programmed for MICROWIRE frame format, the default size for transmit data is eight bits (the most significant byte is ignored). The receive data size is controlled by the programmer. The transmit FIFO and the receive FIFO are not cleared even when the `SSE` bit in the **SSICR1** register is set to zero. This allows the software to fill the transmit FIFO before enabling the SSI.

SSI Data (SSIDR)

SSI0 base: 0x4000.8000
SSI1 base: 0x4000.9000
Offset 0x008
Type R/W, reset 0x0000.0000

	31	30	29	28	27	26	25	24	23	22	21	20	19	18	17	16
	reserved															
Type	RO	RO	RO	RO	RO	RO	RO	RO	RO	RO	RO	RO	RO	RO	RO	RO
Reset	0	0	0	0	0	0	0	0	0	0	0	0	0	0	0	0

	15	14	13	12	11	10	9	8	7	6	5	4	3	2	1	0
	DATA															
Type	R/W	R/W	R/W	R/W	R/W	R/W	R/W	R/W	R/W	R/W	R/W	R/W	R/W	R/W	R/W	R/W
Reset	0	0	0	0	0	0	0	0	0	0	0	0	0	0	0	0

Bit/Field	Name	Type	Reset	Description
31:16	reserved	RO	0x0000	Software should not rely on the value of a reserved bit. To provide compatibility with future products, the value of a reserved bit should be preserved across a read-modify-write operation.
15:0	DATA	R/W	0x0000	SSI Receive/Transmit Data A read operation reads the receive FIFO. A write operation writes the transmit FIFO. Software must right-justify data when the SSI is programmed for a data size that is less than 16 bits. Unused bits at the top are ignored by the transmit logic. The receive logic automatically right-justifies the data.

Register 4: SSI Status (SSISR), offset 0x00C

SSISR is a status register that contains bits that indicate the FIFO fill status and the SSI busy status.

SSI Status (SSISR)

SSI0 base: 0x4000.8000
SSI1 base: 0x4000.9000
Offset 0x00C
Type RO, reset 0x0000.0003

	31	30	29	28	27	26	25	24	23	22	21	20	19	18	17	16
	reserved															
Type	RO	RO	RO	RO	RO	RO	RO	RO	RO	RO	RO	RO	RO	RO	RO	RO
Reset	0	0	0	0	0	0	0	0	0	0	0	0	0	0	0	0

	15	14	13	12	11	10	9	8	7	6	5	4	3	2	1	0
	reserved											BSY	RFF	RNE	TNF	TFE
Type	RO	RO	RO	RO	RO	RO	RO	RO	RO	RO	RO	RO	RO	RO	RO	R0
Reset	0	0	0	0	0	0	0	0	0	0	0	0	0	0	1	1

Bit/Field	Name	Type	Reset	Description
31:5	reserved	RO	0x00	Software should not rely on the value of a reserved bit. To provide compatibility with future products, the value of a reserved bit should be preserved across a read-modify-write operation.
4	BSY	RO	0	SSI Busy Bit The BSY values are defined as follows: Value Description 0 SSI is idle. 1 SSI is currently transmitting and/or receiving a frame, or the transmit FIFO is not empty.
3	RFF	RO	0	SSI Receive FIFO Full The RFF values are defined as follows: Value Description 0 Receive FIFO is not full. 1 Receive FIFO is full.
2	RNE	RO	0	SSI Receive FIFO Not Empty The RNE values are defined as follows: Value Description 0 Receive FIFO is empty. 1 Receive FIFO is not empty.
1	TNF	RO	1	SSI Transmit FIFO Not Full The TNF values are defined as follows: Value Description 0 Transmit FIFO is full. 1 Transmit FIFO is not full.

Bit/Field	Name	Type	Reset	Description
0	TFE	R0	1	SSI Transmit FIFO Empty The TFE values are defined as follows: Value Description 0 Transmit FIFO is not empty. 1 Transmit FIFO is empty.

Register 5: SSI Clock Prescale (SSICPSR), offset 0x010

SSICPSR is the clock prescale register and specifies the division factor by which the system clock must be internally divided before further use.

The value programmed into this register must be an even number between 2 and 254. The least-significant bit of the programmed number is hard-coded to zero. If an odd number is written to this register, data read back from this register has the least-significant bit as zero.

SSI Clock Prescale (SSICPSR)

SSI0 base: 0x4000.8000
SSI1 base: 0x4000.9000
Offset 0x010
Type R/W, reset 0x0000.0000

	31	30	29	28	27	26	25	24	23	22	21	20	19	18	17	16
	reserved															
Type	RO	RO	RO	RO	RO	RO	RO	RO	RO	RO	RO	RO	RO	RO	RO	RO
Reset	0	0	0	0	0	0	0	0	0	0	0	0	0	0	0	0

	15	14	13	12	11	10	9	8	7	6	5	4	3	2	1	0
	reserved								CPSDVSR							
Type	RO	RO	RO	RO	RO	RO	RO	RO	R/W	R/W	R/W	R/W	R/W	R/W	R/W	R/W
Reset	0	0	0	0	0	0	0	0	0	0	0	0	0	0	0	0

Bit/Field	Name	Type	Reset	Description
31:8	reserved	RO	0x00	Software should not rely on the value of a reserved bit. To provide compatibility with future products, the value of a reserved bit should be preserved across a read-modify-write operation.
7:0	CPSDVSR	R/W	0x00	SSI Clock Prescale Divisor This value must be an even number from 2 to 254, depending on the frequency of `SSIClk`. The LSB always returns 0 on reads.

Register 6: SSI Interrupt Mask (SSIIM), offset 0x014

The **SSIIM** register is the interrupt mask set or clear register. It is a read/write register and all bits are cleared to 0 on reset.

On a read, this register gives the current value of the mask on the relevant interrupt. A write of 1 to the particular bit sets the mask, enabling the interrupt to be read. A write of 0 clears the corresponding mask.

SSI Interrupt Mask (SSIIM)

SSI0 base: 0x4000.8000
SSI1 base: 0x4000.9000
Offset 0x014
Type R/W, reset 0x0000.0000

	31	30	29	28	27	26	25	24	23	22	21	20	19	18	17	16
	reserved															
Type	RO	RO	RO	RO	RO	RO	RO	RO	RO	RO	RO	RO	RO	RO	RO	RO
Reset	0	0	0	0	0	0	0	0	0	0	0	0	0	0	0	0

	15	14	13	12	11	10	9	8	7	6	5	4	3	2	1	0
	reserved												TXIM	RXIM	RTIM	RORIM
Type	RO	RO	RO	RO	RO	RO	RO	RO	RO	RO	RO	RO	R/W	R/W	R/W	R/W
Reset	0	0	0	0	0	0	0	0	0	0	0	0	0	0	0	0

Bit/Field	Name	Type	Reset	Description
31:4	reserved	RO	0x00	Software should not rely on the value of a reserved bit. To provide compatibility with future products, the value of a reserved bit should be preserved across a read-modify-write operation.
3	TXIM	R/W	0	SSI Transmit FIFO Interrupt Mask The `TXIM` values are defined as follows: Value Description 0 TX FIFO half-empty or less condition interrupt is masked. 1 TX FIFO half-empty or less condition interrupt is not masked.
2	RXIM	R/W	0	SSI Receive FIFO Interrupt Mask The `RXIM` values are defined as follows: Value Description 0 RX FIFO half-full or more condition interrupt is masked. 1 RX FIFO half-full or more condition interrupt is not masked.
1	RTIM	R/W	0	SSI Receive Time-Out Interrupt Mask The `RTIM` values are defined as follows: Value Description 0 RX FIFO time-out interrupt is masked. 1 RX FIFO time-out interrupt is not masked.

Bit/Field	Name	Type	Reset	Description
0	RORIM	R/W	0	SSI Receive Overrun Interrupt Mask The `RORIM` values are defined as follows: Value Description 0 RX FIFO overrun interrupt is masked. 1 RX FIFO overrun interrupt is not masked.

Register 7: SSI Raw Interrupt Status (SSIRIS), offset 0x018

The **SSIRIS** register is the raw interrupt status register. On a read, this register gives the current raw status value of the corresponding interrupt prior to masking. A write has no effect.

SSI Raw Interrupt Status (SSIRIS)

SSI0 base: 0x4000.8000
SSI1 base: 0x4000.9000
Offset 0x018
Type RO, reset 0x0000.0008

	31	30	29	28	27	26	25	24	23	22	21	20	19	18	17	16
	reserved															
Type	RO	RO	RO	RO	RO	RO	RO	RO	RO	RO	RO	RO	RO	RO	RO	RO
Reset	0	0	0	0	0	0	0	0	0	0	0	0	0	0	0	0

	15	14	13	12	11	10	9	8	7	6	5	4	3	2	1	0
	reserved												TXRIS	RXRIS	RTRIS	RORRIS
Type	RO	RO	RO	RO	RO	RO	RO	RO	RO	RO	RO	RO	RO	RO	RO	RO
Reset	0	0	0	0	0	0	0	0	0	0	0	0	1	0	0	0

Bit/Field	Name	Type	Reset	Description
31:4	reserved	RO	0x00	Software should not rely on the value of a reserved bit. To provide compatibility with future products, the value of a reserved bit should be preserved across a read-modify-write operation.
3	TXRIS	RO	1	SSI Transmit FIFO Raw Interrupt Status Indicates that the transmit FIFO is half empty or less, when set.
2	RXRIS	RO	0	SSI Receive FIFO Raw Interrupt Status Indicates that the receive FIFO is half full or more, when set.
1	RTRIS	RO	0	SSI Receive Time-Out Raw Interrupt Status Indicates that the receive time-out has occurred, when set.
0	RORRIS	RO	0	SSI Receive Overrun Raw Interrupt Status Indicates that the receive FIFO has overflowed, when set.

Register 8: SSI Masked Interrupt Status (SSIMIS), offset 0x01C

The **SSIMIS** register is the masked interrupt status register. On a read, this register gives the current masked status value of the corresponding interrupt. A write has no effect.

SSI Masked Interrupt Status (SSIMIS)

SSI0 base: 0x4000.8000
SSI1 base: 0x4000.9000
Offset 0x01C
Type RO, reset 0x0000.0000

	31	30	29	28	27	26	25	24	23	22	21	20	19	18	17	16
	reserved															
Type	RO	RO	RO	RO	RO	RO	RO	RO	RO	RO	RO	RO	RO	RO	RO	RO
Reset	0	0	0	0	0	0	0	0	0	0	0	0	0	0	0	0

	15	14	13	12	11	10	9	8	7	6	5	4	3	2	1	0
	reserved												TXMIS	RXMIS	RTMIS	RORMIS
Type	RO	RO	RO	RO	RO	RO	RO	RO	RO	RO	RO	RO	RO	RO	RO	RO
Reset	0	0	0	0	0	0	0	0	0	0	0	0	0	0	0	0

Bit/Field	Name	Type	Reset	Description
31:4	reserved	RO	0	Software should not rely on the value of a reserved bit. To provide compatibility with future products, the value of a reserved bit should be preserved across a read-modify-write operation.
3	TXMIS	RO	0	SSI Transmit FIFO Masked Interrupt Status Indicates that the transmit FIFO is half empty or less, when set.
2	RXMIS	RO	0	SSI Receive FIFO Masked Interrupt Status Indicates that the receive FIFO is half full or more, when set.
1	RTMIS	RO	0	SSI Receive Time-Out Masked Interrupt Status Indicates that the receive time-out has occurred, when set.
0	RORMIS	RO	0	SSI Receive Overrun Masked Interrupt Status Indicates that the receive FIFO has overflowed, when set.

Register 9: SSI Interrupt Clear (SSIICR), offset 0x020

The **SSIICR** register is the interrupt clear register. On a write of 1, the corresponding interrupt is cleared. A write of 0 has no effect.

SSI Interrupt Clear (SSIICR)

SSI0 base: 0x4000.8000
SSI1 base: 0x4000.9000
Offset 0x020
Type W1C, reset 0x0000.0000

	31	30	29	28	27	26	25	24	23	22	21	20	19	18	17	16
	reserved															
Type	RO	RO	RO	RO	RO	RO	RO	RO	RO	RO	RO	RO	RO	RO	RO	RO
Reset	0	0	0	0	0	0	0	0	0	0	0	0	0	0	0	0

	15	14	13	12	11	10	9	8	7	6	5	4	3	2	1	0
	reserved														RTIC	RORIC
Type	RO	RO	RO	RO	RO	RO	RO	RO	RO	RO	RO	RO	RO	RO	W1C	W1C
Reset	0	0	0	0	0	0	0	0	0	0	0	0	0	0	0	0

Bit/Field	Name	Type	Reset	Description
31:2	reserved	RO	0x00	Software should not rely on the value of a reserved bit. To provide compatibility with future products, the value of a reserved bit should be preserved across a read-modify-write operation.
1	RTIC	W1C	0	SSI Receive Time-Out Interrupt Clear The `RTIC` values are defined as follows: Value Description 0 No effect on interrupt. 1 Clears interrupt.
0	RORIC	W1C	0	SSI Receive Overrun Interrupt Clear The `RORIC` values are defined as follows: Value Description 0 No effect on interrupt. 1 Clears interrupt.

Register 10: SSI Peripheral Identification 4 (SSIPeriphID4), offset 0xFD0

The **SSIPeriphIDn** registers are hard-coded and the fields within the register determine the reset value.

SSI Peripheral Identification 4 (SSIPeriphID4)

SSI0 base: 0x4000.8000
SSI1 base: 0x4000.9000
Offset 0xFD0
Type RO, reset 0x0000.0000

	31	30	29	28	27	26	25	24	23	22	21	20	19	18	17	16
	reserved															
Type	RO	RO	RO	RO	RO	RO	RO	RO	RO	RO	RO	RO	RO	RO	RO	RO
Reset	0	0	0	0	0	0	0	0	0	0	0	0	0	0	0	0

	15	14	13	12	11	10	9	8	7	6	5	4	3	2	1	0
	reserved								PID4							
Type	RO	RO	RO	RO	RO	RO	RO	RO	RO	RO	RO	RO	RO	RO	RO	RO
Reset	0	0	0	0	0	0	0	0	0	0	0	0	0	0	0	0

Bit/Field	Name	Type	Reset	Description
31:8	reserved	RO	0x00	Software should not rely on the value of a reserved bit. To provide compatibility with future products, the value of a reserved bit should be preserved across a read-modify-write operation.
7:0	PID4	RO	0x00	SSI Peripheral ID Register[7:0] Can be used by software to identify the presence of this peripheral.

Register 11: SSI Peripheral Identification 5 (SSIPeriphID5), offset 0xFD4

The **SSIPeriphIDn** registers are hard-coded and the fields within the register determine the reset value.

SSI Peripheral Identification 5 (SSIPeriphID5)

SSI0 base: 0x4000.8000
SSI1 base: 0x4000.9000
Offset 0xFD4
Type RO, reset 0x0000.0000

	31	30	29	28	27	26	25	24	23	22	21	20	19	18	17	16
	reserved															
Type	RO	RO	RO	RO	RO	RO	RO	RO	RO	RO	RO	RO	RO	RO	RO	RO
Reset	0	0	0	0	0	0	0	0	0	0	0	0	0	0	0	0

	15	14	13	12	11	10	9	8	7	6	5	4	3	2	1	0
	reserved								PID5							
Type	RO	RO	RO	RO	RO	RO	RO	RO	RO	RO	RO	RO	RO	RO	RO	RO
Reset	0	0	0	0	0	0	0	0	0	0	0	0	0	0	0	0

Bit/Field	Name	Type	Reset	Description
31:8	reserved	RO	0x00	Software should not rely on the value of a reserved bit. To provide compatibility with future products, the value of a reserved bit should be preserved across a read-modify-write operation.
7:0	PID5	RO	0x00	SSI Peripheral ID Register[15:8] Can be used by software to identify the presence of this peripheral.

Register 12: SSI Peripheral Identification 6 (SSIPeriphID6), offset 0xFD8

The **SSIPeriphIDn** registers are hard-coded and the fields within the register determine the reset value.

SSI Peripheral Identification 6 (SSIPeriphID6)

SSI0 base: 0x4000.8000
SSI1 base: 0x4000.9000
Offset 0xFD8
Type RO, reset 0x0000.0000

	31	30	29	28	27	26	25	24	23	22	21	20	19	18	17	16
	reserved															
Type	RO	RO	RO	RO	RO	RO	RO	RO	RO	RO	RO	RO	RO	RO	RO	RO
Reset	0	0	0	0	0	0	0	0	0	0	0	0	0	0	0	0

	15	14	13	12	11	10	9	8	7	6	5	4	3	2	1	0
	reserved								PID6							
Type	RO	RO	RO	RO	RO	RO	RO	RO	RO	RO	RO	RO	RO	RO	RO	RO
Reset	0	0	0	0	0	0	0	0	0	0	0	0	0	0	0	0

Bit/Field	Name	Type	Reset	Description
31:8	reserved	RO	0x00	Software should not rely on the value of a reserved bit. To provide compatibility with future products, the value of a reserved bit should be preserved across a read-modify-write operation.
7:0	PID6	RO	0x00	SSI Peripheral ID Register[23:16] Can be used by software to identify the presence of this peripheral.

Register 13: SSI Peripheral Identification 7 (SSIPeriphID7), offset 0xFDC

The **SSIPeriphIDn** registers are hard-coded and the fields within the register determine the reset value.

SSI Peripheral Identification 7 (SSIPeriphID7)

SSI0 base: 0x4000.8000
SSI1 base: 0x4000.9000
Offset 0xFDC
Type RO, reset 0x0000.0000

	31	30	29	28	27	26	25	24	23	22	21	20	19	18	17	16
	reserved															
Type	RO	RO	RO	RO	RO	RO	RO	RO	RO	RO	RO	RO	RO	RO	RO	RO
Reset	0	0	0	0	0	0	0	0	0	0	0	0	0	0	0	0

	15	14	13	12	11	10	9	8	7	6	5	4	3	2	1	0
	reserved								PID7							
Type	RO	RO	RO	RO	RO	RO	RO	RO	RO	RO	RO	RO	RO	RO	RO	RO
Reset	0	0	0	0	0	0	0	0	0	0	0	0	0	0	0	0

Bit/Field	Name	Type	Reset	Description
31:8	reserved	RO	0x00	Software should not rely on the value of a reserved bit. To provide compatibility with future products, the value of a reserved bit should be preserved across a read-modify-write operation.
7:0	PID7	RO	0x00	SSI Peripheral ID Register[31:24] Can be used by software to identify the presence of this peripheral.

Register 14: SSI Peripheral Identification 0 (SSIPeriphID0), offset 0xFE0

The **SSIPeriphIDn** registers are hard-coded and the fields within the register determine the reset value.

SSI Peripheral Identification 0 (SSIPeriphID0)

SSI0 base: 0x4000.8000
SSI1 base: 0x4000.9000
Offset 0xFE0
Type RO, reset 0x0000.0022

	31	30	29	28	27	26	25	24	23	22	21	20	19	18	17	16
	reserved															
Type	RO	RO	RO	RO	RO	RO	RO	RO	RO	RO	RO	RO	RO	RO	RO	RO
Reset	0	0	0	0	0	0	0	0	0	0	0	0	0	0	0	0

	15	14	13	12	11	10	9	8	7	6	5	4	3	2	1	0
	reserved								PID0							
Type	RO	RO	RO	RO	RO	RO	RO	RO	RO	RO	RO	RO	RO	RO	RO	RO
Reset	0	0	0	0	0	0	0	0	0	0	1	0	0	0	1	0

Bit/Field	Name	Type	Reset	Description
31:8	reserved	RO	0	Software should not rely on the value of a reserved bit. To provide compatibility with future products, the value of a reserved bit should be preserved across a read-modify-write operation.
7:0	PID0	RO	0x22	SSI Peripheral ID Register[7:0] Can be used by software to identify the presence of this peripheral.

Register 15: SSI Peripheral Identification 1 (SSIPeriphID1), offset 0xFE4

The **SSIPeriphIDn** registers are hard-coded and the fields within the register determine the reset value.

SSI Peripheral Identification 1 (SSIPeriphID1)

SSI0 base: 0x4000.8000
SSI1 base: 0x4000.9000
Offset 0xFE4
Type RO, reset 0x0000.0000

	31	30	29	28	27	26	25	24	23	22	21	20	19	18	17	16
	reserved															
Type	RO	RO	RO	RO	RO	RO	RO	RO	RO	RO	RO	RO	RO	RO	RO	RO
Reset	0	0	0	0	0	0	0	0	0	0	0	0	0	0	0	0

	15	14	13	12	11	10	9	8	7	6	5	4	3	2	1	0
	reserved								PID1							
Type	RO	RO	RO	RO	RO	RO	RO	RO	RO	RO	RO	RO	RO	RO	RO	RO
Reset	0	0	0	0	0	0	0	0	0	0	0	0	0	0	0	0

Bit/Field	Name	Type	Reset	Description
31:8	reserved	RO	0x00	Software should not rely on the value of a reserved bit. To provide compatibility with future products, the value of a reserved bit should be preserved across a read-modify-write operation.
7:0	PID1	RO	0x00	SSI Peripheral ID Register [15:8] Can be used by software to identify the presence of this peripheral.

Register 16: SSI Peripheral Identification 2 (SSIPeriphID2), offset 0xFE8

The **SSIPeriphIDn** registers are hard-coded and the fields within the register determine the reset value.

SSI Peripheral Identification 2 (SSIPeriphID2)

SSI0 base: 0x4000.8000
SSI1 base: 0x4000.9000
Offset 0xFE8
Type RO, reset 0x0000.0018

	31	30	29	28	27	26	25	24	23	22	21	20	19	18	17	16
	reserved															
Type	RO	RO	RO	RO	RO	RO	RO	RO	RO	RO	RO	RO	RO	RO	RO	RO
Reset	0	0	0	0	0	0	0	0	0	0	0	0	0	0	0	0

	15	14	13	12	11	10	9	8	7	6	5	4	3	2	1	0
	reserved								PID2							
Type	RO	RO	RO	RO	RO	RO	RO	RO	RO	RO	RO	RO	RO	RO	RO	RO
Reset	0	0	0	0	0	0	0	0	0	0	0	1	1	0	0	0

Bit/Field	Name	Type	Reset	Description
31:8	reserved	RO	0x00	Software should not rely on the value of a reserved bit. To provide compatibility with future products, the value of a reserved bit should be preserved across a read-modify-write operation.
7:0	PID2	RO	0x18	SSI Peripheral ID Register [23:16] Can be used by software to identify the presence of this peripheral.

Register 17: SSI Peripheral Identification 3 (SSIPeriphID3), offset 0xFEC

The **SSIPeriphIDn** registers are hard-coded and the fields within the register determine the reset value.

SSI Peripheral Identification 3 (SSIPeriphID3)

SSI0 base: 0x4000.8000
SSI1 base: 0x4000.9000
Offset 0xFEC
Type RO, reset 0x0000.0001

	31	30	29	28	27	26	25	24	23	22	21	20	19	18	17	16
	reserved															
Type	RO	RO	RO	RO	RO	RO	RO	RO	RO	RO	RO	RO	RO	RO	RO	RO
Reset	0	0	0	0	0	0	0	0	0	0	0	0	0	0	0	0

	15	14	13	12	11	10	9	8	7	6	5	4	3	2	1	0
	reserved								PID3							
Type	RO	RO	RO	RO	RO	RO	RO	RO	RO	RO	RO	RO	RO	RO	RO	RO
Reset	0	0	0	0	0	0	0	0	0	0	0	0	0	0	0	1

Bit/Field	Name	Type	Reset	Description
31:8	reserved	RO	0x00	Software should not rely on the value of a reserved bit. To provide compatibility with future products, the value of a reserved bit should be preserved across a read-modify-write operation.
7:0	PID3	RO	0x01	SSI Peripheral ID Register [31:24] Can be used by software to identify the presence of this peripheral.

Register 18: SSI PrimeCell Identification 0 (SSIPCellID0), offset 0xFF0

The **SSIPCellIDn** registers are hard-coded, and the fields within the register determine the reset value.

SSI PrimeCell Identification 0 (SSIPCellID0)

SSI0 base: 0x4000.8000
SSI1 base: 0x4000.9000
Offset 0xFF0
Type RO, reset 0x0000.000D

	31	30	29	28	27	26	25	24	23	22	21	20	19	18	17	16
	reserved															
Type	RO	RO	RO	RO	RO	RO	RO	RO	RO	RO	RO	RO	RO	RO	RO	RO
Reset	0	0	0	0	0	0	0	0	0	0	0	0	0	0	0	0

	15	14	13	12	11	10	9	8	7	6	5	4	3	2	1	0
	reserved								CID0							
Type	RO	RO	RO	RO	RO	RO	RO	RO	RO	RO	RO	RO	RO	RO	RO	RO
Reset	0	0	0	0	0	0	0	0	0	0	0	0	1	1	0	1

Bit/Field	Name	Type	Reset	Description
31:8	reserved	RO	0x00	Software should not rely on the value of a reserved bit. To provide compatibility with future products, the value of a reserved bit should be preserved across a read-modify-write operation.
7:0	CID0	RO	0x0D	SSI PrimeCell ID Register [7:0] Provides software a standard cross-peripheral identification system.

Register 19: SSI PrimeCell Identification 1 (SSIPCellID1), offset 0xFF4

The **SSIPCellIDn** registers are hard-coded, and the fields within the register determine the reset value.

SSI PrimeCell Identification 1 (SSIPCellID1)

SSI0 base: 0x4000.8000
SSI1 base: 0x4000.9000
Offset 0xFF4
Type RO, reset 0x0000.00F0

	31	30	29	28	27	26	25	24	23	22	21	20	19	18	17	16
	reserved															
Type	RO	RO	RO	RO	RO	RO	RO	RO	RO	RO	RO	RO	RO	RO	RO	RO
Reset	0	0	0	0	0	0	0	0	0	0	0	0	0	0	0	0

	15	14	13	12	11	10	9	8	7	6	5	4	3	2	1	0
	reserved								CID1							
Type	RO	RO	RO	RO	RO	RO	RO	RO	RO	RO	RO	RO	RO	RO	RO	RO
Reset	0	0	0	0	0	0	0	0	1	1	1	1	0	0	0	0

Bit/Field	Name	Type	Reset	Description
31:8	reserved	RO	0x00	Software should not rely on the value of a reserved bit. To provide compatibility with future products, the value of a reserved bit should be preserved across a read-modify-write operation.
7:0	CID1	RO	0xF0	SSI PrimeCell ID Register [15:8] Provides software a standard cross-peripheral identification system.

Register 20: SSI PrimeCell Identification 2 (SSIPCellID2), offset 0xFF8

The **SSIPCellIDn** registers are hard-coded, and the fields within the register determine the reset value.

SSI PrimeCell Identification 2 (SSIPCellID2)

SSI0 base: 0x4000.8000
SSI1 base: 0x4000.9000
Offset 0xFF8
Type RO, reset 0x0000.0005

	31	30	29	28	27	26	25	24	23	22	21	20	19	18	17	16
	reserved															
Type	RO	RO	RO	RO	RO	RO	RO	RO	RO	RO	RO	RO	RO	RO	RO	RO
Reset	0	0	0	0	0	0	0	0	0	0	0	0	0	0	0	0

	15	14	13	12	11	10	9	8	7	6	5	4	3	2	1	0
	reserved								CID2							
Type	RO	RO	RO	RO	RO	RO	RO	RO	RO	RO	RO	RO	RO	RO	RO	RO
Reset	0	0	0	0	0	0	0	0	0	0	0	0	0	1	0	1

Bit/Field	Name	Type	Reset	Description
31:8	reserved	RO	0x00	Software should not rely on the value of a reserved bit. To provide compatibility with future products, the value of a reserved bit should be preserved across a read-modify-write operation.
7:0	CID2	RO	0x05	SSI PrimeCell ID Register [23:16] Provides software a standard cross-peripheral identification system.

Register 21: SSI PrimeCell Identification 3 (SSIPCellID3), offset 0xFFC

The **SSIPCellIDn** registers are hard-coded, and the fields within the register determine the reset value.

SSI PrimeCell Identification 3 (SSIPCellID3)

SSI0 base: 0x4000.8000
SSI1 base: 0x4000.9000
Offset 0xFFC
Type RO, reset 0x0000.00B1

	31	30	29	28	27	26	25	24	23	22	21	20	19	18	17	16
	reserved															
Type	RO	RO	RO	RO	RO	RO	RO	RO	RO	RO	RO	RO	RO	RO	RO	RO
Reset	0	0	0	0	0	0	0	0	0	0	0	0	0	0	0	0

	15	14	13	12	11	10	9	8	7	6	5	4	3	2	1	0
	reserved								CID3							
Type	RO	RO	RO	RO	RO	RO	RO	RO	RO	RO	RO	RO	RO	RO	RO	RO
Reset	0	0	0	0	0	0	0	0	1	0	1	1	0	0	0	1

Bit/Field	Name	Type	Reset	Description
31:8	reserved	RO	0x00	Software should not rely on the value of a reserved bit. To provide compatibility with future products, the value of a reserved bit should be preserved across a read-modify-write operation.
7:0	CID3	RO	0xB1	SSI PrimeCell ID Register [31:24] Provides software a standard cross-peripheral identification system.

13 Inter-Integrated Circuit (I^2C) Interface

The Inter-Integrated Circuit (I^2C) bus provides bi-directional data transfer through a two-wire design (a serial data line SDA and a serial clock line SCL), and interfaces to external I^2C devices such as serial memory (RAMs and ROMs), networking devices, LCDs, tone generators, and so on. The I^2C bus may also be used for system testing and diagnostic purposes in product development and manufacture. The LM3S2911 microcontroller includes two I^2C modules, providing the ability to interact (both send and receive) with other I^2C devices on the bus.

The Stellaris® I^2C interface has the following features:

- Two I^2C modules, each with the following features:
- Devices on the I^2C bus can be designated as either a master or a slave
  - Supports both sending and receiving data as either a master or a slave
  - Supports simultaneous master and slave operation
- Four I^2C modes
  - Master transmit
  - Master receive
  - Slave transmit
  - Slave receive
- Two transmission speeds: Standard (100 Kbps) and Fast (400 Kbps)
- Master and slave interrupt generation
  - Master generates interrupts when a transmit or receive operation completes (or aborts due to an error)
  - Slave generates interrupts when data has been sent or requested by a master
- Master with arbitration and clock synchronization, multimaster support, and 7-bit addressing mode

13.1 Block Diagram

Figure 13-1. I²C Block Diagram

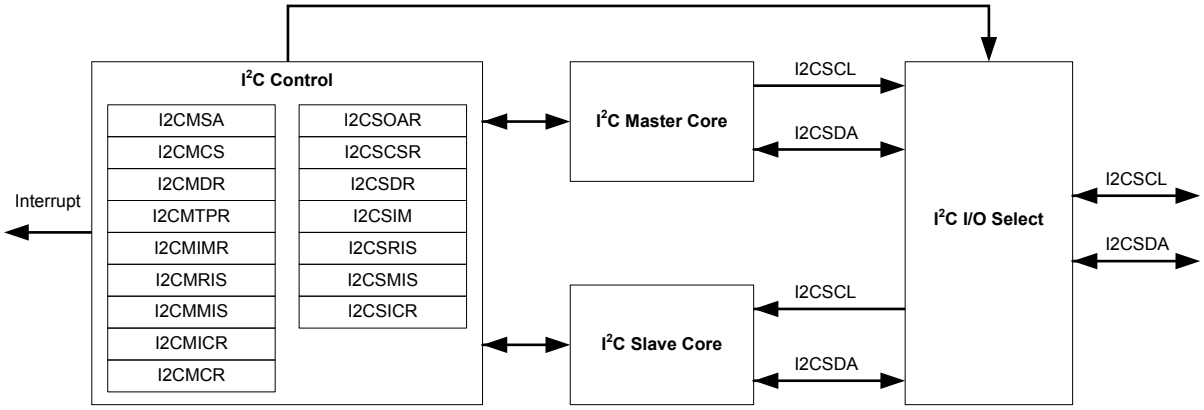

13.2 Signal Description

Table 13-1 on page 469 and Table 13-2 on page 469 list the external signals of the I²C interface and describe the function of each. The I²C interface signals are alternate functions for some GPIO signals and default to be GPIO signals at reset., with the exception of the `I2C0SCL` and `I2CSDA` pins which default to the I²C function. The column in the table below titled "Pin Assignment" lists the possible GPIO pin placements for the I²C signals. The `AFSEL` bit in the **GPIO Alternate Function Select (GPIOAFSEL)** register (page 301) should be set to choose the I²C function. Note that the I²C pins should be set to open drain using the **GPIO Open Drain Select (GPIOODR)** register. For more information on configuring GPIOs, see “General-Purpose Input/Outputs (GPIOs)” on page 278.

Table 13-1. I2C Signals (100LQFP)

Pin Name	Pin Number	Pin Type	Buffer Type[a]	Description
`I2C0SCL`	70	I/O	OD	I²C module 0 clock.
`I2C0SDA`	71	I/O	OD	I²C module 0 data.
`I2C1SCL`	34	I/O	OD	I²C module 1 clock.
`I2C1SDA`	35	I/O	OD	I²C module 1 data.

a. The TTL designation indicates the pin has TTL-compatible voltage levels.

Table 13-2. I2C Signals (108BGA)

Pin Name	Pin Number	Pin Type	Buffer Type[a]	Description
`I2C0SCL`	C11	I/O	OD	I²C module 0 clock.
`I2C0SDA`	C12	I/O	OD	I²C module 0 data.
`I2C1SCL`	L6	I/O	OD	I²C module 1 clock.
`I2C1SDA`	M6	I/O	OD	I²C module 1 data.

a. The TTL designation indicates the pin has TTL-compatible voltage levels.

13.3 Functional Description

Each I2C module is comprised of both master and slave functions which are implemented as separate peripherals. For proper operation, the SDA and SCL pins must be connected to bi-directional open-drain pads. A typical I2C bus configuration is shown in Figure 13-2 on page 470.

See "Inter-Integrated Circuit (I2C) Interface" on page 605 for I2C timing diagrams.

Figure 13-2. I2C Bus Configuration

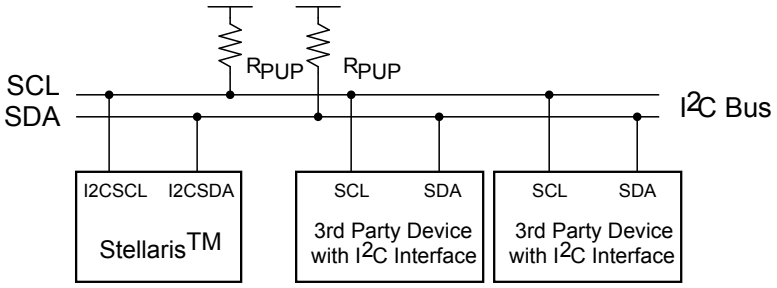

13.3.1 I2C Bus Functional Overview

The I2C bus uses only two signals: SDA and SCL, named `I2CSDA` and `I2CSCL` on Stellaris microcontrollers. SDA is the bi-directional serial data line and SCL is the bi-directional serial clock line. The bus is considered idle when both lines are High.

Every transaction on the I2C bus is nine bits long, consisting of eight data bits and a single acknowledge bit. The number of bytes per transfer (defined as the time between a valid START and STOP condition, described in "START and STOP Conditions" on page 470) is unrestricted, but each byte has to be followed by an acknowledge bit, and data must be transferred MSB first. When a receiver cannot receive another complete byte, it can hold the clock line SCL Low and force the transmitter into a wait state. The data transfer continues when the receiver releases the clock SCL.

13.3.1.1 START and STOP Conditions

The protocol of the I2C bus defines two states to begin and end a transaction: START and STOP. A High-to-Low transition on the SDA line while the SCL is High is defined as a START condition, and a Low-to-High transition on the SDA line while SCL is High is defined as a STOP condition. The bus is considered busy after a START condition and free after a STOP condition. See Figure 13-3 on page 470.

Figure 13-3. START and STOP Conditions

13.3.1.2 Data Format with 7-Bit Address

Data transfers follow the format shown in Figure 13-4 on page 471. After the START condition, a slave address is sent. This address is 7-bits long followed by an eighth bit, which is a data direction bit (`R/S` bit in the **I2CMSA** register). A zero indicates a transmit operation (send), and a one indicates

a request for data (receive). A data transfer is always terminated by a STOP condition generated by the master, however, a master can initiate communications with another device on the bus by generating a repeated START condition and addressing another slave without first generating a STOP condition. Various combinations of receive/send formats are then possible within a single transfer.

Figure 13-4. Complete Data Transfer with a 7-Bit Address

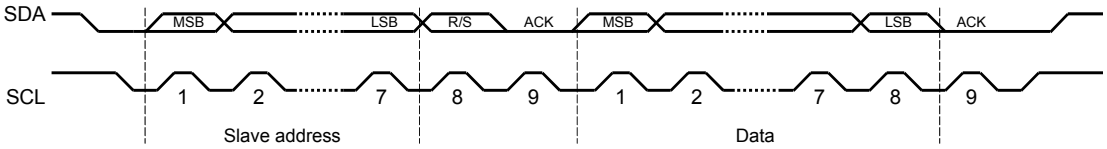

The first seven bits of the first byte make up the slave address (see Figure 13-5 on page 471). The eighth bit determines the direction of the message. A zero in the R/S position of the first byte means that the master will write (send) data to the selected slave, and a one in this position means that the master will receive data from the slave.

Figure 13-5. R/S Bit in First Byte

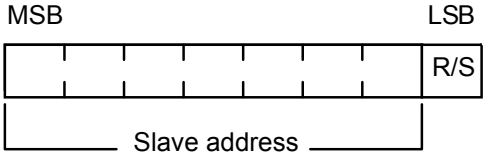

13.3.1.3 Data Validity

The data on the SDA line must be stable during the high period of the clock, and the data line can only change when SCL is Low (see Figure 13-6 on page 471).

Figure 13-6. Data Validity During Bit Transfer on the I^{2}C Bus

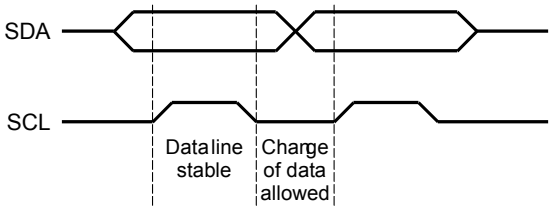

13.3.1.4 Acknowledge

All bus transactions have a required acknowledge clock cycle that is generated by the master. During the acknowledge cycle, the transmitter (which can be the master or slave) releases the SDA line. To acknowledge the transaction, the receiver must pull down SDA during the acknowledge clock cycle. The data sent out by the receiver during the acknowledge cycle must comply with the data validity requirements described in “Data Validity” on page 471.

When a slave receiver does not acknowledge the slave address, SDA must be left High by the slave so that the master can generate a STOP condition and abort the current transfer. If the master device is acting as a receiver during a transfer, it is responsible for acknowledging each transfer made by the slave. Since the master controls the number of bytes in the transfer, it signals the end of data to the slave transmitter by not generating an acknowledge on the last data byte. The slave

transmitter must then release SDA to allow the master to generate the STOP or a repeated START condition.

13.3.1.5 Arbitration

A master may start a transfer only if the bus is idle. It's possible for two or more masters to generate a START condition within minimum hold time of the START condition. In these situations, an arbitration scheme takes place on the SDA line, while SCL is High. During arbitration, the first of the competing master devices to place a '1' (High) on SDA while another master transmits a '0' (Low) will switch off its data output stage and retire until the bus is idle again.

Arbitration can take place over several bits. Its first stage is a comparison of address bits, and if both masters are trying to address the same device, arbitration continues on to the comparison of data bits.

13.3.2 Available Speed Modes

The I^{2}C clock rate is determined by the parameters: `CLK_PRD`, `TIMER_PRD`, `SCL_LP`, and `SCL_HP`.

where:

`CLK_PRD` is the system clock period

`SCL_LP` is the low phase of SCL (fixed at 6)

`SCL_HP` is the high phase of SCL (fixed at 4)

`TIMER_PRD` is the programmed value in the **I^{2}C Master Timer Period (I2CMTPR)** register (see page 490).

The I^{2}C clock period is calculated as follows:

```
SCL_PERIOD = 2*(1 + TIMER_PRD)*(SCL_LP + SCL_HP)*CLK_PRD
```

For example:

```
CLK_PRD = 50 ns
TIMER_PRD = 2
SCL_LP=6
SCL_HP=4
```

yields a SCL frequency of:

```
1/T = 333 Khz
```

Table 13-3 on page 472 gives examples of timer period, system clock, and speed mode (Standard or Fast).

Table 13-3. Examples of I^{2}C Master Timer Period versus Speed Mode

System Clock	Timer Period	Standard Mode	Timer Period	Fast Mode
4 MHz	0x01	100 Kbps	-	-
6 MHz	0x02	100 Kbps	-	-
12.5 MHz	0x06	89 Kbps	0x01	312 Kbps
16.7 MHz	0x08	93 Kbps	0x02	278 Kbps
20 MHz	0x09	100 Kbps	0x02	333 Kbps
25 MHz	0x0C	96.2 Kbps	0x03	312 Kbps

Table 13-3. Examples of I²C Master Timer Period versus Speed Mode *(continued)*

System Clock	Timer Period	Standard Mode	Timer Period	Fast Mode
33 MHz	0x10	97.1 Kbps	0x04	330 Kbps
40 MHz	0x13	100 Kbps	0x04	400 Kbps
50 MHz	0x18	100 Kbps	0x06	357 Kbps

13.3.3 Interrupts

The I²C can generate interrupts when the following conditions are observed:

- Master transaction completed
- Master arbitration lost
- Master transaction error
- Slave transaction received
- Slave transaction requested

There is a separate interrupt signal for the I²C master and I²C slave modules. While both modules can generate interrupts for multiple conditions, only a single interrupt signal is sent to the interrupt controller.

13.3.3.1 I²C Master Interrupts

The I²C master module generates an interrupt when a transaction completes (either transmit or receive), when arbitration is lost, or when an error occurs during a transaction. To enable the I²C master interrupt, software must set the `IM` bit in the **I²C Master Interrupt Mask (I2CMIMR)** register. When an interrupt condition is met, software must check the `ERROR` and `ARBLST` bits in the **I²C Master Control/Status (I2CMCS)** register to verify that an error didn't occur during the last transaction and to ensure that arbitration has not been lost. An error condition is asserted if the last transaction wasn't acknowledged by the slave. If an error is not detected and the master has not lost arbitration, the application can proceed with the transfer. The interrupt is cleared by writing a 1 to the `IC` bit in the **I²C Master Interrupt Clear (I2CMICR)** register.

If the application doesn't require the use of interrupts, the raw interrupt status is always visible via the **I²C Master Raw Interrupt Status (I2CMRIS)** register.

13.3.3.2 I²C Slave Interrupts

The slave module can generate an interrupt when data has been received or requested. This interrupt is enabled by writing a 1 to the `DATAIM` bit in the **I²C Slave Interrupt Mask (I2CSIMR)** register. Software determines whether the module should write (transmit) or read (receive) data from the **I²C Slave Data (I2CSDR)** register, by checking the `RREQ` and `TREQ` bits of the **I²C Slave Control/Status (I2CSCSR)** register. If the slave module is in receive mode and the first byte of a transfer is received, the `FBR` bit is set along with the `RREQ` bit. The interrupt is cleared by writing a 1 to the `DATAIC` bit in the **I²C Slave Interrupt Clear (I2CSICR)** register.

If the application doesn't require the use of interrupts, the raw interrupt status is always visible via the **I²C Slave Raw Interrupt Status (I2CSRIS)** register.

13.3.4 Loopback Operation

The I^2C modules can be placed into an internal loopback mode for diagnostic or debug work. This is accomplished by setting the LPBK bit in the **I^2C Master Configuration (I2CMCR)** register. In loopback mode, the SDA and SCL signals from the master and slave modules are tied together.

13.3.5 Command Sequence Flow Charts

This section details the steps required to perform the various I^2C transfer types in both master and slave mode.

13.3.5.1 I^2C Master Command Sequences

The figures that follow show the command sequences available for the I^2C master.

Figure 13-7. Master Single SEND

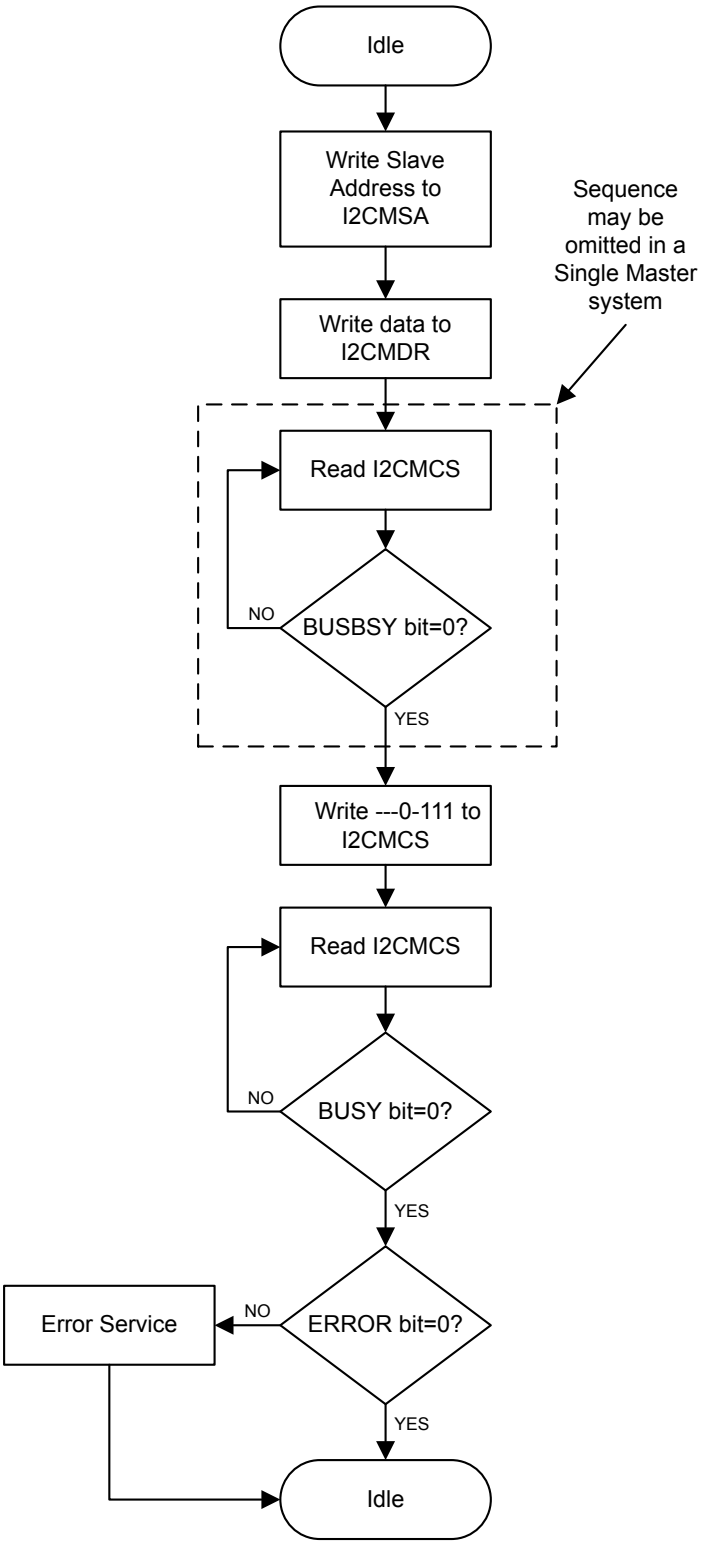

Figure 13-8. Master Single RECEIVE

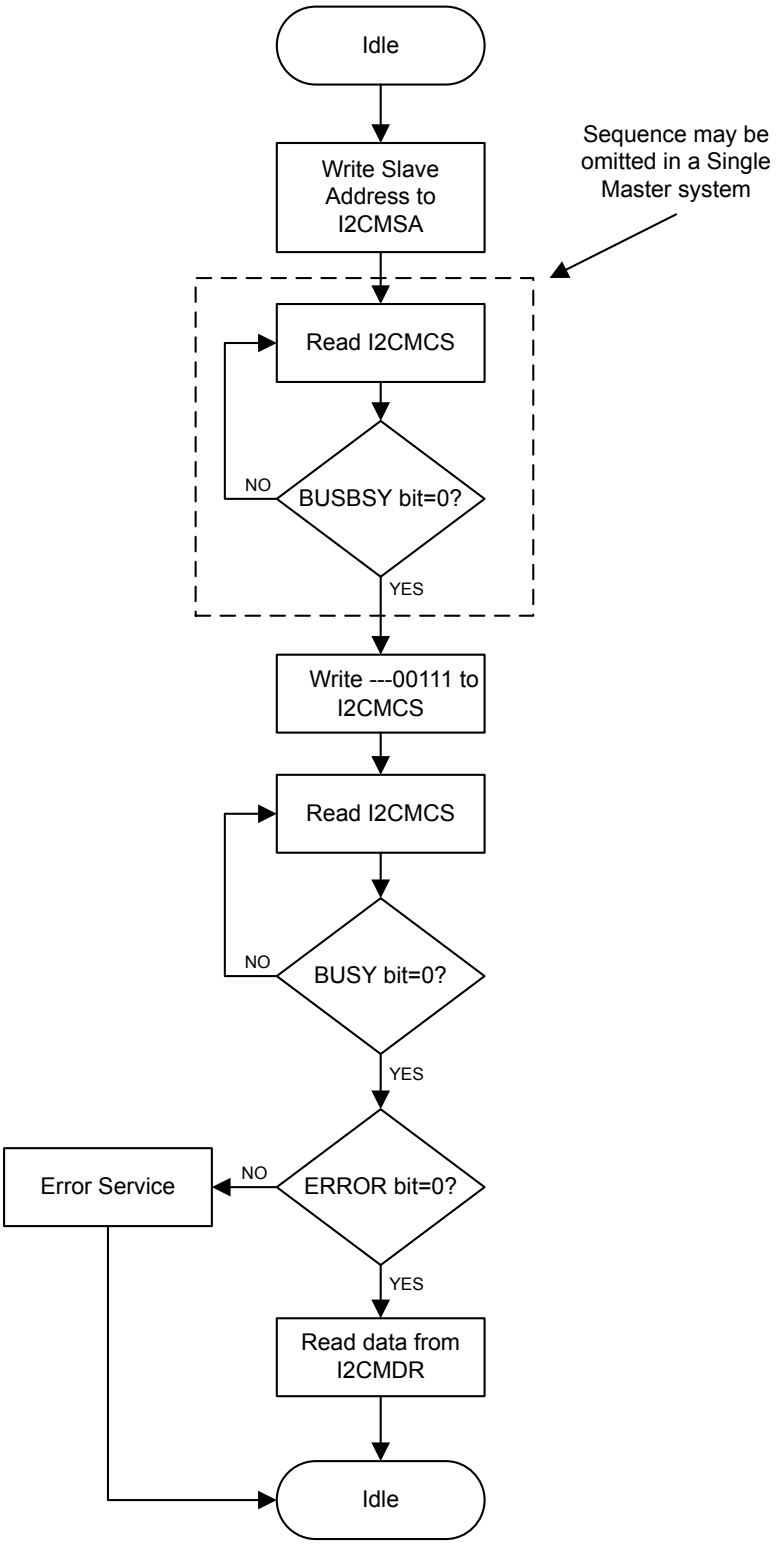

Figure 13-9. Master Burst SEND

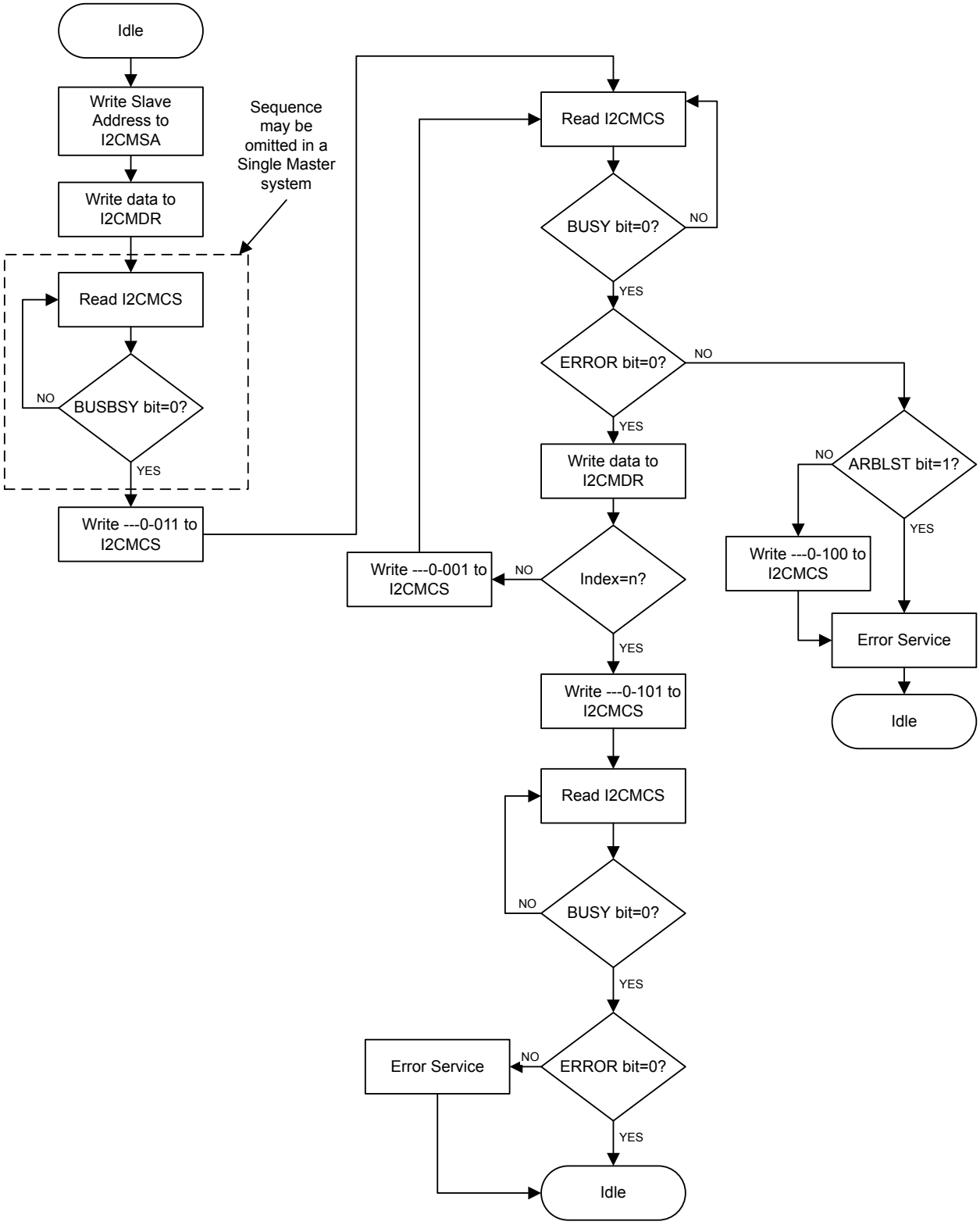

Figure 13-10. Master Burst RECEIVE

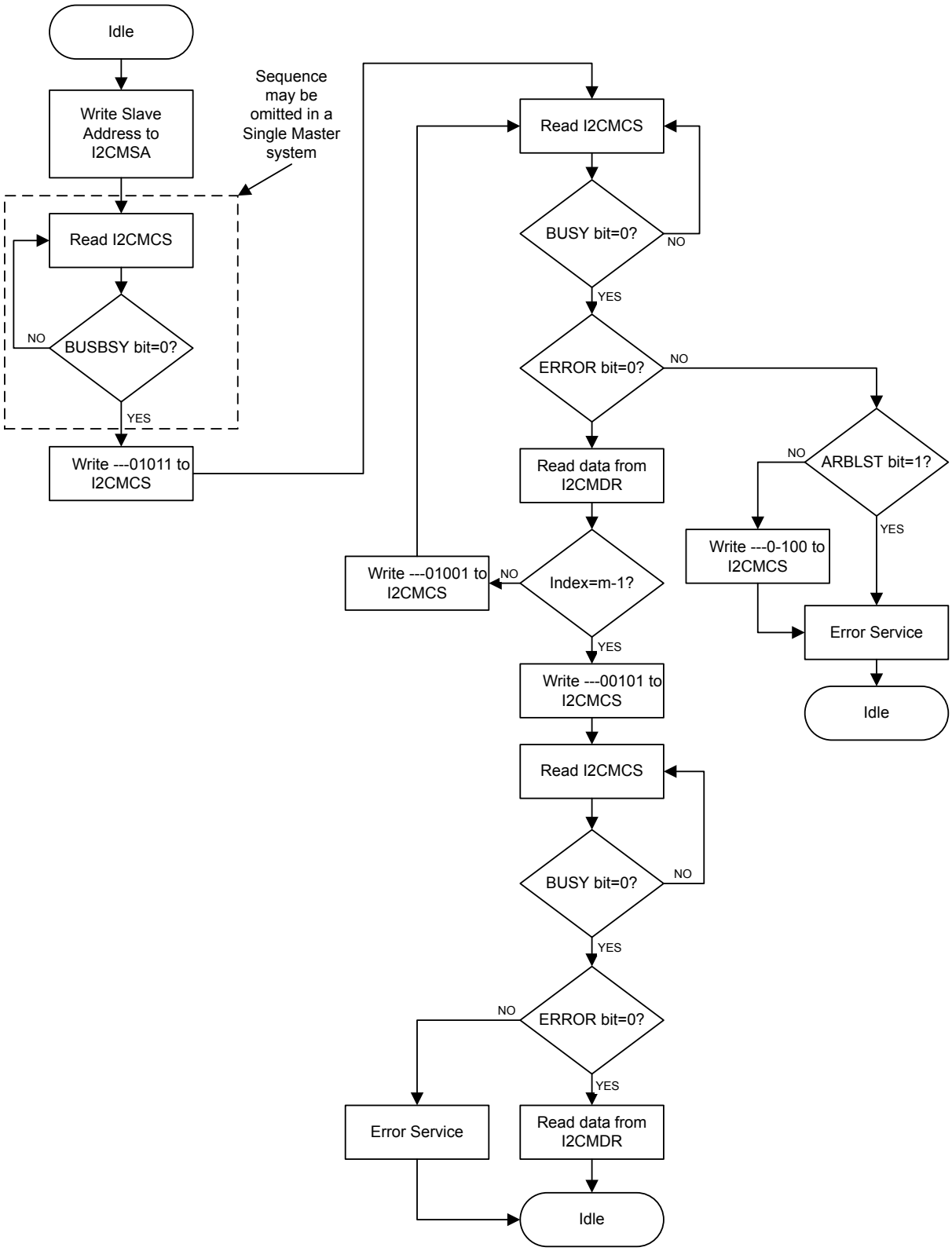

Figure 13-11. Master Burst RECEIVE after Burst SEND

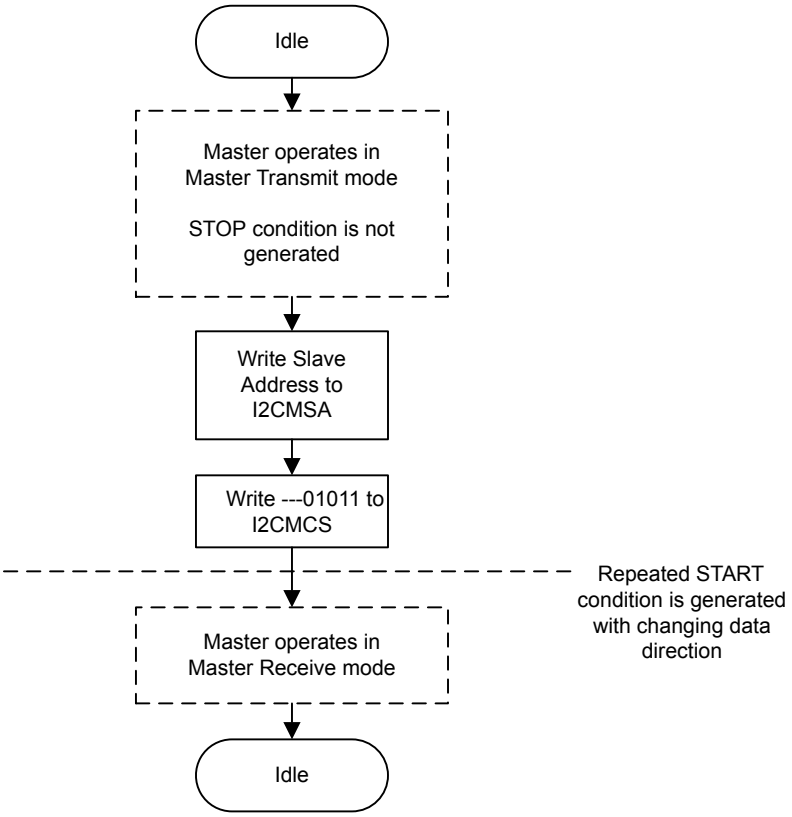

Figure 13-12. Master Burst SEND after Burst RECEIVE

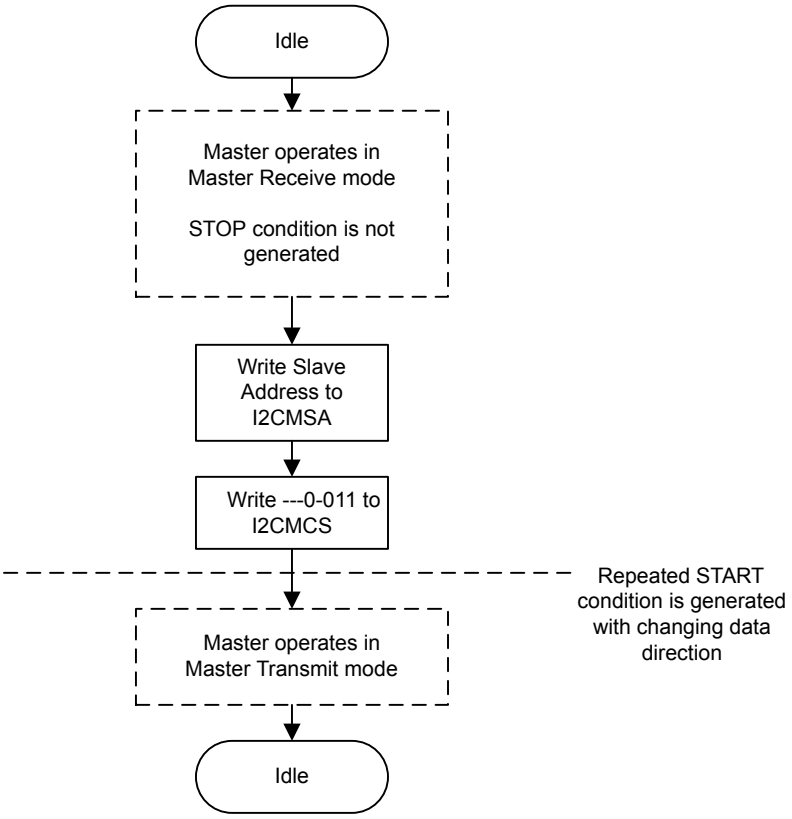

13.3.5.2 I2C Slave Command Sequences

Figure 13-13 on page 481 presents the command sequence available for the I2C slave.

Figure 13-13. Slave Command Sequence

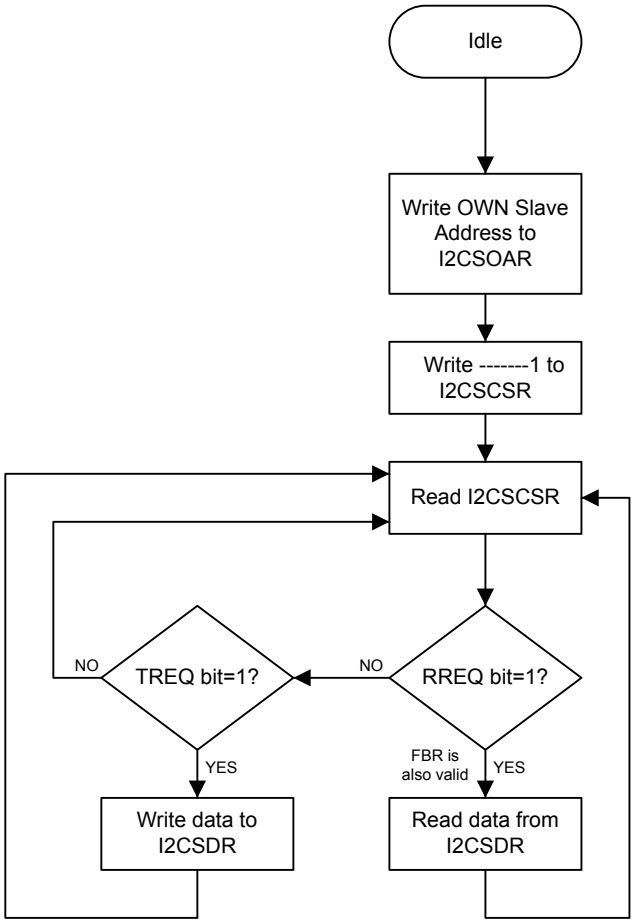

13.4 Initialization and Configuration

The following example shows how to configure the I^{2}C module to send a single byte as a master. This assumes the system clock is 20 MHz.

1. Enable the I^{2}C clock by writing a value of 0x0000.1000 to the **RCGC1** register in the System Control module.
2. Enable the clock to the appropriate GPIO module via the **RCGC2** register in the System Control module.
3. In the GPIO module, enable the appropriate pins for their alternate function using the **GPIOAFSEL** register. Also, be sure to enable the same pins for Open Drain operation.
4. Initialize the I^{2}C Master by writing the **I2CMCR** register with a value of 0x0000.0020.
5. Set the desired SCL clock speed of 100 Kbps by writing the **I2CMTPR** register with the correct value. The value written to the **I2CMTPR** register represents the number of system clock periods in one SCL clock period. The TPR value is determined by the following equation:

```
TPR = (System Clock / (2 * (SCL_LP + SCL_HP) * SCL_CLK)) - 1;
TPR = (20MHz / (2 * (6 + 4) * 100000)) - 1;
TPR = 9
```

Write the **I2CMTPR** register with the value of 0x0000.0009.

6. Specify the slave address of the master and that the next operation will be a Send by writing the **I2CMSA** register with a value of 0x0000.0076. This sets the slave address to 0x3B.
7. Place data (byte) to be sent in the data register by writing the **I2CMDR** register with the desired data.
8. Initiate a single byte send of the data from Master to Slave by writing the **I2CMCS** register with a value of 0x0000.0007 (STOP, START, RUN).
9. Wait until the transmission completes by polling the **I2CMCS** register's BUSBSY bit until it has been cleared.

13.5 Register Map

Table 13-4 on page 482 lists the I2C registers. All addresses given are relative to the I2C base addresses for the master and slave:

- I2C 0: 0x4002.0000
- I2C 1: 0x4002.1000

Note that the I2C module clock must be enabled before the registers can be programmed (see page 212). There must be a delay of 3 system clocks after the I2C module clock is enabled before any I2C module registers are accessed.

The hw_i2c.h file in the StellarisWare® Driver Library uses a base address of 0x800 for the I2C slave registers. Be aware when using registers with offsets between 0x800 and 0x818 that StellarisWare uses an offset between 0x000 and 0x018 with the slave base address.

Table 13-4. Inter-Integrated Circuit (I2C) Interface Register Map

Offset	Name	Type	Reset	Description	See page
I2C Master					
0x000	I2CMSA	R/W	0x0000.0000	I2C Master Slave Address	484
0x004	I2CMCS	R/W	0x0000.0000	I2C Master Control/Status	485
0x008	I2CMDR	R/W	0x0000.0000	I2C Master Data	489
0x00C	I2CMTPR	R/W	0x0000.0001	I2C Master Timer Period	490
0x010	I2CMIMR	R/W	0x0000.0000	I2C Master Interrupt Mask	491
0x014	I2CMRIS	RO	0x0000.0000	I2C Master Raw Interrupt Status	492
0x018	I2CMMIS	RO	0x0000.0000	I2C Master Masked Interrupt Status	493
0x01C	I2CMICR	WO	0x0000.0000	I2C Master Interrupt Clear	494
0x020	I2CMCR	R/W	0x0000.0000	I2C Master Configuration	495

Table 13-4. Inter-Integrated Circuit (I^2C) Interface Register Map *(continued)*

Offset	Name	Type	Reset	Description	See page
I^2C Slave					
0x800	I2CSOAR	R/W	0x0000.0000	I2C Slave Own Address	497
0x804	I2CSCSR	RO	0x0000.0000	I2C Slave Control/Status	498
0x808	I2CSDR	R/W	0x0000.0000	I2C Slave Data	500
0x80C	I2CSIMR	R/W	0x0000.0000	I2C Slave Interrupt Mask	501
0x810	I2CSRIS	RO	0x0000.0000	I2C Slave Raw Interrupt Status	502
0x814	I2CSMIS	RO	0x0000.0000	I2C Slave Masked Interrupt Status	503
0x818	I2CSICR	WO	0x0000.0000	I2C Slave Interrupt Clear	504

13.6 Register Descriptions (I^2C Master)

The remainder of this section lists and describes the I^2C master registers, in numerical order by address offset. See also “Register Descriptions (I^2C Slave)” on page 496.

Register 1: I²C Master Slave Address (I2CMSA), offset 0x000

This register consists of eight bits: seven address bits (A6-A0), and a Receive/Send bit, which determines if the next operation is a Receive (High), or Send (Low).

I2C Master Slave Address (I2CMSA)

I2C 0 base: 0x4002.0000
I2C 1 base: 0x4002.1000
Offset 0x000
Type R/W, reset 0x0000.0000

	31	30	29	28	27	26	25	24	23	22	21	20	19	18	17	16
	reserved															
Type	RO	RO	RO	RO	RO	RO	RO	RO	RO	RO	RO	RO	RO	RO	RO	RO
Reset	0	0	0	0	0	0	0	0	0	0	0	0	0	0	0	0

	15	14	13	12	11	10	9	8	7	6	5	4	3	2	1	0
	reserved								SA							R/S
Type	RO	RO	RO	RO	RO	RO	RO	RO	R/W	R/W	R/W	R/W	R/W	R/W	R/W	R/W
Reset	0	0	0	0	0	0	0	0	0	0	0	0	0	0	0	0

Bit/Field	Name	Type	Reset	Description
31:8	reserved	RO	0x00	Software should not rely on the value of a reserved bit. To provide compatibility with future products, the value of a reserved bit should be preserved across a read-modify-write operation.
7:1	SA	R/W	0	I²C Slave Address This field specifies bits A6 through A0 of the slave address.
0	R/S	R/W	0	Receive/Send The R/S bit specifies if the next operation is a Receive (High) or Send (Low). Value Description 0 Send. 1 Receive.

Register 2: I²C Master Control/Status (I2CMCS), offset 0x004

This register accesses four control bits when written, and accesses seven status bits when read.

The status register consists of seven bits, which when read determine the state of the I²C bus controller.

The control register consists of four bits: the RUN, START, STOP, and ACK bits. The START bit causes the generation of the START, or REPEATED START condition.

The STOP bit determines if the cycle stops at the end of the data cycle, or continues on to a burst. To generate a single send cycle, the **I²C Master Slave Address (I2CMSA)** register is written with the desired address, the R/S bit is set to 0, and the Control register is written with ACK=X (0 or 1), STOP=1, START=1, and RUN=1 to perform the operation and stop. When the operation is completed (or aborted due an error), the interrupt pin becomes active and the data may be read from the **I2CMDR** register. When the I²C module operates in Master receiver mode, the ACK bit must be set normally to logic 1. This causes the I²C bus controller to send an acknowledge automatically after each byte. This bit must be reset when the I²C bus controller requires no further data to be sent from the slave transmitter.

Reads

I2C Master Control/Status (I2CMCS)

I2C 0 base: 0x4002.0000
I2C 1 base: 0x4002.1000
Offset 0x004
Type RO, reset 0x0000.0000

	31	30	29	28	27	26	25	24	23	22	21	20	19	18	17	16
	reserved															
Type	RO	RO	RO	RO	RO	RO	RO	RO	RO	RO	RO	RO	RO	RO	RO	RO
Reset	0	0	0	0	0	0	0	0	0	0	0	0	0	0	0	0

	15	14	13	12	11	10	9	8	7	6	5	4	3	2	1	0
	reserved									BUSBSY	IDLE	ARBLST	DATACK	ADRACK	ERROR	BUSY
Type	RO	RO	RO	RO	RO	RO	RO	RO	RO	RO	RO	RO	RO	RO	RO	RO
Reset	0	0	0	0	0	0	0	0	0	0	0	0	0	0	0	0

Bit/Field	Name	Type	Reset	Description
31:7	reserved	RO	0x00	Software should not rely on the value of a reserved bit. To provide compatibility with future products, the value of a reserved bit should be preserved across a read-modify-write operation.
6	BUSBSY	RO	0	Bus Busy This bit specifies the state of the I²C bus. If set, the bus is busy; otherwise, the bus is idle. The bit changes based on the START and STOP conditions.
5	IDLE	RO	0	I²C Idle This bit specifies the I²C controller state. If set, the controller is idle; otherwise the controller is not idle.
4	ARBLST	RO	0	Arbitration Lost This bit specifies the result of bus arbitration. If set, the controller lost arbitration; otherwise, the controller won arbitration.

Bit/Field	Name	Type	Reset	Description
3	DATACK	RO	0	Acknowledge Data This bit specifies the result of the last data operation. If set, the transmitted data was not acknowledged; otherwise, the data was acknowledged.
2	ADRACK	RO	0	Acknowledge Address This bit specifies the result of the last address operation. If set, the transmitted address was not acknowledged; otherwise, the address was acknowledged.
1	ERROR	RO	0	Error This bit specifies the result of the last bus operation. If set, an error occurred on the last operation; otherwise, no error was detected. The error can be from the slave address not being acknowledged or the transmit data not being acknowledged.
0	BUSY	RO	0	I^2C Busy This bit specifies the state of the controller. If set, the controller is busy; otherwise, the controller is idle. When the BUSY bit is set, the other status bits are not valid.

Writes

I2C Master Control/Status (I2CMCS)

I2C 0 base: 0x4002.0000
I2C 1 base: 0x4002.1000
Offset 0x004
Type WO, reset 0x0000.0000

	31	30	29	28	27	26	25	24	23	22	21	20	19	18	17	16
	reserved															
Type	WO	WO	WO	WO	WO	WO	WO	WO	WO	WO	WO	WO	WO	WO	WO	WO
Reset	0	0	0	0	0	0	0	0	0	0	0	0	0	0	0	0

	15	14	13	12	11	10	9	8	7	6	5	4	3	2	1	0
	reserved												ACK	STOP	START	RUN
Type	WO	WO	WO	WO	WO	WO	WO	WO	WO	WO	WO	WO	WO	WO	WO	WO
Reset	0	0	0	0	0	0	0	0	0	0	0	0	0	0	0	0

Bit/Field	Name	Type	Reset	Description
31:4	reserved	WO	0x00	Software should not rely on the value of a reserved bit. To provide compatibility with future products, the value of a reserved bit should be preserved across a read-modify-write operation.
3	ACK	WO	0	Data Acknowledge Enable When set, causes received data byte to be acknowledged automatically by the master. See field decoding in Table 13-5 on page 487.
2	STOP	WO	0	Generate STOP When set, causes the generation of the STOP condition. See field decoding in Table 13-5 on page 487.
1	START	WO	0	Generate START When set, causes the generation of a START or repeated START condition. See field decoding in Table 13-5 on page 487.

Bit/Field	Name	Type	Reset	Description
0	RUN	WO	0	I^2C Master Enable When set, allows the master to send or receive data. See field decoding in Table 13-5 on page 487.

Table 13-5. Write Field Decoding for I2CMCS[3:0] Field (Sheet 1 of 3)

Current State	I2CMSA[0]	I2CMCS[3:0]				Description
	R/S	ACK	STOP	START	RUN	
Idle	0	X[a]	0	1	1	START condition followed by SEND (master goes to the Master Transmit state).
	0	X	1	1	1	START condition followed by a SEND and STOP condition (master remains in Idle state).
	1	0	0	1	1	START condition followed by RECEIVE operation with negative ACK (master goes to the Master Receive state).
	1	0	1	1	1	START condition followed by RECEIVE and STOP condition (master remains in Idle state).
	1	1	0	1	1	START condition followed by RECEIVE (master goes to the Master Receive state).
	1	1	1	1	1	Illegal.
	All other combinations not listed are non-operations.					NOP.
Master Transmit	X	X	0	0	1	SEND operation (master remains in Master Transmit state).
	X	X	1	0	0	STOP condition (master goes to Idle state).
	X	X	1	0	1	SEND followed by STOP condition (master goes to Idle state).
	0	X	0	1	1	Repeated START condition followed by a SEND (master remains in Master Transmit state).
	0	X	1	1	1	Repeated START condition followed by SEND and STOP condition (master goes to Idle state).
	1	0	0	1	1	Repeated START condition followed by a RECEIVE operation with a negative ACK (master goes to Master Receive state).
	1	0	1	1	1	Repeated START condition followed by a SEND and STOP condition (master goes to Idle state).
	1	1	0	1	1	Repeated START condition followed by RECEIVE (master goes to Master Receive state).
	1	1	1	1	1	Illegal.
	All other combinations not listed are non-operations.					NOP.

Table 13-5. Write Field Decoding for I2CMCS[3:0] Field (Sheet 1 of 3) *(continued)*

Current State	I2CMSA[0]	I2CMCS[3:0]				Description
	R/S	ACK	STOP	START	RUN	
Master Receive	X	0	0	0	1	RECEIVE operation with negative ACK (master remains in Master Receive state).
	X	X	1	0	0	STOP condition (master goes to Idle state).[b]
	X	0	1	0	1	RECEIVE followed by STOP condition (master goes to Idle state).
	X	1	0	0	1	RECEIVE operation (master remains in Master Receive state).
	X	1	1	0	1	Illegal.
	1	0	0	1	1	Repeated START condition followed by RECEIVE operation with a negative ACK (master remains in Master Receive state).
	1	0	1	1	1	Repeated START condition followed by RECEIVE and STOP condition (master goes to Idle state).
	1	1	0	1	1	Repeated START condition followed by RECEIVE (master remains in Master Receive state).
	0	X	0	1	1	Repeated START condition followed by SEND (master goes to Master Transmit state).
	0	X	1	1	1	Repeated START condition followed by SEND and STOP condition (master goes to Idle state).
	All other combinations not listed are non-operations.					NOP.

a. An X in a table cell indicates the bit can be 0 or 1.

b. In Master Receive mode, a STOP condition should be generated only after a Data Negative Acknowledge executed by the master or an Address Negative Acknowledge executed by the slave.

Register 3: I²C Master Data (I2CMDR), offset 0x008

Important: This register is read-sensitive. See the register description for details.

This register contains the data to be transmitted when in the Master Transmit state, and the data received when in the Master Receive state.

I2C Master Data (I2CMDR)

I2C 0 base: 0x4002.0000
I2C 1 base: 0x4002.1000
Offset 0x008
Type R/W, reset 0x0000.0000

	31	30	29	28	27	26	25	24	23	22	21	20	19	18	17	16
	reserved															
Type	RO	RO	RO	RO	RO	RO	RO	RO	RO	RO	RO	RO	RO	RO	RO	RO
Reset	0	0	0	0	0	0	0	0	0	0	0	0	0	0	0	0

	15	14	13	12	11	10	9	8	7	6	5	4	3	2	1	0
	reserved								DATA							
Type	RO	RO	RO	RO	RO	RO	RO	RO	R/W	R/W	R/W	R/W	R/W	R/W	R/W	R/W
Reset	0	0	0	0	0	0	0	0	0	0	0	0	0	0	0	0

Bit/Field	Name	Type	Reset	Description
31:8	reserved	RO	0x00	Software should not rely on the value of a reserved bit. To provide compatibility with future products, the value of a reserved bit should be preserved across a read-modify-write operation.
7:0	DATA	R/W	0x00	Data Transferred Data transferred during transaction.

Register 4: I^2C Master Timer Period (I2CMTPR), offset 0x00C

This register specifies the period of the SCL clock.

Caution – Take care not to set bit 7 when accessing this register as unpredictable behavior can occur.

I2C Master Timer Period (I2CMTPR)

I2C 0 base: 0x4002.0000
I2C 1 base: 0x4002.1000
Offset 0x00C
Type R/W, reset 0x0000.0001

	31	30	29	28	27	26	25	24	23	22	21	20	19	18	17	16
	reserved															
Type	RO	RO	RO	RO	RO	RO	RO	RO	RO	RO	RO	RO	RO	RO	RO	RO
Reset	0	0	0	0	0	0	0	0	0	0	0	0	0	0	0	0

	15	14	13	12	11	10	9	8	7	6	5	4	3	2	1	0
	reserved									TPR						
Type	RO	RO	RO	RO	RO	RO	RO	RO	RO	R/W	R/W	R/W	R/W	R/W	R/W	R/W
Reset	0	0	0	0	0	0	0	0	0	0	0	0	0	0	0	1

Bit/Field	Name	Type	Reset	Description
31:7	reserved	RO	0x00	Software should not rely on the value of a reserved bit. To provide compatibility with future products, the value of a reserved bit should be preserved across a read-modify-write operation.
6:0	TPR	R/W	0x1	SCL Clock Period This field specifies the period of the SCL clock. `SCL_PRD = 2*(1 + TPR)*(SCL_LP + SCL_HP)*CLK_PRD` where: `SCL_PRD` is the SCL line period (I^2C clock). `TPR` is the Timer Period register value (range of 1 to 127). `SCL_LP` is the SCL Low period (fixed at 6). `SCL_HP` is the SCL High period (fixed at 4).

Register 5: I²C Master Interrupt Mask (I2CMIMR), offset 0x010

This register controls whether a raw interrupt is promoted to a controller interrupt.

I2C Master Interrupt Mask (I2CMIMR)

I2C 0 base: 0x4002.0000
I2C 1 base: 0x4002.1000
Offset 0x010
Type R/W, reset 0x0000.0000

	31	30	29	28	27	26	25	24	23	22	21	20	19	18	17	16
	reserved															
Type	RO	RO	RO	RO	RO	RO	RO	RO	RO	RO	RO	RO	RO	RO	RO	RO
Reset	0	0	0	0	0	0	0	0	0	0	0	0	0	0	0	0

	15	14	13	12	11	10	9	8	7	6	5	4	3	2	1	0
	reserved															IM
Type	RO	RO	RO	RO	RO	RO	RO	RO	RO	RO	RO	RO	RO	RO	RO	R/W
Reset	0	0	0	0	0	0	0	0	0	0	0	0	0	0	0	0

Bit/Field	Name	Type	Reset	Description
31:1	reserved	RO	0x00	Software should not rely on the value of a reserved bit. To provide compatibility with future products, the value of a reserved bit should be preserved across a read-modify-write operation.
0	IM	R/W	0	Interrupt Mask This bit controls whether a raw interrupt is promoted to a controller interrupt. If set, the interrupt is not masked and the interrupt is promoted; otherwise, the interrupt is masked.

Register 6: I^2C Master Raw Interrupt Status (I2CMRIS), offset 0x014

This register specifies whether an interrupt is pending.

I2C Master Raw Interrupt Status (I2CMRIS)

I2C 0 base: 0x4002.0000
I2C 1 base: 0x4002.1000
Offset 0x014
Type RO, reset 0x0000.0000

	31	30	29	28	27	26	25	24	23	22	21	20	19	18	17	16
	reserved															
Type	RO	RO	RO	RO	RO	RO	RO	RO	RO	RO	RO	RO	RO	RO	RO	RO
Reset	0	0	0	0	0	0	0	0	0	0	0	0	0	0	0	0

	15	14	13	12	11	10	9	8	7	6	5	4	3	2	1	0
	reserved															RIS
Type	RO	RO	RO	RO	RO	RO	RO	RO	RO	RO	RO	RO	RO	RO	RO	RO
Reset	0	0	0	0	0	0	0	0	0	0	0	0	0	0	0	0

Bit/Field	Name	Type	Reset	Description
31:1	reserved	RO	0x00	Software should not rely on the value of a reserved bit. To provide compatibility with future products, the value of a reserved bit should be preserved across a read-modify-write operation.
0	RIS	RO	0	Raw Interrupt Status This bit specifies the raw interrupt state (prior to masking) of the I^2C master block. If set, an interrupt is pending; otherwise, an interrupt is not pending.

Register 7: I²C Master Masked Interrupt Status (I2CMMIS), offset 0x018

This register specifies whether an interrupt was signaled.

I2C Master Masked Interrupt Status (I2CMMIS)

I2C 0 base: 0x4002.0000
I2C 1 base: 0x4002.1000
Offset 0x018
Type RO, reset 0x0000.0000

	31	30	29	28	27	26	25	24	23	22	21	20	19	18	17	16
	reserved															
Type	RO	RO	RO	RO	RO	RO	RO	RO	RO	RO	RO	RO	RO	RO	RO	RO
Reset	0	0	0	0	0	0	0	0	0	0	0	0	0	0	0	0

	15	14	13	12	11	10	9	8	7	6	5	4	3	2	1	0
	reserved															MIS
Type	RO	RO	RO	RO	RO	RO	RO	RO	RO	RO	RO	RO	RO	RO	RO	RO
Reset	0	0	0	0	0	0	0	0	0	0	0	0	0	0	0	0

Bit/Field	Name	Type	Reset	Description
31:1	reserved	RO	0x00	Software should not rely on the value of a reserved bit. To provide compatibility with future products, the value of a reserved bit should be preserved across a read-modify-write operation.
0	MIS	RO	0	Masked Interrupt Status This bit specifies the raw interrupt state (after masking) of the I²C master block. If set, an interrupt was signaled; otherwise, an interrupt has not been generated since the bit was last cleared.

Register 8: I^2C Master Interrupt Clear (I2CMICR), offset 0x01C

This register clears the raw interrupt.

I2C Master Interrupt Clear (I2CMICR)

I2C 0 base: 0x4002.0000
I2C 1 base: 0x4002.1000
Offset 0x01C
Type WO, reset 0x0000.0000

	31	30	29	28	27	26	25	24	23	22	21	20	19	18	17	16
	reserved															
Type	RO	RO	RO	RO	RO	RO	RO	RO	RO	RO	RO	RO	RO	RO	RO	RO
Reset	0	0	0	0	0	0	0	0	0	0	0	0	0	0	0	0

	15	14	13	12	11	10	9	8	7	6	5	4	3	2	1	0
	reserved															IC
Type	RO	RO	RO	RO	RO	RO	RO	RO	RO	RO	RO	RO	RO	RO	RO	WO
Reset	0	0	0	0	0	0	0	0	0	0	0	0	0	0	0	0

Bit/Field	Name	Type	Reset	Description
31:1	reserved	RO	0x00	Software should not rely on the value of a reserved bit. To provide compatibility with future products, the value of a reserved bit should be preserved across a read-modify-write operation.
0	IC	WO	0	Interrupt Clear This bit controls the clearing of the raw interrupt. A write of 1 clears the interrupt; otherwise, a write of 0 has no affect on the interrupt state. A read of this register returns no meaningful data.

Register 9: I²C Master Configuration (I2CMCR), offset 0x020

This register configures the mode (Master or Slave) and sets the interface for test mode loopback.

I2C Master Configuration (I2CMCR)

I2C 0 base: 0x4002.0000
I2C 1 base: 0x4002.1000
Offset 0x020
Type R/W, reset 0x0000.0000

	31	30	29	28	27	26	25	24	23	22	21	20	19	18	17	16
	reserved															
Type	RO	RO	RO	RO	RO	RO	RO	RO	RO	RO	RO	RO	RO	RO	RO	RO
Reset	0	0	0	0	0	0	0	0	0	0	0	0	0	0	0	0

	15	14	13	12	11	10	9	8	7	6	5	4	3	2	1	0
	reserved										SFE	MFE	reserved			LPBK
Type	RO	RO	RO	RO	RO	RO	RO	RO	RO	RO	R/W	R/W	RO	RO	RO	R/W
Reset	0	0	0	0	0	0	0	0	0	0	0	0	0	0	0	0

Bit/Field	Name	Type	Reset	Description
31:6	reserved	RO	0x00	Software should not rely on the value of a reserved bit. To provide compatibility with future products, the value of a reserved bit should be preserved across a read-modify-write operation.
5	SFE	R/W	0	I²C Slave Function Enable This bit specifies whether the interface may operate in Slave mode. If set, Slave mode is enabled; otherwise, Slave mode is disabled.
4	MFE	R/W	0	I²C Master Function Enable This bit specifies whether the interface may operate in Master mode. If set, Master mode is enabled; otherwise, Master mode is disabled and the interface clock is disabled.
3:1	reserved	RO	0x00	Software should not rely on the value of a reserved bit. To provide compatibility with future products, the value of a reserved bit should be preserved across a read-modify-write operation.
0	LPBK	R/W	0	I²C Loopback This bit specifies whether the interface is operating normally or in Loopback mode. If set, the device is put in a test mode loopback configuration; otherwise, the device operates normally.

13.7 Register Descriptions (I^2C Slave)

The remainder of this section lists and describes the I^2C slave registers, in numerical order by address offset. See also “Register Descriptions (I^2C Master)” on page 483.

Register 10: I²C Slave Own Address (I2CSOAR), offset 0x800

This register consists of seven address bits that identify the Stellaris I²C device on the I²C bus.

I2C Slave Own Address (I2CSOAR)

I2C 0 base: 0x4002.0000
I2C 1 base: 0x4002.1000
Offset 0x800
Type R/W, reset 0x0000.0000

	31	30	29	28	27	26	25	24	23	22	21	20	19	18	17	16
	reserved															
Type	RO	RO	RO	RO	RO	RO	RO	RO	RO	RO	RO	RO	RO	RO	RO	RO
Reset	0	0	0	0	0	0	0	0	0	0	0	0	0	0	0	0

	15	14	13	12	11	10	9	8	7	6	5	4	3	2	1	0
	reserved									OAR						
Type	RO	RO	RO	RO	RO	RO	RO	RO	RO	R/W	R/W	R/W	R/W	R/W	R/W	R/W
Reset	0	0	0	0	0	0	0	0	0	0	0	0	0	0	0	0

Bit/Field	Name	Type	Reset	Description
31:7	reserved	RO	0x00	Software should not rely on the value of a reserved bit. To provide compatibility with future products, the value of a reserved bit should be preserved across a read-modify-write operation.
6:0	OAR	R/W	0x00	I²C Slave Own Address This field specifies bits A6 through A0 of the slave address.

Register 11: I^2C Slave Control/Status (I2CSCSR), offset 0x804

This register accesses one control bit when written, and three status bits when read.

The read-only Status register consists of three bits: the `FBR`, `RREQ`, and `TREQ` bits. The `First Byte Received (FBR)` bit is set only after the Stellaris device detects its own slave address and receives the first data byte from the I^2C master. The `Receive Request (RREQ)` bit indicates that the Stellaris I^2C device has received a data byte from an I^2C master. Read one data byte from the **I^2C Slave Data (I2CSDR)** register to clear the `RREQ` bit. The `Transmit Request (TREQ)` bit indicates that the Stellaris I^2C device is addressed as a Slave Transmitter. Write one data byte into the **I^2C Slave Data (I2CSDR)** register to clear the `TREQ` bit.

The write-only Control register consists of one bit: the `DA` bit. The `DA` bit enables and disables the Stellaris I^2C slave operation.

Reads

I2C Slave Control/Status (I2CSCSR)

I2C 0 base: 0x4002.0000
I2C 1 base: 0x4002.1000
Offset 0x804
Type RO, reset 0x0000.0000

	31	30	29	28	27	26	25	24	23	22	21	20	19	18	17	16
	reserved															
Type	RO	RO	RO	RO	RO	RO	RO	RO	RO	RO	RO	RO	RO	RO	RO	RO
Reset	0	0	0	0	0	0	0	0	0	0	0	0	0	0	0	0

	15	14	13	12	11	10	9	8	7	6	5	4	3	2	1	0
	reserved													FBR	TREQ	RREQ
Type	RO	RO	RO	RO	RO	RO	RO	RO	RO	RO	RO	RO	RO	RO	RO	RO
Reset	0	0	0	0	0	0	0	0	0	0	0	0	0	0	0	0

Bit/Field	Name	Type	Reset	Description
31:3	reserved	RO	0x00	Software should not rely on the value of a reserved bit. To provide compatibility with future products, the value of a reserved bit should be preserved across a read-modify-write operation.
2	FBR	RO	0	First Byte Received Indicates that the first byte following the slave's own address is received. This bit is only valid when the `RREQ` bit is set, and is automatically cleared when data has been read from the **I2CSDR** register. **Note:** This bit is not used for slave transmit operations.
1	TREQ	RO	0	Transmit Request This bit specifies the state of the I^2C slave with regards to outstanding transmit requests. If set, the I^2C unit has been addressed as a slave transmitter and uses clock stretching to delay the master until data has been written to the **I2CSDR** register. Otherwise, there is no outstanding transmit request.
0	RREQ	RO	0	Receive Request This bit specifies the status of the I^2C slave with regards to outstanding receive requests. If set, the I^2C unit has outstanding receive data from the I^2C master and uses clock stretching to delay the master until the data has been read from the **I2CSDR** register. Otherwise, no receive data is outstanding.

Writes

I2C Slave Control/Status (I2CSCSR)

I2C 0 base: 0x4002.0000
I2C 1 base: 0x4002.1000
Offset 0x804
Type WO, reset 0x0000.0000

	31	30	29	28	27	26	25	24	23	22	21	20	19	18	17	16
	reserved															
Type	RO	RO	RO	RO	RO	RO	RO	RO	RO	RO	RO	RO	RO	RO	RO	RO
Reset	0	0	0	0	0	0	0	0	0	0	0	0	0	0	0	0

	15	14	13	12	11	10	9	8	7	6	5	4	3	2	1	0
	reserved															DA
Type	RO	RO	RO	RO	RO	RO	RO	RO	RO	RO	RO	RO	RO	RO	RO	WO
Reset	0	0	0	0	0	0	0	0	0	0	0	0	0	0	0	0

Bit/Field	Name	Type	Reset	Description
31:1	reserved	RO	0x00	Software should not rely on the value of a reserved bit. To provide compatibility with future products, the value of a reserved bit should be preserved across a read-modify-write operation.
0	DA	WO	0	Device Active Value Description 0 Disables the I^2C slave operation. 1 Enables the I^2C slave operation. Once this bit has been set, it should not be set again unless it has been cleared by writing a 0 or by a reset, otherwise transfer failures may occur.

Register 12: I^2C Slave Data (I2CSDR), offset 0x808

Important: This register is read-sensitive. See the register description for details.

This register contains the data to be transmitted when in the Slave Transmit state, and the data received when in the Slave Receive state.

I2C Slave Data (I2CSDR)

I2C 0 base: 0x4002.0000
I2C 1 base: 0x4002.1000
Offset 0x808
Type R/W, reset 0x0000.0000

	31	30	29	28	27	26	25	24	23	22	21	20	19	18	17	16
	reserved															
Type	RO	RO	RO	RO	RO	RO	RO	RO	RO	RO	RO	RO	RO	RO	RO	RO
Reset	0	0	0	0	0	0	0	0	0	0	0	0	0	0	0	0

	15	14	13	12	11	10	9	8	7	6	5	4	3	2	1	0
	reserved								DATA							
Type	RO	RO	RO	RO	RO	RO	RO	RO	R/W	R/W	R/W	R/W	R/W	R/W	R/W	R/W
Reset	0	0	0	0	0	0	0	0	0	0	0	0	0	0	0	0

Bit/Field	Name	Type	Reset	Description
31:8	reserved	RO	0x00	Software should not rely on the value of a reserved bit. To provide compatibility with future products, the value of a reserved bit should be preserved across a read-modify-write operation.
7:0	DATA	R/W	0x0	Data for Transfer This field contains the data for transfer during a slave receive or transmit operation.

Register 13: I²C Slave Interrupt Mask (I2CSIMR), offset 0x80C

This register controls whether a raw interrupt is promoted to a controller interrupt.

I2C Slave Interrupt Mask (I2CSIMR)

I2C 0 base: 0x4002.0000
I2C 1 base: 0x4002.1000
Offset 0x80C
Type R/W, reset 0x0000.0000

	31	30	29	28	27	26	25	24	23	22	21	20	19	18	17	16
	reserved															
Type	RO	RO	RO	RO	RO	RO	RO	RO	RO	RO	RO	RO	RO	RO	RO	RO
Reset	0	0	0	0	0	0	0	0	0	0	0	0	0	0	0	0

	15	14	13	12	11	10	9	8	7	6	5	4	3	2	1	0
	reserved															DATAIM
Type	RO	RO	RO	RO	RO	RO	RO	RO	RO	RO	RO	RO	RO	RO	RO	R/W
Reset	0	0	0	0	0	0	0	0	0	0	0	0	0	0	0	0

Bit/Field	Name	Type	Reset	Description
31:1	reserved	RO	0x00	Software should not rely on the value of a reserved bit. To provide compatibility with future products, the value of a reserved bit should be preserved across a read-modify-write operation.
0	DATAIM	R/W	0	Data Interrupt Mask This bit controls whether the raw interrupt for data received and data requested is promoted to a controller interrupt. If set, the interrupt is not masked and the interrupt is promoted; otherwise, the interrupt is masked.

Register 14: I^2C Slave Raw Interrupt Status (I2CSRIS), offset 0x810

This register specifies whether an interrupt is pending.

I2C Slave Raw Interrupt Status (I2CSRIS)

I2C 0 base: 0x4002.0000
I2C 1 base: 0x4002.1000
Offset 0x810
Type RO, reset 0x0000.0000

	31	30	29	28	27	26	25	24	23	22	21	20	19	18	17	16
	reserved															
Type	RO	RO	RO	RO	RO	RO	RO	RO	RO	RO	RO	RO	RO	RO	RO	RO
Reset	0	0	0	0	0	0	0	0	0	0	0	0	0	0	0	0

	15	14	13	12	11	10	9	8	7	6	5	4	3	2	1	0
	reserved															DATARIS
Type	RO	RO	RO	RO	RO	RO	RO	RO	RO	RO	RO	RO	RO	RO	RO	RO
Reset	0	0	0	0	0	0	0	0	0	0	0	0	0	0	0	0

Bit/Field	Name	Type	Reset	Description
31:1	reserved	RO	0x00	Software should not rely on the value of a reserved bit. To provide compatibility with future products, the value of a reserved bit should be preserved across a read-modify-write operation.
0	DATARIS	RO	0	Data Raw Interrupt Status This bit specifies the raw interrupt state for data received and data requested (prior to masking) of the I^2C slave block. If set, an interrupt is pending; otherwise, an interrupt is not pending.

Register 15: I²C Slave Masked Interrupt Status (I2CSMIS), offset 0x814

This register specifies whether an interrupt was signaled.

I2C Slave Masked Interrupt Status (I2CSMIS)

I2C 0 base: 0x4002.0000
I2C 1 base: 0x4002.1000
Offset 0x814
Type RO, reset 0x0000.0000

	31	30	29	28	27	26	25	24	23	22	21	20	19	18	17	16
	reserved															
Type	RO	RO	RO	RO	RO	RO	RO	RO	RO	RO	RO	RO	RO	RO	RO	RO
Reset	0	0	0	0	0	0	0	0	0	0	0	0	0	0	0	0

	15	14	13	12	11	10	9	8	7	6	5	4	3	2	1	0
	reserved															DATAMIS
Type	RO	RO	RO	RO	RO	RO	RO	RO	RO	RO	RO	RO	RO	RO	RO	RO
Reset	0	0	0	0	0	0	0	0	0	0	0	0	0	0	0	0

Bit/Field	Name	Type	Reset	Description
31:1	reserved	RO	0x00	Software should not rely on the value of a reserved bit. To provide compatibility with future products, the value of a reserved bit should be preserved across a read-modify-write operation.
0	DATAMIS	RO	0	Data Masked Interrupt Status This bit specifies the interrupt state for data received and data requested (after masking) of the I²C slave block. If set, an interrupt was signaled; otherwise, an interrupt has not been generated since the bit was last cleared.

Register 16: I^2C Slave Interrupt Clear (I2CSICR), offset 0x818

This register clears the raw interrupt. A read of this register returns no meaningful data.

I2C Slave Interrupt Clear (I2CSICR)

I2C 0 base: 0x4002.0000
I2C 1 base: 0x4002.1000
Offset 0x818
Type WO, reset 0x0000.0000

	31	30	29	28	27	26	25	24	23	22	21	20	19	18	17	16
	reserved															
Type	RO	RO	RO	RO	RO	RO	RO	RO	RO	RO	RO	RO	RO	RO	RO	RO
Reset	0	0	0	0	0	0	0	0	0	0	0	0	0	0	0	0

	15	14	13	12	11	10	9	8	7	6	5	4	3	2	1	0
	reserved															DATAIC
Type	RO	RO	RO	RO	RO	RO	RO	RO	RO	RO	RO	RO	RO	RO	RO	WO
Reset	0	0	0	0	0	0	0	0	0	0	0	0	0	0	0	0

Bit/Field	Name	Type	Reset	Description
31:1	reserved	RO	0x00	Software should not rely on the value of a reserved bit. To provide compatibility with future products, the value of a reserved bit should be preserved across a read-modify-write operation.
0	DATAIC	WO	0	Data Interrupt Clear This bit controls the clearing of the raw interrupt for data received and data requested. When set, it clears the `DATARIS` interrupt bit; otherwise, it has no effect on the `DATARIS` bit value.

14 Controller Area Network (CAN) Module

Controller Area Network (CAN) is a multicast, shared serial bus standard for connecting electronic control units (ECUs). CAN was specifically designed to be robust in electromagnetically-noisy environments and can utilize a differential balanced line like RS-485 or a more robust twisted-pair wire. Originally created for automotive purposes, it is also used in many embedded control applications (such as industrial and medical). Bit rates up to 1Mbps are possible at network lengths less than 40 meters. Decreased bit rates allow longer network distances (for example, 125 Kbps at 500 meters).

The Stellaris® CAN controller supports the following features:

- CAN protocol version 2.0 part A/B
- Bit rates up to 1 Mbps
- 32 message objects with individual identifier masks
- Maskable interrupt
- Disable Automatic Retransmission mode for Time-Triggered CAN (TTCAN) applications
- Programmable Loopback mode for self-test operation
- Programmable FIFO mode enables storage of multiple message objects
- Gluelessly attaches to an external CAN interface through the `CANnTX` and `CANnRX` signals

14.1 Block Diagram

Figure 14-1. CAN Controller Block Diagram

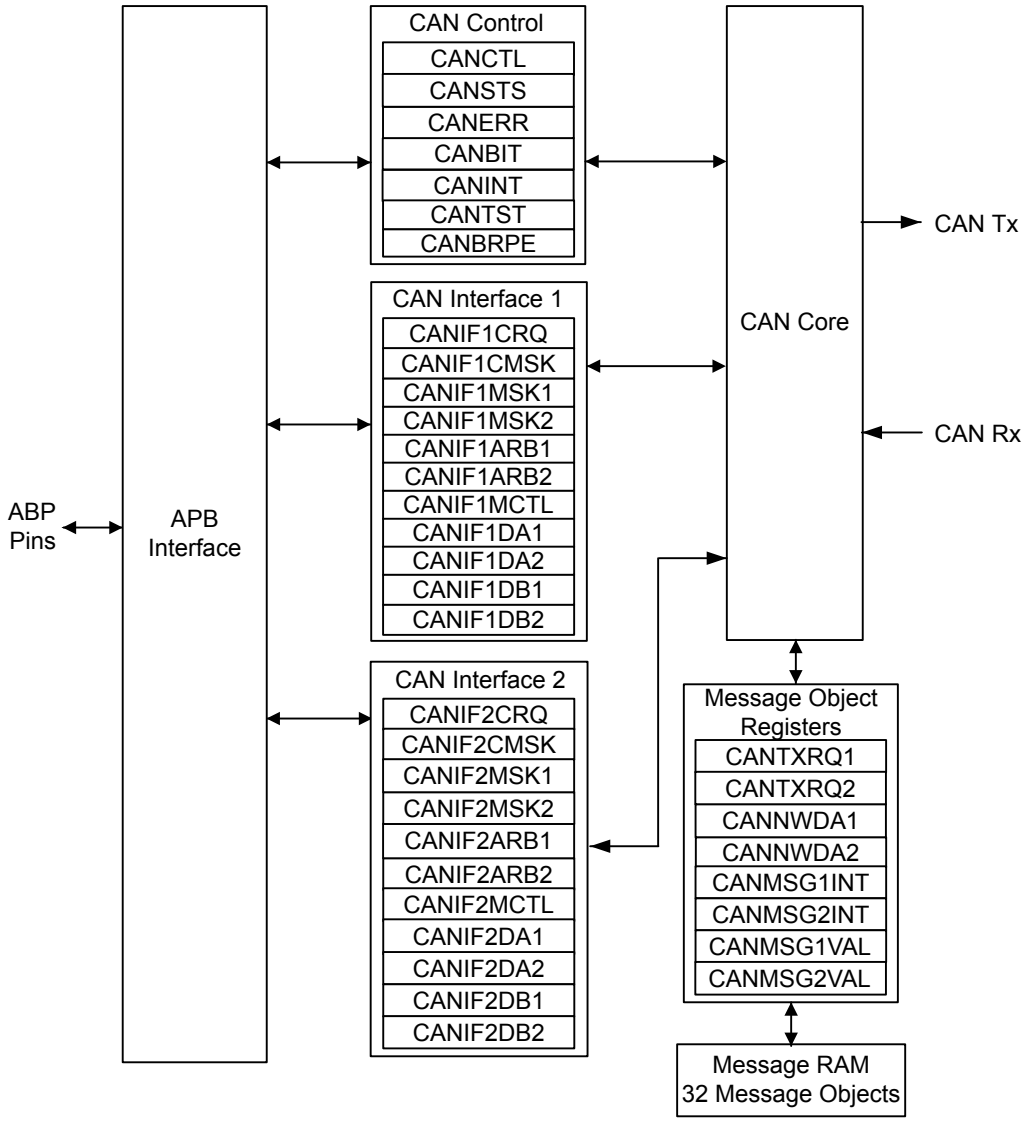

14.2 Signal Description

Table 14-1 on page 507 and Table 14-2 on page 507 list the external signals of the CAN controller and describe the function of each. The CAN controller signals are alternate functions for some GPIO signals and default to be GPIO signals at reset. The column in the table below titled "Pin Assignment" lists the possible GPIO pin placements for the CAN signals. The AFSEL bit in the **GPIO Alternate Function Select (GPIOAFSEL)** register (page 301) should be set to choose the CAN controller function. For more information on configuring GPIOs, see “General-Purpose Input/Outputs (GPIOs)” on page 278.

Table 14-1. Controller Area Network Signals (100LQFP)

Pin Name	Pin Number	Pin Type	Buffer Type[a]	Description
CAN0Rx	10	I	TTL	CAN module 0 receive.
CAN0Tx	11	O	TTL	CAN module 0 transmit.

a. The TTL designation indicates the pin has TTL-compatible voltage levels.

Table 14-2. Controller Area Network Signals (108BGA)

Pin Name	Pin Number	Pin Type	Buffer Type[a]	Description
CAN0Rx	G1	I	TTL	CAN module 0 receive.
CAN0Tx	G2	O	TTL	CAN module 0 transmit.

a. The TTL designation indicates the pin has TTL-compatible voltage levels.

14.3 Functional Description

The Stellaris CAN controller conforms to the CAN protocol version 2.0 (parts A and B). Message transfers that include data, remote, error, and overload frames with an 11-bit identifier (standard) or a 29-bit identifier (extended) are supported. Transfer rates can be programmed up to 1 Mbps.

The CAN module consists of three major parts:

- CAN protocol controller and message handler
- Message memory
- CAN register interface

A data frame contains data for transmission, whereas a remote frame contains no data and is used to request the transmission of a specific message object. The CAN data/remote frame is constructed as shown in Figure 14-2 on page 507.

Figure 14-2. CAN Data/Remote Frame

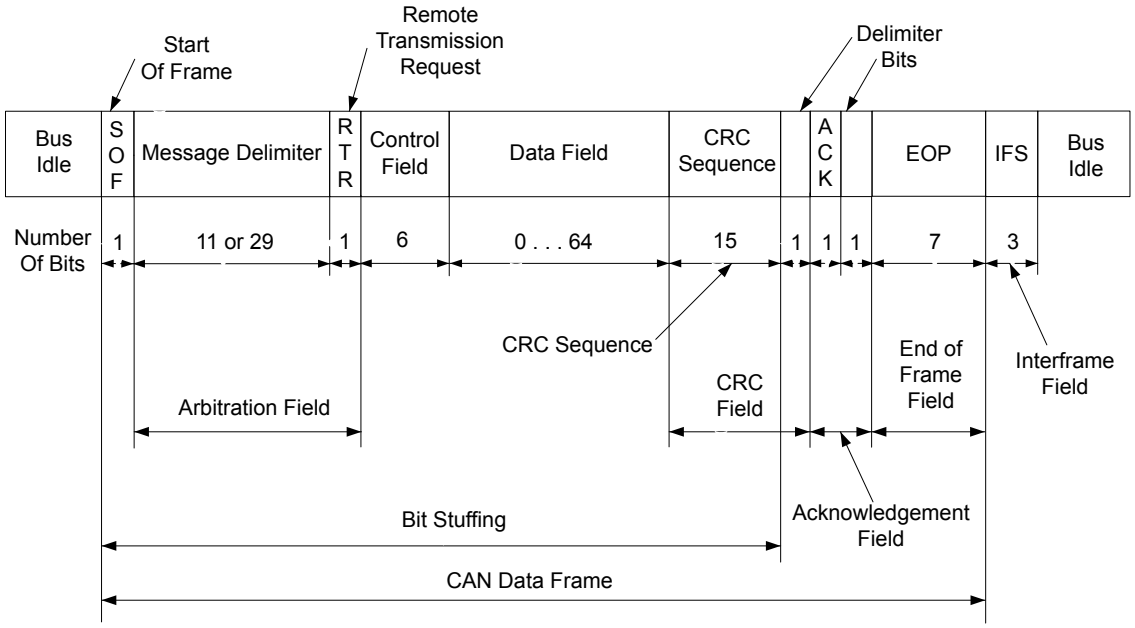

The protocol controller transfers and receives the serial data from the CAN bus and passes the data on to the message handler. The message handler then loads this information into the appropriate message object based on the current filtering and identifiers in the message object memory. The message handler is also responsible for generating interrupts based on events on the CAN bus.

The message object memory is a set of 32 identical memory blocks that hold the current configuration, status, and actual data for each message object. These are accessed via either of the CAN message object register interfaces.

The message memory is not directly accessible in the Stellaris memory map, so the Stellaris CAN controller provides an interface to communicate with the message memory via two CAN interface register sets for communicating with the message objects. As there is no direct access to the message object memory, these two interfaces must be used to read or write to each message object. The two message object interfaces allow parallel access to the CAN controller message objects when multiple objects may have new information that must be processed. In general, one interface is used for transmit data and one for receive data.

14.3.1 Initialization

Software initialization is started by setting the `INIT` bit in the **CAN Control (CANCTL)** register (with software or by a hardware reset) or by going bus-off, which occurs when the transmitter's error counter exceeds a count of 255. While `INIT` is set, all message transfers to and from the CAN bus are stopped and the `CANnTX` signal is held High. Entering the initialization state does not change the configuration of the CAN controller, the message objects, or the error counters. However, some configuration registers are only accessible while in the initialization state.

To initialize the CAN controller, set the **CAN Bit Timing (CANBIT)** register and configure each message object. If a message object is not needed, label it as not valid by clearing the `MSGVAL` bit in the **CAN IFn Arbitration 2 (CANIFnARB2)** register. Otherwise, the whole message object must be initialized, as the fields of the message object may not have valid information, causing unexpected results. Both the `INIT` and `CCE` bits in the **CANCTL** register must be set in order to access the **CANBIT** register and the **CAN Baud Rate Prescaler Extension (CANBRPE)** register to configure the bit timing. To leave the initialization state, the `INIT` bit must be cleared. Afterwards, the internal Bit Stream Processor (BSP) synchronizes itself to the data transfer on the CAN bus by waiting for the occurrence of a sequence of 11 consecutive recessive bits (indicating a bus idle condition) before it takes part in bus activities and starts message transfers. Message object initialization does not require the CAN to be in the initialization state and can be done on the fly. However, message objects should all be configured to particular identifiers or set to not valid before message transfer starts. To change the configuration of a message object during normal operation, clear the `MSGVAL` bit in the **CANIFnARB2** register to indicate that the message object is not valid during the change. When the configuration is completed, set the `MSGVAL` bit again to indicate that the message object is once again valid.

14.3.2 Operation

There are two sets of CAN Interface Registers (**CANIF1x** and **CANIF2x**), which are used to access the message objects in the Message RAM. The CAN controller coordinates transfers to and from the Message RAM to and from the registers. The two sets are independent and identical and can be used to queue transactions. Generally, one interface is used to transmit data and one is used to receive data.

Once the CAN module is initialized and the `INIT` bit in the **CANCTL** register is cleared, the CAN module synchronizes itself to the CAN bus and starts the message transfer. As each message is received, it goes through the message handler's filtering process, and if it passes through the filter, is stored in the message object specified by the `MNUM` bit in the **CAN IFn Command Request**

(CANIFnCRQ) register. The whole message (including all arbitration bits, data-length code, and eight data bytes) is stored in the message object. If the Identifier Mask (the MSK bits in the **CAN IFn Mask 1** and **CAN IFn Mask 2 (CANIFnMSKn)** registers) is used, the arbitration bits that are masked to "don't care" may be overwritten in the message object.

The CPU may read or write each message at any time via the CAN Interface Registers. The message handler guarantees data consistency in case of concurrent accesses.

The transmission of message objects is under the control of the software that is managing the CAN hardware. These can be message objects used for one-time data transfers, or permanent message objects used to respond in a more periodic manner. Permanent message objects have all arbitration and control set up, and only the data bytes are updated. At the start of transmission, the appropriate TXRQST bit in the **CAN Transmission Request n (CANTXRQn)** register and the NEWDAT bit in the **CAN New Data n (CANNWDAn)** register are set. If several transmit messages are assigned to the same message object (when the number of message objects is not sufficient), the whole message object has to be configured before the transmission of this message is requested.

The transmission of any number of message objects may be requested at the same time; they are transmitted according to their internal priority, which is based on the message identifier (MNUM) for the message object, with 1 being the highest priority and 32 being the lowest priority. Messages may be updated or set to not valid any time, even when their requested transmission is still pending. The old data is discarded when a message is updated before its pending transmission has started. Depending on the configuration of the message object, the transmission of a message may be requested autonomously by the reception of a remote frame with a matching identifier.

Transmission can be automatically started by the reception of a matching remote frame. To enable this mode, set the RMTEN bit in the **CAN IFn Message Control (CANIFnMCTL)** register. A matching received remote frame causes the TXRQST bit to be set and the message object automatically transfers its data or generates an interrupt indicating a remote frame was requested. This can be strictly a single message identifier, or it can be a range of values specified in the message object. The CAN mask registers, **CANIFnMSKn**, configure which groups of frames are identified as remote frame requests. The UMASK bit in the **CANIFnMCTL** register enables the MSK bits in the **CANIFnMSKn** register to filter which frames are identified as a remote frame request. The MXTD bit in the **CANIFnMSK2** register should be set if a remote frame request is expected to be triggered by 29-bit extended identifiers.

14.3.3 Transmitting Message Objects

If the internal transmit shift register of the CAN module is ready for loading, and if there is no data transfer occurring between the CAN Interface Registers and message RAM, the valid message object with the highest priority that has a pending transmission request is loaded into the transmit shift register by the message handler and the transmission is started. The message object's NEWDAT bit in the **CANNWDAn** register is cleared. After a successful transmission, and if no new data was written to the message object since the start of the transmission, the TXRQST bit in the **CANTXRQn** register is cleared. If the CAN controller is set up to interrupt upon a successful transmission of a message object, (the TXIE bit in the **CAN IFn Message Control (CANIFnMCTL)** register is set), the INTPND bit in the **CANIFnMCTL** register is set after a successful transmission. If the CAN module has lost the arbitration or if an error occurred during the transmission, the message is re-transmitted as soon as the CAN bus is free again. If, meanwhile, the transmission of a message with higher priority has been requested, the messages are transmitted in the order of their priority.

14.3.4 Configuring a Transmit Message Object

The following steps illustrate how to configure a transmit message object.

1. In the **CAN IFn Command Mask (CANIFnCMASK)** register:
   - Set the WRNRD bit to specify a write to the **CANIFnCMASK** register; specify whether to transfer the IDMASK, DIR, and MXTD of the message object into the **CAN IFn** registers using the MASK bit
   - Specify whether to transfer the ID, DIR, XTD, and MSGVAL of the message object into the interface registers using the ARB bit
   - Specify whether to transfer the control bits into the interface registers using the CONTROL bit
   - Specify whether to clear the INTPND bit in the **CANIFnMCTL** register using the CLRINTPND bit
   - Specify whether to clear the NEWDAT bit in the **CANNWDAn** register using the NEWDAT bit
   - Specify which bits to transfer using the DATAA and DATAB bits
2. In the **CANIFnMSK1** register, use the MSK[15:0] bits to specify which of the bits in the 29-bit or 11-bit message identifier are used for acceptance filtering. Note that MSK[15:0] in this register are used for bits [15:0] of the 29-bit message identifier and are not used for an 11-bit identifier. A value of 0x00 enables all messages to pass through the acceptance filtering. Also note that in order for these bits to be used for acceptance filtering, they must be enabled by setting the UMASK bit in the **CANIFnMCTL** register.
3. In the **CANIFnMSK2** register, use the MSK[12:0] bits to specify which of the bits in the 29-bit or 11-bit message identifier are used for acceptance filtering. Note that MSK[12:0] are used for bits [28:16] of the 29-bit message identifier; whereas MSK[12:2] are used for bits [10:0] of the 11-bit message identifier. Use the MXTD and MDIR bits to specify whether to use XTD and DIR for acceptance filtering. A value of 0x00 enables all messages to pass through the acceptance filtering. Also note that in order for these bits to be used for acceptance filtering, they must be enabled by setting the UMASK bit in the **CANIFnMCTL** register.
4. For a 29-bit identifier, configure ID[15:0] in the **CANIFnARB1** register to are used for bits [15:0] of the message identifier and ID[12:0] in the **CANIFnARB2** register to are used for bits [28:16] of the message identifier. Set the XTD bit to indicate an extended identifier; set the DIR bit to indicate transmit; and set the MSGVAL bit to indicate that the message object is valid.
5. For an 11-bit identifier, disregard the **CANIFnARB1** register and configure ID[12:2] in the **CANIFnARB2** register to are used for bits [10:0] of the message identifier. Clear the XTD bit to indicate a standard identifier; set the DIR bit to indicate transmit; and set the MSGVAL bit to indicate that the message object is valid.
6. In the **CANIFnMCTL** register:
   - Optionally set the UMASK bit to enable the mask (MSK, MXTD, and MDIR specified in the **CANIFnMSK1** and **CANIFnMSK2** registers) for acceptance filtering
   - Optionally set the TXIE bit to enable the INTPND bit to be set after a successful transmission
   - Optionally set the RMTEN bit to enable the TXRQST bit to be set upon the reception of a matching remote frame allowing automatic transmission

- Set the EOB bit for a single message object;
- Set the DLC[3:0] field to specify the size of the data frame. Take care during this configuration not to set the NEWDAT, MSGLST, INTPND or TXRQST bits.

7. Load the data to be transmitted into the CAN IFn Data **(CANIFnDA1, CANIFnDA2, CANIFnDB1, CANIFnDB2)** or **(CANIFnDATAA and CANIFnDATAB)** registers. Byte 0 of the CAN data frame is stored in DATA[7:0] in the **CANIFnDA1** register.
8. Program the number of the message object to be transmitted in the MNUM field in the **CAN IFn Command Request (CANIFnCRQ)** register.
9. When everything is properly configured, set the TXRQST bit in the **CANIFnMCTL** register. Once this bit is set, the message object is available to be transmitted, depending on priority and bus availability. Note that setting the RMTEN bit in the **CANIFnMCTL** register can also start message transmission if a matching remote frame has been received.

14.3.5 Updating a Transmit Message Object

The CPU may update the data bytes of a Transmit Message Object any time via the CAN Interface Registers and neither the MSGVAL bit in the **CANIFnARB2** register nor the TXRQST bits in the **CANIFnMCTL** register have to be cleared before the update.

Even if only some of the data bytes are to be updated, all four bytes of the corresponding **CANIFnDAn**/**CANIFnDBn** register have to be valid before the content of that register is transferred to the message object. Either the CPU must write all four bytes into the **CANIFnDAn**/**CANIFnDBn** register or the message object is transferred to the **CANIFnDAn**/**CANIFnDBn** register before the CPU writes the new data bytes.

In order to only update the data in a message object, the WRNRD, DATAA and DATAB bits in the **CANIFnMSKn** register are set, followed by writing the updated data into **CANIFnDA1**, **CANIFnDA2**, **CANIFnDB1**, and **CANIFnDB2** registers, and then the number of the message object is written to the MNUM field in the **CAN IFn Command Request (CANIFnCRQ)** register. To begin transmission of the new data as soon as possible, set the TXRQST bit in the **CANIFnMSKn** register.

To prevent the clearing of the TXRQST bit in the **CANIFnMCTL** register at the end of a transmission that may already be in progress while the data is updated, the NEWDAT and TXRQST bits have to be set at the same time in the **CANIFnMCTL** register. When these bits are set at the same time, NEWDAT is cleared as soon as the new transmission has started.

14.3.6 Accepting Received Message Objects

When the arbitration and control field (the ID and XTD bits in the **CANIFnARB2** and the RMTEN and DLC[3:0] bits of the **CANIFnMCTL** register) of an incoming message is completely shifted into the CAN controller, the message handling capability of the controller starts scanning the message RAM for a matching valid message object. To scan the message RAM for a matching message object, the controller uses the acceptance filtering programmed through the mask bits in the **CANIFnMSKn** register and enabled using the UMASK bit in the **CANIFnMCTL** register. Each valid message object, starting with object 1, is compared with the incoming message to locate a matching message object in the message RAM. If a match occurs, the scanning is stopped and the message handler proceeds depending on whether it is a data frame or remote frame that was received.

14.3.7 Receiving a Data Frame

The message handler stores the message from the CAN controller receive shift register into the matching message object in the message RAM. The data bytes, all arbitration bits, and the DLC bits

are all stored into the corresponding message object. In this manner, the data bytes are connected with the identifier even if arbitration masks are used. The NEWDAT bit of the **CANIFnMCTL** register is set to indicate that new data has been received. The CPU should clear this bit when it reads the message object to indicate to the controller that the message has been received, and the buffer is free to receive more messages. If the CAN controller receives a message and the NEWDAT bit is already set, the MSGLST bit in the **CANIFnMCTL** register is set to indicate that the previous data was lost. If the system requires an interrupt upon successful reception of a frame, the RXIE bit of the **CANIFnMCTL** register should be set. In this case, the INTPND bit of the same register is set, causing the **CANINT** register to point to the message object that just received a message. The TXRQST bit of this message object should be cleared to prevent the transmission of a remote frame.

14.3.8 Receiving a Remote Frame

A remote frame contains no data, but instead specifies which object should be transmitted. When a remote frame is received, three different configurations of the matching message object have to be considered:

Configuration in CANIFnMCTL	Description
■ DIR = 1 (direction = transmit); programmed in the **CANIFnARB2** register ■ RMTEN = 1 (set the TXRQST bit of the **CANIFnMCTL** register at reception of the frame to enable transmission) ■ UMASK = 1 or 0	At the reception of a matching remote frame, the TXRQST bit of this message object is set. The rest of the message object remains unchanged, and the controller automatically transfers the data in the message object as soon as possible.
■ DIR = 1 (direction = transmit); programmed in the **CANIFnARB2** register ■ RMTEN = 0 (do not change the TXRQST bit of the **CANIFnMCTL** register at reception of the frame) ■ UMASK = 0 (ignore mask in the **CANIFnMSKn** register)	At the reception of a matching remote frame, the TXRQST bit of this message object remains unchanged, and the remote frame is ignored. This remote frame is disabled, the data is not transferred and there is no indication that the remote frame ever happened.
■ DIR = 1 (direction = transmit); programmed in the **CANIFnARB2** register ■ RMTEN = 0 (do not change the TXRQST bit of the **CANIFnMCTL** register at reception of the frame) ■ UMASK = 1 (use mask (MSK, MXTD, and MDIR in the **CANIFnMSKn** register) for acceptance filtering)	At the reception of a matching remote frame, the TXRQST bit of this message object is cleared. The arbitration and control field (ID + XTD + RMTEN + DLC) from the shift register is stored into the message object in the message RAM and the NEWDAT bit of this message object is set. The data field of the message object remains unchanged; the remote frame is treated similar to a received data frame. This is useful for a remote data request from another CAN device for which the Stellaris controller does not have readily available data. The software must fill the data and answer the frame manually.

14.3.9 Receive/Transmit Priority

The receive/transmit priority for the message objects is controlled by the message number. Message object 1 has the highest priority, while message object 32 has the lowest priority. If more than one transmission request is pending, the message objects are transmitted in order based on the message object with the lowest message number. This should not be confused with the message identifier as that priority is enforced by the CAN bus. This means that if message object 1 and message object 2 both have valid messages that need to be transmitted, message object 1 will always be transmitted first regardless of the message identifier in the message object itself.

14.3.10 Configuring a Receive Message Object

The following steps illustrate how to configure a receive message object.

1. Program the **CAN IFn Command Mask (CANIFnCMASK)** register as described in the "Configuring a Transmit Message Object" on page 509 section, except that the `WRNRD` bit is set to specify a write to the message RAM.

2. Program the **CANIFnMSK1**and **CANIFnMSK2** registers as described in the "Configuring a Transmit Message Object" on page 509 section to configure which bits are used for acceptance filtering. Note that in order for these bits to be used for acceptance filtering, they must be enabled by setting the `UMASK` bit in the **CANIFnMCTL** register.

3. In the **CANIFnMSK2** register, use the `MSK[12:0]` bits to specify which of the bits in the 29-bit or 11-bit message identifier are used for acceptance filtering. Note that `MSK[12:0]` are used for bits [28:16] of the 29-bit message identifier; whereas `MSK[12:2]` are used for bits [10:0] of the 11-bit message identifier. Use the `MXTD` and `MDIR` bits to specify whether to use `XTD` and `DIR` for acceptance filtering. A value of 0x00 enables all messages to pass through the acceptance filtering. Also note that in order for these bits to be used for acceptance filtering, they must be enabled by setting the `UMASK` bit in the **CANIFnMCTL** register.

4. Program the **CANIFnARB1** and **CANIFnARB2** registers as described in the "Configuring a Transmit Message Object" on page 509 section to program `XTD` and `ID` bits for the message identifier to be received; set the `MSGVAL` bit to indicate a valid message; and clear the `DIR` bit to specify receive.

5. In the **CANIFnMCTL** register:

   - Optionally set the `UMASK` bit to enable the mask (`MSK`, `MXTD`, and `MDIR` specified in the **CANIFnMSK1** and **CANIFnMSK2** registers) for acceptance filtering
   - Optionally set the `RXIE` bit to enable the `INTPND` bit to be set after a successful reception
   - Clear the `RMTEN` bit to leave the `TXRQST` bit unchanged
   - Set the `EOB` bit for a single message object
   - Set the `DLC[3:0]` field to specify the size of the data frame

   Take care during this configuration not to set the `NEWDAT`, `MSGLST`, `INTPND` or `TXRQST` bits.

6. Program the number of the message object to be received in the `MNUM` field in the **CAN IFn Command Request (CANIFnCRQ)** register. Reception of the message object begins as soon as a matching frame is available on the CAN bus.

When the message handler stores a data frame in the message object, it stores the received Data Length Code and eight data bytes in the **CANIFnDA1**, **CANIFnDA2**, **CANIFnDB1**, and **CANIFnDB2** register. Byte 0 of the CAN data frame is stored in `DATA[7:0]` in the **CANIFnDA1** register. If the Data Length Code is less than 8, the remaining bytes of the message object are overwritten by unspecified values.

The CAN mask registers can be used to allow groups of data frames to be received by a message object. The CAN mask registers, **CANIFnMSKn**, configure which groups of frames are received by a message object. The `UMASK` bit in the **CANIFnMCTL** register enables the `MSK` bits in the

CANIFnMSKn register to filter which frames are received. The MXTD bit in the **CANIFnMSK2** register should be set if only 29-bit extended identifiers are expected by this message object.

14.3.11 Handling of Received Message Objects

The CPU may read a received message any time via the CAN Interface registers because the data consistency is guaranteed by the message handler state machine.

Typically, the CPU first writes 0x007F to the **CANIFnCMSK** register and then writes the number of the message object to the **CANIFnCRQ** register. That combination transfers the whole received message from the message RAM into the Message Buffer registers (**CANIFnMSKn**, **CANIFnARBn**, and **CANIFnMCTL**). Additionally, the NEWDAT and INTPND bits are cleared in the message RAM, acknowledging that the message has been read and clearing the pending interrupt generated by this message object.

If the message object uses masks for acceptance filtering, the **CANIFnARBn** registers show the full, unmasked ID for the received message.

The NEWDAT bit in the **CANIFnMCTL** register shows whether a new message has been received since the last time this message object was read. The MSGLST bit in the **CANIFnMCTL** register shows whether more than one message has been received since the last time this message object was read. MSGLST is not automatically cleared, and should be cleared by software after reading its status.

Using a remote frame, the CPU may request new data from another CAN node on the CAN bus. Setting the TXRQST bit of a receive object causes the transmission of a remote frame with the receive object's identifier. This remote frame triggers the other CAN node to start the transmission of the matching data frame. If the matching data frame is received before the remote frame could be transmitted, the TXRQST bit is automatically reset. This prevents the possible loss of data when the other device on the CAN bus has already transmitted the data slightly earlier than expected.

14.3.11.1 Configuration of a FIFO Buffer

With the exception of the EOB bit in the **CANIFnMCTL** register, the configuration of receive message objects belonging to a FIFO buffer is the same as the configuration of a single receive message object (see “Configuring a Receive Message Object” on page 513). To concatenate two or more message objects into a FIFO buffer, the identifiers and masks (if used) of these message objects have to be programmed to matching values. Due to the implicit priority of the message objects, the message object with the lowest message object number is the first message object in a FIFO buffer. The EOB bit of all message objects of a FIFO buffer except the last one must be cleared. The EOB bit of the last message object of a FIFO buffer is set, indicating it is the last entry in the buffer.

14.3.11.2 Reception of Messages with FIFO Buffers

Received messages with identifiers matching to a FIFO buffer are stored starting with the message object with the lowest message number. When a message is stored into a message object of a FIFO buffer, the NEWDAT of the **CANIFnMCTL** register bit of this message object is set. By setting NEWDAT while EOB is clear, the message object is locked and cannot be written to by the message handler until the CPU has cleared the NEWDAT bit. Messages are stored into a FIFO buffer until the last message object of this FIFO buffer is reached. If none of the preceding message objects has been released by clearing the NEWDAT bit, all further messages for this FIFO buffer will be written into the last message object of the FIFO buffer and therefore overwrite previous messages.

14.3.11.3 Reading from a FIFO Buffer

When the CPU transfers the contents of a message object from a FIFO buffer by writing its number to the **CANIFnCRQ**, the `TXRQST` and `CLRINTPND` bits in the **CANIFnCMSK** register should be set such that the `NEWDAT` and `INTPEND` bits in the **CANIFnMCTL** register are cleared after the read. The values of these bits in the **CANIFnMCTL** register always reflect the status of the message object before the bits are cleared. To assure the correct function of a FIFO buffer, the CPU should read out the message objects starting with the message object with the lowest message number. When reading from the FIFO buffer, the user should be aware that a new received message is placed in the message object with the lowest message number for which the `NEWDAT` bit of the **CANIFnMCTL** register. As a result, the order of the received messages in the FIFO is not guaranteed. Figure 14-3 on page 516 shows how a set of message objects which are concatenated to a FIFO Buffer can be handled by the CPU.

Figure 14-3. Message Objects in a FIFO Buffer

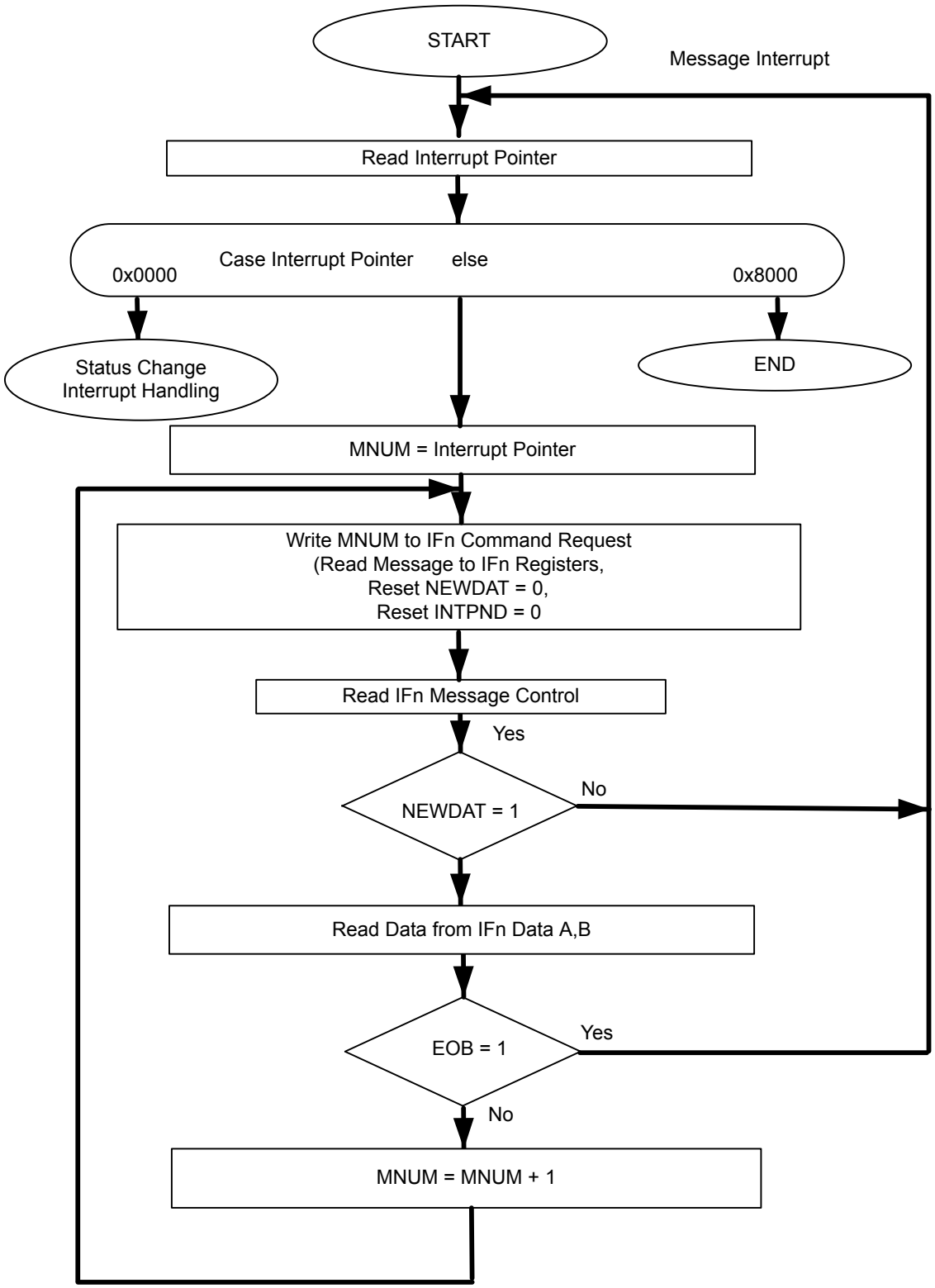

14.3.12 Handling of Interrupts

If several interrupts are pending, the **CAN Interrupt (CANINT)** register points to the pending interrupt with the highest priority, disregarding their chronological order. The status interrupt has the highest priority. Among the message interrupts, the message object's interrupt with the lowest message number has the highest priority. A message interrupt is cleared by clearing the message object's `INTPND` bit in the **CANIFnMCTL** register or by reading the **CAN Status (CANSTS)** register. The status Interrupt is cleared by reading the **CANSTS** register.

The interrupt identifier `INTID` in the **CANINT** register indicates the cause of the interrupt. When no interrupt is pending, the register reads as 0x0000. If the value of the `INTID` field is different from 0, then there is an interrupt pending. If the `IE` bit is set in the **CANCTL** register, the interrupt line to the CPU is active. The interrupt line remains active until the `INTID` field is 0, meaning that all interrupt sources have been cleared (the cause of the interrupt is reset), or until `IE` is cleared, which disables interrupts from the CAN controller.

The `INTID` field of the **CANINT** register points to the pending message interrupt with the highest interrupt priority. The `SIE` bit in the **CANCTL** register controls whether a change of the `RXOK`, `TXOK`, and `LEC` bits in the **CANSTS** register can cause an interrupt. The `EIE` bit in the **CANCTL**register controls whether a change of the `BOFF` and `EWARN` bits in the **CANSTS** can cause an interrupt. The `IE` bit in the **CANCTL** controls whether any interrupt from the CAN controller actually generates an interrupt to the microcontroller's interrupt controller. The **CANINT** register is updated even when the `IE` bit in the **CANCTL** register is clear, but the interrupt will not be indicated to the CPU.

A value of 0x8000 in the **CANINT** register indicates that an interrupt is pending because the CAN module has updated, but not necessarily changed, the **CANSTS** , indicating that either an error or status interrupt has been generated. A write access to the **CANSTS** register can clear the `RXOK`, `TXOK`, and `LEC` bits in that same register; however, the only way to clear the source of a status interrupt is to read the **CANSTS** register.

There are two ways to determine the source of an interrupt during interrupt handling. The first is to read the `INTID` bit in the **CANINT** register to determine the highest priority interrupt that is pending, and the second is to read the **CAN Message Interrupt Pending (CANMSGnINT)** register to see all of the message objects that have pending interrupts.

An interrupt service routine reading the message that is the source of the interrupt may read the message and clear the message object's `INTPND` bit at the same time by setting the `CLRINTPND` bit in the **CANIFnCMSK** register. Once the `INTPND` bit has been cleared, the **CANINT** register contains the message number for the next message object with a pending interrupt.

14.3.13 Test Mode

A Test Mode is provided, which allows various diagnostics to be performed. Test Mode is entered by setting the `TEST` bit **CANCTL** register. Once in Test Mode, the `TX[1:0]`, `LBACK`, `SILENT` and `BASIC` bits in the **CAN Test (CANTST)** register can be used to put the CAN controller into the various diagnostic modes. The `RX` bit in the **CANTST** register allows monitoring of the `CANnRX` signal. All **CANTST** register functions are disabled when the `TEST` bit is cleared.

14.3.13.1 Silent Mode

Silent Mode can be used to analyze the traffic on a CAN bus without affecting it by the transmission of dominant bits (Acknowledge Bits, Error Frames). The CAN Controller is put in Silent Mode setting the `SILENT` bit in the **CANTST** register. In Silent Mode, the CAN controller is able to receive valid data frames and valid remote frames, but it sends only recessive bits on the CAN bus and it cannot start a transmission. If the CAN Controller is required to send a dominant bit (ACK bit, overload flag,

or active error flag), the bit is rerouted internally so that the CAN Controller monitors this dominant bit, although the CAN bus remains in recessive state.

14.3.13.2 Loopback Mode

Loopback mode is useful for self-test functions. In Loopback Mode, the CAN Controller internally routes the CANnTX signal on to the CANnRX signal and treats its own transmitted messages as received messages and stores them (if they pass acceptance filtering) into the message buffer. The CAN Controller is put in Loopback Mode by setting the LBACK bit in the **CANTST** register. To be independent from external stimulation, the CAN Controller ignores acknowledge errors (a recessive bit sampled in the acknowledge slot of a data/remote frame) in Loopback Mode. The actual value of the CANnRX signal is disregarded by the CAN Controller. The transmitted messages can be monitored on the CANnTX signal.

14.3.13.3 Loopback Combined with Silent Mode

Loopback Mode and Silent Mode can be combined to allow the CAN Controller to be tested without affecting a running CAN system connected to the CANnTX and CANnRX signals. In this mode, the CANnRX signal is disconnected from the CAN Controller and the CANnTX signal is held recessive. This mode is enabled by setting both the LBACK and SILENT bits in the **CANTST** register.

14.3.13.4 Basic Mode

Basic Mode allows the CAN Controller to be operated without the Message RAM. In Basic Mode, The CANIF1 registers are used as the transmit buffer. The transmission of the contents of the IF1 registers is requested by setting the BUSY bit of the **CANIF1CRQ** register. The CANIF1 registers are locked while the BUSY bit is set. The BUSY bit indicates that a transmission is pending. As soon the CAN bus is idle, the CANIF1 registers are loaded into the shift register of the CAN Controller and transmission is started. When the transmission has completed, the BUSY bit is cleared and the locked CANIF1 registers are released. A pending transmission can be aborted at any time by clearing the BUSY bit in the **CANIF1CRQ** register while the CANIF1 registers are locked. If the CPU has cleared the BUSY bit, a possible retransmission in case of lost arbitration or an error is disabled.

The CANIF2 Registers are used as a receive buffer. After the reception of a message, the contents of the shift register is stored into the CANIF2 registers, without any acceptance filtering. Additionally, the actual contents of the shift register can be monitored during the message transfer. Each time a read message object is initiated by setting the BUSY bit of the **CANIF2CRQ** register, the contents of the shift register are stored into the CANIF2 registers.

In Basic Mode, all message-object-related control and status bits and of the control bits of the **CANIFnCMSK** registers are not evaluated. The message number of the **CANIFnCRQ** registers is also not evaluated. In the **CANIF2MCTL** register, the NEWDAT and MSGLST bits retain their function, the DLC[3:0] field shows the received DLC, the other control bits are cleared.

Basic Mode is enabled by setting the BASIC bit in the **CANTST** register.

14.3.13.5 Transmit Control

Software can directly override control of the CANnTX signal in four different ways.

- CANnTX is controlled by the CAN Controller
- The sample point is driven on the CANnTX signal to monitor the bit timing
- CANnTX drives a low value

- CANnTX drives a high value

The last two functions, combined with the readable CAN receive pin CANnRX, can be used to check the physical layer of the CAN bus.

The Transmit Control function is enabled by programming the TX[1:0] field in the **CANTST** register. The three test functions for the CANnTX signal interfere with all CAN protocol functions. TX[1:0] must be cleared when CAN message transfer or Loopback Mode, Silent Mode, or Basic Mode are selected.

14.3.14 Bit Timing Configuration Error Considerations

Even if minor errors in the configuration of the CAN bit timing do not result in immediate failure, the performance of a CAN network can be reduced significantly. In many cases, the CAN bit synchronization amends a faulty configuration of the CAN bit timing to such a degree that only occasionally an error frame is generated. In the case of arbitration, however, when two or more CAN nodes simultaneously try to transmit a frame, a misplaced sample point may cause one of the transmitters to become error passive. The analysis of such sporadic errors requires a detailed knowledge of the CAN bit synchronization inside a CAN node and of the CAN nodes' interaction on the CAN bus.

14.3.15 Bit Time and Bit Rate

The CAN system supports bit rates in the range of lower than 1 Kbps up to 1000 Kbps. Each member of the CAN network has its own clock generator. The timing parameter of the bit time can be configured individually for each CAN node, creating a common bit rate even though the CAN nodes' oscillator periods may be different.

Because of small variations in frequency caused by changes in temperature or voltage and by deteriorating components, these oscillators are not absolutely stable. As long as the variations remain inside a specific oscillator's tolerance range, the CAN nodes are able to compensate for the different bit rates by periodically resynchronizing to the bit stream.

According to the CAN specification, the bit time is divided into four segments (see Figure 14-4 on page 520): the Synchronization Segment, the Propagation Time Segment, the Phase Buffer Segment 1, and the Phase Buffer Segment 2. Each segment consists of a specific, programmable number of time quanta (see Table 14-3 on page 520). The length of the time quantum (t_q), which is the basic time unit of the bit time, is defined by the CAN controller's input clock (fsys) and the Baud Rate Prescaler (BRP):

t_q = BRP / fsys

The fsys input clock is 8 MHz.

The Synchronization Segment Sync is that part of the bit time where edges of the CAN bus level are expected to occur; the distance between an edge that occurs outside of Sync and the Sync is called the phase error of that edge.

The Propagation Time Segment Prop is intended to compensate for the physical delay times within the CAN network.

The Phase Buffer Segments Phase1 and Phase2 surround the Sample Point.

The (Re-)Synchronization Jump Width (SJW) defines how far a resynchronization may move the Sample Point inside the limits defined by the Phase Buffer Segments to compensate for edge phase errors.

A given bit rate may be met by different bit-time configurations, but for the proper function of the CAN network, the physical delay times and the oscillator's tolerance range have to be considered.

Figure 14-4. CAN Bit Time

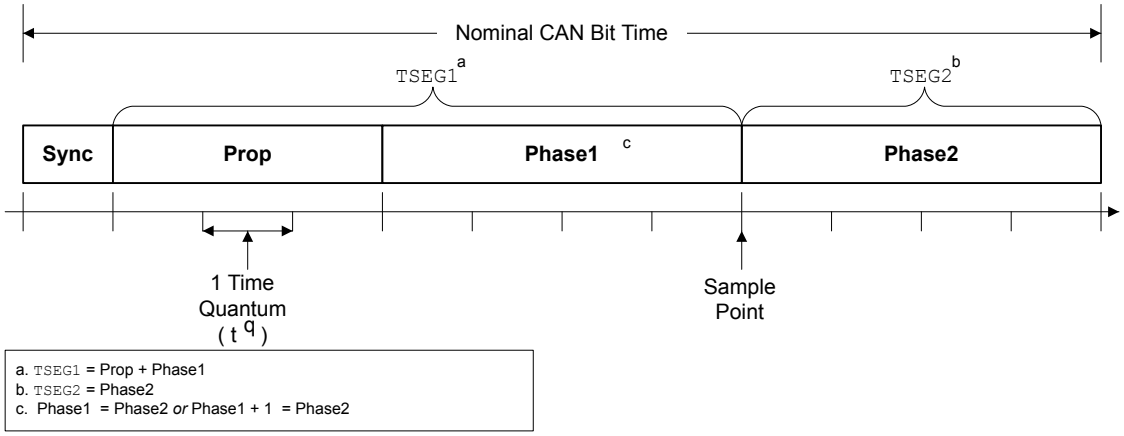

Table 14-3. CAN Protocol Ranges[a]

Parameter	Range	Remark
BRP	[1 .. 64]	Defines the length of the time quantum t_q. The **CANBRPE** register can be used to extend the range to 1024.
Sync	1 t_q	Fixed length, synchronization of bus input to system clock
Prop	[1 .. 8] t_q	Compensates for the physical delay times
Phase1	[1 .. 8] t_q	May be lengthened temporarily by synchronization
Phase2	[1 .. 8] t_q	May be shortened temporarily by synchronization
SJW	[1 .. 4] t_q	May not be longer than either Phase Buffer Segment

a. This table describes the minimum programmable ranges required by the CAN protocol.

The bit timing configuration is programmed in two register bytes in the **CANBIT** register. In the **CANBIT** register, the four components TSEG2, TSEG1, SJW, and BRP have to be programmed to a numerical value that is one less than its functional value; so instead of values in the range of [1..n], values in the range of [0..n-1] are programmed. That way, for example, SJW (functional range of [1..4]) is represented by only two bits in the SJW bit field. Table 14-4 shows the relationship between the **CANBIT** register values and the parameters.

Table 14-4. CANBIT Register Values

CANBIT Register Field	Setting
TSEG2	Phase2 - 1
TSEG1	Prop + Phase1 - 1
SJW	SJW - 1
BRP	BRP

Therefore, the length of the bit time is (programmed values):

$[TSEG1 + TSEG2 + 3] \times t_q$

or (functional values):

[Sync + Prop + Phase1 + Phase2] × t_q

The data in the **CANBIT** register is the configuration input of the CAN protocol controller. The baud rate prescaler (configured by the `BRP` field) defines the length of the time quantum, the basic time unit of the bit time; the bit timing logic (configured by `TSEG1`, `TSEG2`, and `SJW`) defines the number of time quanta in the bit time.

The processing of the bit time, the calculation of the position of the sample point, and occasional synchronizations are controlled by the CAN controller and are evaluated once per time quantum.

The CAN controller translates messages to and from frames. In addition, the controller generates and discards the enclosing fixed format bits, inserts and extracts stuff bits, calculates and checks the CRC code, performs the error management, and decides which type of synchronization is to be used. The bit value is received or transmitted at the sample point. The information processing time (IPT) is the time after the sample point needed to calculate the next bit to be transmitted on the CAN bus. The IPT includes any of the following: retrieving the next data bit, handling a CRC bit, determining if bit stuffing is required, generating an error flag or simply going idle.

The IPT is application-specific but may not be longer than 2 t_q; the CAN's IPT is 0 t_q. Its length is the lower limit of the programmed length of Phase2. In case of synchronization, Phase2 may be shortened to a value less than IPT, which does not affect bus timing.

14.3.16 Calculating the Bit Timing Parameters

Usually, the calculation of the bit timing configuration starts with a required bit rate or bit time. The resulting bit time (1/bit rate) must be an integer multiple of the system clock period.

The bit time may consist of 4 to 25 time quanta. Several combinations may lead to the required bit time, allowing iterations of the following steps.

The first part of the bit time to be defined is Prop. Its length depends on the delay times measured in the system. A maximum bus length as well as a maximum node delay has to be defined for expandable CAN bus systems. The resulting time for Prop is converted into time quanta (rounded up to the nearest integer multiple of t_q).

Sync is 1 t_q long (fixed), which leaves (bit time - Prop - 1) t_q for the two Phase Buffer Segments. If the number of remaining t_q is even, the Phase Buffer Segments have the same length, that is, Phase2 = Phase1, else Phase2 = Phase1 + 1.

The minimum nominal length of Phase2 has to be regarded as well. Phase2 may not be shorter than the CAN controller's Information Processing Time, which is, depending on the actual implementation, in the range of [0..2] t_q.

The length of the synchronization jump width is set to the least of 4, Phase1 or Phase2.

The oscillator tolerance range necessary for the resulting configuration is calculated by the formula given below:

$$(1 - df) \times fnom \leq fosc \leq (1 + df) \times fnom$$

where:

- `df` = Maximum tolerance of oscillator frequency
- `fosc` = Actual oscillator frequency

- `fnom` = Nominal oscillator frequency

Maximum frequency tolerance must take into account the following formulas:

$$df \leq \frac{(Phase_seg1, Phase_seg2)\min}{2 \times (13 \times tbit - Phase_Seg2)}$$

$$df\max = 2 \times df \times fnom$$

where:

- `Phase1` and `Phase2` are from Table 14-3 on page 520
- `tbit` = Bit Time
- `dfmax` = Maximum difference between two oscillators

If more than one configuration is possible, that configuration allowing the highest oscillator tolerance range should be chosen.

CAN nodes with different system clocks require different configurations to come to the same bit rate. The calculation of the propagation time in the CAN network, based on the nodes with the longest delay times, is done once for the whole network.

The CAN system's oscillator tolerance range is limited by the node with the lowest tolerance range.

The calculation may show that bus length or bit rate have to be decreased or that the oscillator frequencies' stability has to be increased in order to find a protocol-compliant configuration of the CAN bit timing.

14.3.16.1 Example for Bit Timing at High Baud Rate

In this example, the frequency of CAN clock is 8 MHz, and the bit rate is 1 Mbps.

```
bit time = 1 µs = n * tq = 8 * tq
tq = 125 ns
tq = (Baud rate Prescaler)/CAN Clock
Baud rate Prescaler = tq * CAN Clock
Baud rate Prescaler = 125E-9 * 8E6 = 1

tSync = 1 * tq = 125 ns               \\fixed at 1 time quanta

delay of bus driver 50 ns
delay of receiver circuit 30 ns
delay of bus line (40m) 220 ns
tProp 375 ns = 3 * tq                 \\375 is next integer multiple of tq

bit time = tSync + tTSeg1 + tTSeg2 = 8 * tq
bit time = tSync + tProp + tPhase 1 + tPhase2
tPhase 1 + tPhase2 = bit time - tSync - tProp
tPhase 1 + tPhase2 = (8 * tq) - (1 * tq) - (3 * tq)
tPhase 1 + tPhase2 = 4 * tq
```

```
tPhase1 = 2 * tq
tPhase2 = 2 * tq                        \\tPhase2 = tPhase1

tTSeg1 = tProp + tPhase1
tTSeg1 = (3 * tq) + (2 * tq)
tTSeg1 = 5 * tq
tTSeg2 = tPhase2
tTSeg2 = (Information Processing Time + 2) × tq
tTSeg2 = 2 * tq                         \\Assumes IPT=0

tSJW = 2 * tq                           \\Least of 4, Phase1 and Phase2 = 1
```

In the above example, the bit field values for the **CANBIT** register are:

TSEG2	= TSeg2 -1 = 2-1 = 1
TSEG1	= TSeg1 -1 = 5-1 = 4
SJW	= SJW -1 = 2-1 = 1
BRP	= Baud rate prescaler - 1 = 1-1 =0

The final value programmed into the **CANBIT** register = 0x1440.

14.3.16.2 Example for Bit Timing at Low Baud Rate

In this example, the frequency of the CAN clock is 8 MHz, and the bit rate is 100 Kbps.

```
bit time = 10 µs = n * tq = 10 * tq
tq = 1 µs
tq = (Baud rate Prescaler)/CAN Clock
Baud rate Prescaler = tq * CAN Clock
Baud rate Prescaler = 1E-6 * 8E6 = 8

tSync = 1 * tq = 1 µs                \\fixed at 1 time quanta

delay of bus driver 200 ns
delay of receiver circuit 80 ns
delay of bus line (40m) 220 ns
tProp 1 µs = 1 * tq                  \\1 µs is next integer multiple of tq

bit time = tSync + tTSeg1 + tTSeg2 = 10 * tq
bit time = tSync + tProp + tPhase 1 + tPhase2
tPhase 1 + tPhase2 = bit time - tSync - tProp
tPhase 1 + tPhase2 = (10 * tq) - (1 * tq)  - (1 * tq)
tPhase 1 + tPhase2 = 8 * tq
tPhase1 = 4 * tq
```

```
tPhase2 = 4 * tq                        \\tPhase2 = tPhase1

tTSeg1 = tProp + tPhase1
tTSeg1 = (1 * tq) + (4 * tq)
tTSeg1 = 5 * tq
tTSeg2 = tPhase2
tTSeg2 = (Information Processing Time + 4) * tq
tTSeg2 = 4 * tq                        \\Assumes IPT=0

tSJW = 4 * tq                          \\Least of 4, Phase1, and Phase2
```

TSEG2	= TSeg2 -1 = 4-1 = 3
TSEG1	= TSeg1 -1 = 5-1 = 4
SJW	= SJW -1 = 4-1 = 3
BRP	= Baud rate prescaler - 1 = 8-1 = 7

The final value programmed into the **CANBIT** register = 0x34C7.

14.4 Register Map

Table 14-5 on page 524 lists the registers. All addresses given are relative to the CAN base address of:

- CAN0: 0x4004.0000

Note that the CAN module clock must be enabled before the registers can be programmed (see page 206). There must be a delay of 3 system clocks after the CAN module clock is enabled before any CAN module registers are accessed.

Table 14-5. CAN Register Map

Offset	Name	Type	Reset	Description	See page
0x000	CANCTL	R/W	0x0000.0001	CAN Control	527
0x004	CANSTS	R/W	0x0000.0000	CAN Status	529
0x008	CANERR	RO	0x0000.0000	CAN Error Counter	531
0x00C	CANBIT	R/W	0x0000.2301	CAN Bit Timing	532
0x010	CANINT	RO	0x0000.0000	CAN Interrupt	533
0x014	CANTST	R/W	0x0000.0000	CAN Test	534
0x018	CANBRPE	R/W	0x0000.0000	CAN Baud Rate Prescaler Extension	536

Table 14-5. CAN Register Map *(continued)*

Offset	Name	Type	Reset	Description	See page
0x020	CANIF1CRQ	R/W	0x0000.0001	CAN IF1 Command Request	537
0x024	CANIF1CMSK	R/W	0x0000.0000	CAN IF1 Command Mask	538
0x028	CANIF1MSK1	R/W	0x0000.FFFF	CAN IF1 Mask 1	540
0x02C	CANIF1MSK2	R/W	0x0000.FFFF	CAN IF1 Mask 2	541
0x030	CANIF1ARB1	R/W	0x0000.0000	CAN IF1 Arbitration 1	542
0x034	CANIF1ARB2	R/W	0x0000.0000	CAN IF1 Arbitration 2	543
0x038	CANIF1MCTL	R/W	0x0000.0000	CAN IF1 Message Control	545
0x03C	CANIF1DA1	R/W	0x0000.0000	CAN IF1 Data A1	547
0x040	CANIF1DA2	R/W	0x0000.0000	CAN IF1 Data A2	547
0x044	CANIF1DB1	R/W	0x0000.0000	CAN IF1 Data B1	547
0x048	CANIF1DB2	R/W	0x0000.0000	CAN IF1 Data B2	547
0x080	CANIF2CRQ	R/W	0x0000.0001	CAN IF2 Command Request	537
0x084	CANIF2CMSK	R/W	0x0000.0000	CAN IF2 Command Mask	538
0x088	CANIF2MSK1	R/W	0x0000.FFFF	CAN IF2 Mask 1	540
0x08C	CANIF2MSK2	R/W	0x0000.FFFF	CAN IF2 Mask 2	541
0x090	CANIF2ARB1	R/W	0x0000.0000	CAN IF2 Arbitration 1	542
0x094	CANIF2ARB2	R/W	0x0000.0000	CAN IF2 Arbitration 2	543
0x098	CANIF2MCTL	R/W	0x0000.0000	CAN IF2 Message Control	545
0x09C	CANIF2DA1	R/W	0x0000.0000	CAN IF2 Data A1	547
0x0A0	CANIF2DA2	R/W	0x0000.0000	CAN IF2 Data A2	547
0x0A4	CANIF2DB1	R/W	0x0000.0000	CAN IF2 Data B1	547
0x0A8	CANIF2DB2	R/W	0x0000.0000	CAN IF2 Data B2	547
0x100	CANTXRQ1	RO	0x0000.0000	CAN Transmission Request 1	548
0x104	CANTXRQ2	RO	0x0000.0000	CAN Transmission Request 2	548
0x120	CANNWDA1	RO	0x0000.0000	CAN New Data 1	549
0x124	CANNWDA2	RO	0x0000.0000	CAN New Data 2	549
0x140	CANMSG1INT	RO	0x0000.0000	CAN Message 1 Interrupt Pending	550
0x144	CANMSG2INT	RO	0x0000.0000	CAN Message 2 Interrupt Pending	550
0x160	CANMSG1VAL	RO	0x0000.0000	CAN Message 1 Valid	551
0x164	CANMSG2VAL	RO	0x0000.0000	CAN Message 2 Valid	551

14.5 CAN Register Descriptions

The remainder of this section lists and describes the CAN registers, in numerical order by address offset. There are two sets of Interface Registers that are used to access the Message Objects in the Message RAM: **CANIF1x** and **CANIF2x**. The function of the two sets are identical and are used to queue transactions.

Register 1: CAN Control (CANCTL), offset 0x000

This control register initializes the module and enables test mode and interrupts.

The bus-off recovery sequence (see CAN Specification Rev. 2.0) cannot be shortened by setting or clearing `INIT`. If the device goes bus-off, it sets `INIT`, stopping all bus activities. Once `INIT` has been cleared by the CPU, the device then waits for 129 occurrences of Bus Idle (129 * 11 consecutive High bits) before resuming normal operations. At the end of the bus-off recovery sequence, the Error Management Counters are reset.

During the waiting time after `INIT` is cleared, each time a sequence of 11 High bits has been monitored, a BITERROR0 code is written to the **CANSTS** register (the `LEC` field = 0x5), enabling the CPU to readily check whether the CAN bus is stuck Low or continuously disturbed, and to monitor the proceeding of the bus-off recovery sequence.

CAN Control (CANCTL)

CAN0 base: 0x4004.0000
Offset 0x000
Type R/W, reset 0x0000.0001

	31	30	29	28	27	26	25	24	23	22	21	20	19	18	17	16
	reserved															
Type	RO	RO	RO	RO	RO	RO	RO	RO	RO	RO	RO	RO	RO	RO	RO	RO
Reset	0	0	0	0	0	0	0	0	0	0	0	0	0	0	0	0

	15	14	13	12	11	10	9	8	7	6	5	4	3	2	1	0
	reserved								TEST	CCE	DAR	reserved	EIE	SIE	IE	INIT
Type	RO	RO	RO	RO	RO	RO	RO	RO	R/W	R/W	R/W	RO	R/W	R/W	R/W	R/W
Reset	0	0	0	0	0	0	0	0	0	0	0	0	0	0	0	1

Bit/Field	Name	Type	Reset	Description
31:8	reserved	RO	0x0000.00	Software should not rely on the value of a reserved bit. To provide compatibility with future products, the value of a reserved bit should be preserved across a read-modify-write operation.
7	TEST	R/W	0	Test Mode Enable 0: Normal operation 1: Test mode
6	CCE	R/W	0	Configuration Change Enable 0: Do not allow write access to the **CANBIT** register. 1: Allow write access to the **CANBIT** register if the `INIT` bit is 1.
5	DAR	R/W	0	Disable Automatic-Retransmission 0: Auto-retransmission of disturbed messages is enabled. 1: Auto-retransmission is disabled.
4	reserved	RO	0	Software should not rely on the value of a reserved bit. To provide compatibility with future products, the value of a reserved bit should be preserved across a read-modify-write operation.
3	EIE	R/W	0	Error Interrupt Enable 0: Disabled. No error status interrupt is generated. 1: Enabled. A change in the `BOFF` or `EWARN` bits in the **CANSTS** register generates an interrupt.

Bit/Field	Name	Type	Reset	Description
2	SIE	R/W	0	Status Interrupt Enable 0: Disabled. No status interrupt is generated. 1: Enabled. An interrupt is generated when a message has successfully been transmitted or received, or a CAN bus error has been detected. A change in the TX0K, RX0K or LEC bits in the **CANSTS** register generates an interrupt.
1	IE	R/W	0	CAN Interrupt Enable 0: Interrupts disabled. 1: Interrupts enabled.
0	INIT	R/W	1	Initialization 0: Normal operation. 1: Initialization started.

Register 2: CAN Status (CANSTS), offset 0x004

Important: This register is read-sensitive. See the register description for details.

The status register contains information for interrupt servicing such as Bus-Off, error count threshold, and error types.

The LEC field holds the code that indicates the type of the last error to occur on the CAN bus. This field is cleared when a message has been transferred (reception or transmission) without error. The unused error code 7 may be written by the CPU to manually set this field to an invalid error so that it can be checked for a change later.

An error interrupt is generated by the BOFF and EWARN bits and a status interrupt is generated by the RXOK, TXOK, and LEC bits, if the corresponding enable bits in the **CAN Control (CANCTL)** register are set. A change of the EPASS bit or a write to the RXOK, TXOK, or LEC bits does not generate an interrupt.

Reading the **CAN Status (CANSTS)** register clears the **CAN Interrupt (CANINT)** register, if it is pending.

CAN Status (CANSTS)

CAN0 base: 0x4004.0000
Offset 0x004
Type R/W, reset 0x0000.0000

	31	30	29	28	27	26	25	24	23	22	21	20	19	18	17	16
	reserved															
Type	RO	RO	RO	RO	RO	RO	RO	RO	RO	RO	RO	RO	RO	RO	RO	RO
Reset	0	0	0	0	0	0	0	0	0	0	0	0	0	0	0	0

	15	14	13	12	11	10	9	8	7	6	5	4	3	2	1	0
	reserved								BOFF	EWARN	EPASS	RXOK	TXOK	LEC		
Type	RO	RO	RO	RO	RO	RO	RO	RO	RO	RO	RO	R/W	R/W	R/W	R/W	R/W
Reset	0	0	0	0	0	0	0	0	0	0	0	0	0	0	0	0

Bit/Field	Name	Type	Reset	Description
31:8	reserved	RO	0x0000.00	Software should not rely on the value of a reserved bit. To provide compatibility with future products, the value of a reserved bit should be preserved across a read-modify-write operation.
7	BOFF	RO	0	Bus-Off Status 0: CAN controller is not in bus-off state. 1: CAN controller is in bus-off state.
6	EWARN	RO	0	Warning Status 0: Both error counters are below the error warning limit of 96. 1: At least one of the error counters has reached the error warning limit of 96.
5	EPASS	RO	0	Error Passive 0: The CAN module is in the Error Active state, that is, the receive or transmit error count is less than or equal to 127. 1: The CAN module is in the Error Passive state, that is, the receive or transmit error count is greater than 127.

Bit/Field	Name	Type	Reset	Description
4	RXOK	R/W	0	Received a Message Successfully 0: Since this bit was last cleared, no message has been successfully received. 1: Since this bit was last cleared, a message has been successfully received, independent of the result of the acceptance filtering. This bit is never cleared by the CAN module.
3	TXOK	R/W	0	Transmitted a Message Successfully 0: Since this bit was last cleared, no message has been successfully transmitted. 1: Since this bit was last cleared, a message has been successfully transmitted error-free and acknowledged by at least one other node. This bit is never cleared by the CAN module.
2:0	LEC	R/W	0x0	Last Error Code This is the type of the last error to occur on the CAN bus.

Value	Definition
0x0	No Error
0x1	Stuff Error More than 5 equal bits in a sequence have occurred in a part of a received message where this is not allowed.
0x2	Format Error A fixed format part of the received frame has the wrong format.
0x3	ACK Error The message transmitted was not acknowledged by another node.
0x4	Bit 1 Error When a message is transmitted, the CAN controller monitors the data lines to detect any conflicts. When the arbitration field is transmitted, data conflicts are a part of the arbitration protocol. When other frame fields are transmitted, data conflicts are considered errors. A Bit 1 Error indicates that the device wanted to send a High level (logical 1) but the monitored bus value was Low (logical 0).
0x5	Bit 0 Error A Bit 0 Error indicates that the device wanted to send a Low level (logical 0), but the monitored bus value was High (logical 1). During bus-off recovery, this status is set each time a sequence of 11 High bits has been monitored. This enables the CPU to monitor the proceeding of the bus-off recovery sequence without any disturbances to the bus.
0x6	CRC Error The CRC checksum was incorrect in the received message, indicating that the calculated value received did not match the calculated CRC of the data.
0x7	No Event When the LEC bit shows this value, no CAN bus event was detected since the CPU wrote this value to LEC.

Register 3: CAN Error Counter (CANERR), offset 0x008

This register contains the error counter values, which can be used to analyze the cause of an error.

CAN Error Counter (CANERR)

CAN0 base: 0x4004.0000
Offset 0x008
Type RO, reset 0x0000.0000

	31	30	29	28	27	26	25	24	23	22	21	20	19	18	17	16
	reserved															
Type	RO	RO	RO	RO	RO	RO	RO	RO	RO	RO	RO	RO	RO	RO	RO	RO
Reset	0	0	0	0	0	0	0	0	0	0	0	0	0	0	0	0

	15	14	13	12	11	10	9	8	7	6	5	4	3	2	1	0
	RP	REC							TEC							
Type	RO	RO	RO	RO	RO	RO	RO	RO	RO	RO	RO	RO	RO	RO	RO	RO
Reset	0	0	0	0	0	0	0	0	0	0	0	0	0	0	0	0

Bit/Field	Name	Type	Reset	Description
31:16	reserved	RO	0x0000	Software should not rely on the value of a reserved bit. To provide compatibility with future products, the value of a reserved bit should be preserved across a read-modify-write operation.
15	RP	RO	0	Received Error Passive 0: The Receive Error counter is below the Error Passive level (127 or less). 1: The Receive Error counter has reached the Error Passive level (128 or greater).
14:8	REC	RO	0x00	Receive Error Counter State of the receiver error counter (0 to 127).
7:0	TEC	RO	0x00	Transmit Error Counter State of the transmit error counter (0 to 255).

Register 4: CAN Bit Timing (CANBIT), offset 0x00C

This register is used to program the bit width and bit quantum. Values are programmed to the system clock frequency. This register is write-enabled by setting the `CCE` and `INIT` bits in the **CANCTL** register. See “Bit Time and Bit Rate” on page 519 for more information.

CAN Bit Timing (CANBIT)

CAN0 base: 0x4004.0000
Offset 0x00C
Type R/W, reset 0x0000.2301

	31	30	29	28	27	26	25	24	23	22	21	20	19	18	17	16
	reserved															
Type	RO	RO	RO	RO	RO	RO	RO	RO	RO	RO	RO	RO	RO	RO	RO	RO
Reset	0	0	0	0	0	0	0	0	0	0	0	0	0	0	0	0

	15	14	13	12	11	10	9	8	7	6	5	4	3	2	1	0
	reserved	TSEG2			TSEG1				SJW		BRP					
Type	RO	R/W	R/W	R/W	R/W	R/W	R/W	R/W	R/W	R/W	R/W	R/W	R/W	R/W	R/W	R/W
Reset	0	0	1	0	0	0	1	1	0	0	0	0	0	0	0	1

Bit/Field	Name	Type	Reset	Description
31:15	reserved	RO	0x0000	Software should not rely on the value of a reserved bit. To provide compatibility with future products, the value of a reserved bit should be preserved across a read-modify-write operation.
14:12	TSEG2	R/W	0x2	Time Segment after Sample Point 0x00-0x07: The actual interpretation by the hardware of this value is such that one more than the value programmed here is used. So, for example, a reset value of 0x2 defines that there is 3 (2+1) bit time quanta defined for `Phase_Seg2` (see Figure 14-4 on page 520). The bit time quanta is defined by the `BRP` field.
11:8	TSEG1	R/W	0x3	Time Segment Before Sample Point 0x00-0x0F: The actual interpretation by the hardware of this value is such that one more than the value programmed here is used. So, for example, the reset value of 0x3 defines that there is 4 (3+1) bit time quanta defined for `Phase_Seg1` (see Figure 14-4 on page 520). The bit time quanta is define by the `BRP` field.
7:6	SJW	R/W	0x0	(Re)Synchronization Jump Width 0x00-0x03: The actual interpretation by the hardware of this value is such that one more than the value programmed here is used. During the start of frame (SOF), if the CAN controller detects a phase error (misalignment), it can adjust the length of `TSEG2` or `TSEG1` by the value in `SJW`. So the reset value of 0 adjusts the length by 1 bit time quanta.
5:0	BRP	R/W	0x1	Baud Rate Prescaler The value by which the oscillator frequency is divided for generating the bit time quanta. The bit time is built up from a multiple of this quantum. 0x00-0x03F: The actual interpretation by the hardware of this value is such that one more than the value programmed here is used. `BRP` defines the number of CAN clock periods that make up 1 bit time quanta, so the reset value is 2 bit time quanta (1+1). The **CANBRPE** register can be used to further divide the bit time.

Register 5: CAN Interrupt (CANINT), offset 0x010

This register indicates the source of the interrupt.

If several interrupts are pending, the **CAN Interrupt (CANINT)** register points to the pending interrupt with the highest priority, disregarding the order in which the interrupts occurred. An interrupt remains pending until the CPU has cleared it. If the `INTID` field is not 0x0000 (the default) and the `IE` bit in the **CANCTL** register is set, the interrupt is active. The interrupt line remains active until the `INTID` field is cleared by reading the **CANSTS** register, or until the `IE` bit in the **CANCTL** register is cleared.

Note: Reading the **CAN Status (CANSTS)** register clears the **CAN Interrupt (CANINT)** register, if it is pending.

CAN Interrupt (CANINT)

CAN0 base: 0x4004.0000
Offset 0x010
Type RO, reset 0x0000.0000

	31	30	29	28	27	26	25	24	23	22	21	20	19	18	17	16
	reserved															
Type	RO	RO	RO	RO	RO	RO	RO	RO	RO	RO	RO	RO	RO	RO	RO	RO
Reset	0	0	0	0	0	0	0	0	0	0	0	0	0	0	0	0

	15	14	13	12	11	10	9	8	7	6	5	4	3	2	1	0
	INTID															
Type	RO	RO	RO	RO	RO	RO	RO	RO	RO	RO	RO	RO	RO	RO	RO	RO
Reset	0	0	0	0	0	0	0	0	0	0	0	0	0	0	0	0

Bit/Field	Name	Type	Reset	Description
31:16	reserved	RO	0x0000	Software should not rely on the value of a reserved bit. To provide compatibility with future products, the value of a reserved bit should be preserved across a read-modify-write operation.
15:0	INTID	RO	0x0000	Interrupt Identifier The number in this field indicates the source of the interrupt.

Value	Definition
0x0000	No interrupt pending
0x0001-0x0020	Number of the message object that caused the interrupt
0x0021-0x7FFF	Reserved
0x8000	Status Interrupt
0x8001-0xFFFF	Reserved

Register 6: CAN Test (CANTST), offset 0x014

This is the test mode register for self-test and external pin access. It is write-enabled by setting the TEST bit in the **CANCTL** register. Different test functions may be combined, however, CAN transfers will be affected if the TX bits in this register are not zero.

CAN Test (CANTST)

CAN0 base: 0x4004.0000
Offset 0x014
Type R/W, reset 0x0000.0000

	31	30	29	28	27	26	25	24	23	22	21	20	19	18	17	16
	reserved															
Type	RO	RO	RO	RO	RO	RO	RO	RO	RO	RO	RO	RO	RO	RO	RO	RO
Reset	0	0	0	0	0	0	0	0	0	0	0	0	0	0	0	0

	15	14	13	12	11	10	9	8	7	6	5	4	3	2	1	0
	reserved								RX	TX		LBACK	SILENT	BASIC	reserved	
Type	RO	RO	RO	RO	RO	RO	RO	RO	RO	R/W	R/W	R/W	R/W	R/W	RO	RO
Reset	0	0	0	0	0	0	0	0	0	0	0	0	0	0	0	0

Bit/Field	Name	Type	Reset	Description
31:8	reserved	RO	0x0000.00	Software should not rely on the value of a reserved bit. To provide compatibility with future products, the value of a reserved bit should be preserved across a read-modify-write operation.
7	RX	RO	0	Receive Observation Displays the value on the CANnRx pin.
6:5	TX	R/W	0x0	Transmit Control Overrides control of the CANnTx pin. Value — Description 0x0 — CAN Module Control CANnTx is controlled by the CAN module; default operation 0x1 — Sample Point The sample point is driven on the CANnTx signal. This mode is useful to monitor bit timing. 0x2 — Driven Low CANnTx drives a low value. This mode is useful for checking the physical layer of the CAN bus. 0x3 — Driven High CANnTx drives a high value. This mode is useful for checking the physical layer of the CAN bus.
4	LBACK	R/W	0	Loopback Mode 0: Disabled. 1: Enabled. In loopback mode, the data from the transmitter is routed into the receiver. Any data on the receive input is ignored.

Bit/Field	Name	Type	Reset	Description
3	SILENT	R/W	0	Silent Mode Do not transmit data; monitor the bus. Also known as Bus Monitor mode. 0: Disabled. 1: Enabled.
2	BASIC	R/W	0	Basic Mode 0: Disabled. 1: Use **CANIF1** registers as transmit buffer, and use **CANIF2** registers as receive buffer.
1:0	reserved	RO	0x0	Software should not rely on the value of a reserved bit. To provide compatibility with future products, the value of a reserved bit should be preserved across a read-modify-write operation.

Register 7: CAN Baud Rate Prescaler Extension (CANBRPE), offset 0x018

This register is used to further divide the bit time set with the BRP bit in the **CANBIT** register. It is write-enabled by setting the CCE bit in the **CANCTL** register.

CAN Baud Rate Prescaler Extension (CANBRPE)

CAN0 base: 0x4004.0000
Offset 0x018
Type R/W, reset 0x0000.0000

	31	30	29	28	27	26	25	24	23	22	21	20	19	18	17	16
	reserved															
Type	RO	RO	RO	RO	RO	RO	RO	RO	RO	RO	RO	RO	RO	RO	RO	RO
Reset	0	0	0	0	0	0	0	0	0	0	0	0	0	0	0	0

	15	14	13	12	11	10	9	8	7	6	5	4	3	2	1	0
	reserved												BRPE			
Type	RO	RO	RO	RO	RO	RO	RO	RO	RO	RO	RO	RO	R/W	R/W	R/W	R/W
Reset	0	0	0	0	0	0	0	0	0	0	0	0	0	0	0	0

Bit/Field	Name	Type	Reset	Description
31:4	reserved	RO	0x0000.000	Software should not rely on the value of a reserved bit. To provide compatibility with future products, the value of a reserved bit should be preserved across a read-modify-write operation.
3:0	BRPE	R/W	0x0	Baud Rate Prescaler Extension 0x00-0x0F: Extend the BRP bit in the **CANBIT** register to values up to 1023. The actual interpretation by the hardware is one more than the value programmed by BRPE (MSBs) and BRP (LSBs).

Register 8: CAN IF1 Command Request (CANIF1CRQ), offset 0x020

Register 9: CAN IF2 Command Request (CANIF2CRQ), offset 0x080

A message transfer is started as soon as there is a write of the message object number to the `MNUM` field when the `TXRQST` bit in the **CANIF1MCTL** register is set. With this write operation, the `BUSY` bit is automatically set to indicate that a transfer between the CAN Interface Registers and the internal message RAM is in progress. After a wait time of 3 to 6 `CAN_CLK` periods, the transfer between the interface register and the message RAM completes, which then clears the `BUSY` bit.

CAN IF1 Command Request (CANIF1CRQ)

CAN0 base: 0x4004.0000
Offset 0x020
Type R/W, reset 0x0000.0001

	31	30	29	28	27	26	25	24	23	22	21	20	19	18	17	16
	reserved															
Type	RO	RO	RO	RO	RO	RO	RO	RO	RO	RO	RO	RO	RO	RO	RO	RO
Reset	0	0	0	0	0	0	0	0	0	0	0	0	0	0	0	0

	15	14	13	12	11	10	9	8	7	6	5	4	3	2	1	0
	BUSY	reserved									MNUM					
Type	RO	RO	RO	RO	RO	RO	RO	RO	RO	RO	R/W	R/W	R/W	R/W	R/W	R/W
Reset	0	0	0	0	0	0	0	0	0	0	0	0	0	0	0	1

Bit/Field	Name	Type	Reset	Description
31:16	reserved	RO	0x0000	Software should not rely on the value of a reserved bit. To provide compatibility with future products, the value of a reserved bit should be preserved across a read-modify-write operation.
15	BUSY	RO	0	Busy Flag 0: Cleared when read/write action has finished. 1: Set when a write occurs to the message number in this register.
14:6	reserved	RO	0x00	Software should not rely on the value of a reserved bit. To provide compatibility with future products, the value of a reserved bit should be preserved across a read-modify-write operation.
5:0	MNUM	R/W	0x01	Message Number Selects one of the 32 message objects in the message RAM for data transfer. The message objects are numbered from 1 to 32.

Value	Description
0x00	Reserved 0 is not a valid message number; it is interpreted as 0x20, or object 32.
0x01-0x20	Message Number Indicates specified message object 1 to 32.
0x21-0x3F	Reserved Not a valid message number; values are shifted and it is interpreted as 0x01-0x1F.

Register 10: CAN IF1 Command Mask (CANIF1CMSK), offset 0x024

Register 11: CAN IF2 Command Mask (CANIF2CMSK), offset 0x084

Reading the Command Mask registers provides status for various functions. Writing to the Command Mask registers specifies the transfer direction and selects which buffer registers are the source or target of the data transfer.

Note that when a read from the message object buffer occurs when the `WRNRD` bit is clear and the `CLRINTPND` and/or `NEWDAT` bits are set, the interrupt pending and/or new data flags in the message object buffer are cleared.

CAN IF1 Command Mask (CANIF1CMSK)

CAN0 base: 0x4004.0000
Offset 0x024
Type R/W, reset 0x0000.0000

	31	30	29	28	27	26	25	24	23	22	21	20	19	18	17	16
	reserved															
Type	RO	RO	RO	RO	RO	RO	RO	RO	RO	RO	RO	RO	RO	RO	RO	RO
Reset	0	0	0	0	0	0	0	0	0	0	0	0	0	0	0	0

	15	14	13	12	11	10	9	8	7	6	5	4	3	2	1	0
	reserved								WRNRD	MASK	ARB	CONTROL	CLRINTPND	NEWDAT / TXRQST	DATAA	DATAB
Type	RO	RO	RO	RO	RO	RO	RO	RO	R/W	R/W	R/W	R/W	R/W	R/W	R/W	R/W
Reset	0	0	0	0	0	0	0	0	0	0	0	0	0	0	0	0

Bit/Field	Name	Type	Reset	Description
31:8	reserved	RO	0x0000.00	Software should not rely on the value of a reserved bit. To provide compatibility with future products, the value of a reserved bit should be preserved across a read-modify-write operation.
7	WRNRD	R/W	0	Write, Not Read Transfer the message object address specified by the **CAN Command Request (CANIFnCRQ)** register to the CAN message buffer registers. **Note:** Interrupt pending and new data conditions in the message buffer can be cleared by reading from the buffer (`WRNRD` = 0) when the `CLRINTPND` and/or `NEWDAT` bits are set.
6	MASK	R/W	0	Access Mask Bits 0: Mask bits unchanged. 1: Transfer `IDMASK` + `DIR` + `MXTD` of the message object into the Interface registers.
5	ARB	R/W	0	Access Arbitration Bits 0: Arbitration bits unchanged. 1: Transfer `ID` + `DIR` + `XTD` + `MSGVAL` of the message object into the Interface registers.
4	CONTROL	R/W	0	Access Control Bits 0: Control bits unchanged. 1: Transfer control bits from the **CANIFnMCTL** register into the Interface registers.

Bit/Field	Name	Type	Reset	Description
3	CLRINTPND	R/W	0	Clear Interrupt Pending Bit If `WRNRD` is set, this bit controls whether the `INTPND` bit in the **CANIFnMCTL** register is changed. 0: The `INTPND` bit in the message object remains unchanged. 1: The `INTPND` bit is cleared in the message object. If `WRNRD` is clear and this bit is clear, the interrupt pending status is transferred from the message buffer into the **CANIFnMCTL** register. If `WRNRD` is clear and this bit is set, the interrupt pending status is cleared in the message buffer. Note that the value of this bit that is transferred to the **CANIFnMCTL** register always reflects the status of the bits before clearing.
2	NEWDAT / TXRQST	R/W	0	NEWDAT / TXRQST Bit If `WRNRD` is set, this bit can act as a `TXRQST` bit and request a transmission. Note that when this bit is set, the `TXRQST` bit in the **CANIFnMCTL** register is ignored. 0: Transmission is not requested 1: Begin a transmission If `WRNRD` is clear and this bit is clear, the value of the new data status is transferred from the message buffer into the **CANIFnMCTL** register. If `WRNRD` is clear and this bit is set, the new data status is cleared in the message buffer. Note that the value of this bit that is transferred to the **CANIFnMCTL** register always reflects the status of the bits before clearing.
1	DATAA	R/W	0	Access Data Byte 0 to 3 When `WRNRD` = 1: 0: Data bytes 0-3 are unchanged. 1: Transfer data bytes 0-3 in message object to **CANIFnDA1** and **CANIFnDA2**. When `WRNRD` = 0: 0: Data bytes 0-3 are unchanged. 1: Transfer data bytes 0-3 in **CANIFnDA1** and **CANIFnDA2** to the message object.
0	DATAB	R/W	0	Access Data Byte 4 to 7 When `WRNRD` = 1: 0: Data bytes 4-7 are unchanged. 1: Transfer data bytes 4-7 in message object to **CANIFnDB1** and **CANIFnDB2**. When `WRNRD` = 0: 0: Data bytes 4-7 are unchanged. 1: Transfer data bytes 4-7 in **CANIFnDB1** and **CANIFnDB2** to the message object.

Register 12: CAN IF1 Mask 1 (CANIF1MSK1), offset 0x028

Register 13: CAN IF2 Mask 1 (CANIF2MSK1), offset 0x088

The mask information provided in this register accompanies the data (**CANIFnDAn**), arbitration information (**CANIFnARBn**), and control information (**CANIFnMCTL**) to the message object in the message RAM. The mask is used with the `ID` bit in the **CANIFnARBn** register for acceptance filtering. Additional mask information is contained in the **CANIFnMSK2** register.

CAN IF1 Mask 1 (CANIF1MSK1)

CAN0 base: 0x4004.0000
Offset 0x028
Type R/W, reset 0x0000.FFFF

	31	30	29	28	27	26	25	24	23	22	21	20	19	18	17	16
	reserved															
Type	RO	RO	RO	RO	RO	RO	RO	RO	RO	RO	RO	RO	RO	RO	RO	RO
Reset	0	0	0	0	0	0	0	0	0	0	0	0	0	0	0	0

	15	14	13	12	11	10	9	8	7	6	5	4	3	2	1	0
	MSK															
Type	R/W	R/W	R/W	R/W	R/W	R/W	R/W	R/W	R/W	R/W	R/W	R/W	R/W	R/W	R/W	R/W
Reset	1	1	1	1	1	1	1	1	1	1	1	1	1	1	1	1

Bit/Field	Name	Type	Reset	Description
31:16	reserved	RO	0x0000	Software should not rely on the value of a reserved bit. To provide compatibility with future products, the value of a reserved bit should be preserved across a read-modify-write operation.
15:0	MSK	R/W	0xFFFF	Identifier Mask When using a 29-bit identifier, these bits are used for bits [15:0] of the ID. The `MSK` field in the **CANIFnMSK2** register are used for bits [28:16] of the ID. When using an 11-bit identifier, these bits are ignored. 0: The corresponding identifier field (`ID`) in the message object cannot inhibit the match in acceptance filtering. 1: The corresponding identifier field (`ID`) is used for acceptance filtering.

Register 14: CAN IF1 Mask 2 (CANIF1MSK2), offset 0x02C

Register 15: CAN IF2 Mask 2 (CANIF2MSK2), offset 0x08C

This register holds extended mask information that accompanies the **CANIFnMSK1** register.

CAN IF1 Mask 2 (CANIF1MSK2)

CAN0 base: 0x4004.0000
Offset 0x02C
Type R/W, reset 0x0000.FFFF

	31	30	29	28	27	26	25	24	23	22	21	20	19	18	17	16
	reserved															
Type	RO	RO	RO	RO	RO	RO	RO	RO	RO	RO	RO	RO	RO	RO	RO	RO
Reset	0	0	0	0	0	0	0	0	0	0	0	0	0	0	0	0

	15	14	13	12	11	10	9	8	7	6	5	4	3	2	1	0
	MXTD	MDIR	reserved	MSK												
Type	R/W	R/W	RO	R/W	R/W	R/W	R/W	R/W	R/W	R/W	R/W	R/W	R/W	R/W	R/W	R/W
Reset	1	1	1	0	0	0	0	0	1	1	1	1	1	1	1	1

Bit/Field	Name	Type	Reset	Description
31:16	reserved	RO	0x0000	Software should not rely on the value of a reserved bit. To provide compatibility with future products, the value of a reserved bit should be preserved across a read-modify-write operation.
15	MXTD	R/W	0x1	Mask Extended Identifier 0: The extended identifier bit (`XTD` in the **CANIFnARB2** register) has no effect on the acceptance filtering. 1: The extended identifier bit `XTD` is used for acceptance filtering.
14	MDIR	R/W	0x1	Mask Message Direction 0: The message direction bit (`DIR` in the **CANIFnARB2** register) has no effect for acceptance filtering. 1: The message direction bit `DIR` is used for acceptance filtering.
13	reserved	RO	0x1	Software should not rely on the value of a reserved bit. To provide compatibility with future products, the value of a reserved bit should be preserved across a read-modify-write operation.
12:0	MSK	R/W	0xFF	Identifier Mask When using a 29-bit identifier, these bits are used for bits [28:16] of the ID. The `MSK` field in the **CANIFnMSK1** register are used for bits [15:0] of the ID. When using an 11-bit identifier, `MSK[12:2]` are used for bits [10:0] of the ID. 0: The corresponding identifier field (`ID`) in the message object cannot inhibit the match in acceptance filtering. 1: The corresponding identifier field (`ID`) is used for acceptance filtering.

Register 16: CAN IF1 Arbitration 1 (CANIF1ARB1), offset 0x030

Register 17: CAN IF2 Arbitration 1 (CANIF2ARB1), offset 0x090

These registers hold the identifiers for acceptance filtering.

CAN IF1 Arbitration 1 (CANIF1ARB1)

CAN0 base: 0x4004.0000
Offset 0x030
Type R/W, reset 0x0000.0000

	31	30	29	28	27	26	25	24	23	22	21	20	19	18	17	16
	reserved															
Type	RO	RO	RO	RO	RO	RO	RO	RO	RO	RO	RO	RO	RO	RO	RO	RO
Reset	0	0	0	0	0	0	0	0	0	0	0	0	0	0	0	0

	15	14	13	12	11	10	9	8	7	6	5	4	3	2	1	0
	ID															
Type	R/W	R/W	R/W	R/W	R/W	R/W	R/W	R/W	R/W	R/W	R/W	R/W	R/W	R/W	R/W	R/W
Reset	0	0	0	0	0	0	0	0	0	0	0	0	0	0	0	0

Bit/Field	Name	Type	Reset	Description
31:16	reserved	RO	0x0000	Software should not rely on the value of a reserved bit. To provide compatibility with future products, the value of a reserved bit should be preserved across a read-modify-write operation.
15:0	ID	R/W	0x0000	Message Identifier This bit field is used with the `ID` field in the **CANIFnARB2** register to create the message identifier. When using a 29-bit identifier, bits 15:0 of the **CANIFnARB1** register are [15:0] of the ID, while bits 12:0 of the **CANIFnARB2** register are [28:16] of the ID. When using an 11-bit identifier, these bits are not used.

Register 18: CAN IF1 Arbitration 2 (CANIF1ARB2), offset 0x034

Register 19: CAN IF2 Arbitration 2 (CANIF2ARB2), offset 0x094

These registers hold information for acceptance filtering.

CAN IF1 Arbitration 2 (CANIF1ARB2)

CAN0 base: 0x4004.0000
Offset 0x034
Type R/W, reset 0x0000.0000

	31	30	29	28	27	26	25	24	23	22	21	20	19	18	17	16
	reserved															
Type	RO	RO	RO	RO	RO	RO	RO	RO	RO	RO	RO	RO	RO	RO	RO	RO
Reset	0	0	0	0	0	0	0	0	0	0	0	0	0	0	0	0

	15	14	13	12	11	10	9	8	7	6	5	4	3	2	1	0
	MSGVAL	XTD	DIR	ID												
Type	R/W	R/W	R/W	R/W	R/W	R/W	R/W	R/W	R/W	R/W	R/W	R/W	R/W	R/W	R/W	R/W
Reset	0	0	0	0	0	0	0	0	0	0	0	0	0	0	0	0

Bit/Field	Name	Type	Reset	Description
31:16	reserved	RO	0x0000	Software should not rely on the value of a reserved bit. To provide compatibility with future products, the value of a reserved bit should be preserved across a read-modify-write operation.
15	MSGVAL	R/W	0	Message Valid 0: The message object is ignored by the message handler. 1: The message object is configured and ready to be considered by the message handler within the CAN controller. All unused message objects should have this bit cleared during initialization and before clearing the `INIT` bit in the **CANCTL** register. The `MSGVAL` bit must also be cleared before any of the following bits are modified or if the message object is no longer required: the `ID` fields in the **CANIFnARBn** registers, the `XTD` and `DIR` bits in the **CANIFnARB2** register, or the `DLC` field in the **CANIFnMCTL** register.
14	XTD	R/W	0	Extended Identifier 0: An 11-bit Standard Identifier is used for this message object. 1: A 29-bit Extended Identifier is used for this message object.
13	DIR	R/W	0	Message Direction 0: Receive. When the `TXRQST` bit in the **CANIFnMCTL** register is set, a remote frame with the identifier of this message object is received. On reception of a data frame with matching identifier, that message is stored in this message object. 1: Transmit. When the `TXRQST` bit in the **CANIFnMCTL** register is set, the respective message object is transmitted as a data frame. On reception of a remote frame with matching identifier, the `TXRQST` bit of this message object is set (if `RMTEN=1`).

Bit/Field	Name	Type	Reset	Description
12:0	ID	R/W	0x000	Message Identifier This bit field is used with the `ID` field in the **CANIFnARB2** register to create the message identifier. When using a 29-bit identifier, `ID[15:0]` of the **CANIFnARB1** register are [15:0] of the ID, while these bits, `ID[12:0]`, are [28:16] of the ID. When using an 11-bit identifier, `ID[12:2]` are used for bits [10:0] of the ID. The `ID` field in the **CANIFnARB1** register is ignored.

Register 20: CAN IF1 Message Control (CANIF1MCTL), offset 0x038

Register 21: CAN IF2 Message Control (CANIF2MCTL), offset 0x098

This register holds the control information associated with the message object to be sent to the Message RAM.

CAN IF1 Message Control (CANIF1MCTL)

CAN0 base: 0x4004.0000
Offset 0x038
Type R/W, reset 0x0000.0000

	31	30	29	28	27	26	25	24	23	22	21	20	19	18	17	16
	reserved															
Type	RO	RO	RO	RO	RO	RO	RO	RO	RO	RO	RO	RO	RO	RO	RO	RO
Reset	0	0	0	0	0	0	0	0	0	0	0	0	0	0	0	0

	15	14	13	12	11	10	9	8	7	6	5	4	3	2	1	0
	NEWDAT	MSGLST	INTPND	UMASK	TXIE	RXIE	RMTEN	TXRQST	EOB	reserved			DLC			
Type	R/W	R/W	R/W	R/W	R/W	R/W	R/W	R/W	R/W	RO	RO	RO	R/W	R/W	R/W	R/W
Reset	0	0	0	0	0	0	0	0	0	0	0	0	0	0	0	0

Bit/Field	Name	Type	Reset	Description
31:16	reserved	RO	0x0000	Software should not rely on the value of a reserved bit. To provide compatibility with future products, the value of a reserved bit should be preserved across a read-modify-write operation.
15	NEWDAT	R/W	0	New Data 0: No new data has been written into the data portion of this message object by the message handler since the last time this flag was cleared by the CPU. 1: The message handler or the CPU has written new data into the data portion of this message object.
14	MSGLST	R/W	0	Message Lost 0 : No message was lost since the last time this bit was cleared by the CPU. 1: The message handler stored a new message into this object when `NEWDAT` was set; the CPU has lost a message. This bit is only valid for message objects when the `DIR` bit in the **CANIFnARB2** register clear (receive).
13	INTPND	R/W	0	Interrupt Pending 0: This message object is not the source of an interrupt. 1: This message object is the source of an interrupt. The interrupt identifier in the **CANINT** register points to this message object if there is not another interrupt source with a higher priority.
12	UMASK	R/W	0	Use Acceptance Mask 0: Mask ignored. 1: Use mask (`MSK`, `MXTD`, and `MDIR` bits in the **CANIFnMSKn** registers) for acceptance filtering.

Bit/Field	Name	Type	Reset	Description
11	TXIE	R/W	0	Transmit Interrupt Enable 0: The `INTPND` bit in the **CANIFnMCTL** register is unchanged after a successful transmission of a frame. 1: The `INTPND` bit in the **CANIFnMCTL** register is set after a successful transmission of a frame.
10	RXIE	R/W	0	Receive Interrupt Enable 0: The `INTPND` bit in the **CANIFnMCTL** register is unchanged after a successful reception of a frame. 1: The `INTPND` bit in the **CANIFnMCTL** register is set after a successful reception of a frame.
9	RMTEN	R/W	0	Remote Enable 0: At the reception of a remote frame, the `TXRQST` bit in the **CANIFnMCTL** register is left unchanged. 1: At the reception of a remote frame, the `TXRQST` bit in the **CANIFnMCTL** register is set.
8	TXRQST	R/W	0	Transmit Request 0: This message object is not waiting for transmission. 1: The transmission of this message object is requested and is not yet done.
7	EOB	R/W	0	End of Buffer 0: Message object belongs to a FIFO Buffer and is not the last message object of that FIFO Buffer. 1: Single message object or last message object of a FIFO Buffer. This bit is used to concatenate two or more message objects (up to 32) to build a FIFO buffer. For a single message object (thus not belonging to a FIFO buffer), this bit must be set.
6:4	reserved	RO	0x0	Software should not rely on the value of a reserved bit. To provide compatibility with future products, the value of a reserved bit should be preserved across a read-modify-write operation.
3:0	DLC	R/W	0x0	Data Length Code Value — Description 0x0-0x8 — Specifies the number of bytes in the data frame. 0x9-0xF — Defaults to a data frame with 8 bytes. The `DLC` field in the **CANIFnMCTL** register of a message object must be defined the same as in all the corresponding objects with the same identifier at other nodes. When the message handler stores a data frame, it writes `DLC` to the value given by the received message.

Register 22: CAN IF1 Data A1 (CANIF1DA1), offset 0x03C

Register 23: CAN IF1 Data A2 (CANIF1DA2), offset 0x040

Register 24: CAN IF1 Data B1 (CANIF1DB1), offset 0x044

Register 25: CAN IF1 Data B2 (CANIF1DB2), offset 0x048

Register 26: CAN IF2 Data A1 (CANIF2DA1), offset 0x09C

Register 27: CAN IF2 Data A2 (CANIF2DA2), offset 0x0A0

Register 28: CAN IF2 Data B1 (CANIF2DB1), offset 0x0A4

Register 29: CAN IF2 Data B2 (CANIF2DB2), offset 0x0A8

These registers contain the data to be sent or that has been received. In a CAN data frame, data byte 0 is the first byte to be transmitted or received and data byte 7 is the last byte to be transmitted or received. In CAN's serial bit stream, the MSB of each byte is transmitted first.

CAN IF1 Data A1 (CANIF1DA1)

CAN0 base: 0x4004.0000
Offset 0x03C
Type R/W, reset 0x0000.0000

	31	30	29	28	27	26	25	24	23	22	21	20	19	18	17	16
	reserved															
Type	RO	RO	RO	RO	RO	RO	RO	RO	RO	RO	RO	RO	RO	RO	RO	RO
Reset	0	0	0	0	0	0	0	0	0	0	0	0	0	0	0	0

	15	14	13	12	11	10	9	8	7	6	5	4	3	2	1	0
	DATA															
Type	R/W	R/W	R/W	R/W	R/W	R/W	R/W	R/W	R/W	R/W	R/W	R/W	R/W	R/W	R/W	R/W
Reset	0	0	0	0	0	0	0	0	0	0	0	0	0	0	0	0

Bit/Field	Name	Type	Reset	Description
31:16	reserved	RO	0x0000	Software should not rely on the value of a reserved bit. To provide compatibility with future products, the value of a reserved bit should be preserved across a read-modify-write operation.
15:0	DATA	R/W	0x0000	Data The **CANIFnDA1** registers contain data bytes 1 and 0; **CANIFnDA2** data bytes 3 and 2; **CANIFnDB1** data bytes 5 and 4; and **CANIFnDB2** data bytes 7 and 6.

Register 30: CAN Transmission Request 1 (CANTXRQ1), offset 0x100

Register 31: CAN Transmission Request 2 (CANTXRQ2), offset 0x104

The **CANTXRQ1** and **CANTXRQ2** registers hold the TXRQST bits of the 32 message objects. By reading out these bits, the CPU can check which message object has a transmission request pending. The TXRQST bit of a specific message object can be changed by three sources: (1) the CPU via the **CANIFnMCTL** register, (2) the message handler state machine after the reception of a remote frame, or (3) the message handler state machine after a successful transmission.

The **CANTXRQ1** register contains the TXRQST bits of the first 16 message objects in the message RAM; the **CANTXRQ2** register contains the TXRQST bits of the second 16 message objects.

CAN Transmission Request 1 (CANTXRQ1)

CAN0 base: 0x4004.0000
Offset 0x100
Type RO, reset 0x0000.0000

	31	30	29	28	27	26	25	24	23	22	21	20	19	18	17	16
	reserved															
Type	RO	RO	RO	RO	RO	RO	RO	RO	RO	RO	RO	RO	RO	RO	RO	RO
Reset	0	0	0	0	0	0	0	0	0	0	0	0	0	0	0	0

	15	14	13	12	11	10	9	8	7	6	5	4	3	2	1	0
	TXRQST															
Type	RO	RO	RO	RO	RO	RO	RO	RO	RO	RO	RO	RO	RO	RO	RO	RO
Reset	0	0	0	0	0	0	0	0	0	0	0	0	0	0	0	0

Bit/Field	Name	Type	Reset	Description
31:16	reserved	RO	0x0000	Software should not rely on the value of a reserved bit. To provide compatibility with future products, the value of a reserved bit should be preserved across a read-modify-write operation.
15:0	TXRQST	RO	0x0000	Transmission Request Bits 0: The corresponding message object is not waiting for transmission. 1: The transmission of the corresponding message object is requested and is not yet done.

Register 32: CAN New Data 1 (CANNWDA1), offset 0x120

Register 33: CAN New Data 2 (CANNWDA2), offset 0x124

The **CANNWDA1** and **CANNWDA2** registers hold the NEWDAT bits of the 32 message objects. By reading these bits, the CPU can check which message object has its data portion updated. The NEWDAT bit of a specific message object can be changed by three sources: (1) the CPU via the **CANIFnMCTL** register, (2) the message handler state machine after the reception of a data frame, or (3) the message handler state machine after a successful transmission.

The **CANNWDA1** register contains the NEWDAT bits of the first 16 message objects in the message RAM; the **CANNWDA2** register contains the NEWDAT bits of the second 16 message objects.

CAN New Data 1 (CANNWDA1)

CAN0 base: 0x4004.0000
Offset 0x120
Type RO, reset 0x0000.0000

	31	30	29	28	27	26	25	24	23	22	21	20	19	18	17	16
	reserved															
Type	RO	RO	RO	RO	RO	RO	RO	RO	RO	RO	RO	RO	RO	RO	RO	RO
Reset	0	0	0	0	0	0	0	0	0	0	0	0	0	0	0	0

	15	14	13	12	11	10	9	8	7	6	5	4	3	2	1	0
	NEWDAT															
Type	RO	RO	RO	RO	RO	RO	RO	RO	RO	RO	RO	RO	RO	RO	RO	RO
Reset	0	0	0	0	0	0	0	0	0	0	0	0	0	0	0	0

Bit/Field	Name	Type	Reset	Description
31:16	reserved	RO	0x0000	Software should not rely on the value of a reserved bit. To provide compatibility with future products, the value of a reserved bit should be preserved across a read-modify-write operation.
15:0	NEWDAT	RO	0x0000	New Data Bits 0: No new data has been written into the data portion of the corresponding message object by the message handler since the last time this flag was cleared by the CPU. 1: The message handler or the CPU has written new data into the data portion of the corresponding message object.

Register 34: CAN Message 1 Interrupt Pending (CANMSG1INT), offset 0x140

Register 35: CAN Message 2 Interrupt Pending (CANMSG2INT), offset 0x144

The **CANMSG1INT** and **CANMSG2INT** registers hold the `INTPND` bits of the 32 message objects. By reading these bits, the CPU can check which message object has an interrupt pending. The `INTPND` bit of a specific message object can be changed through two sources: (1) the CPU via the **CANIFnMCTL** register, or (2) the message handler state machine after the reception or transmission of a frame.

This field is also encoded in the **CANINT** register.

The **CANMSG1INT** register contains the `INTPND` bits of the first 16 message objects in the message RAM; the **CANMSG2INT** register contains the `INTPND` bits of the second 16 message objects.

CAN Message 1 Interrupt Pending (CANMSG1INT)

CAN0 base: 0x4004.0000
Offset 0x140
Type RO, reset 0x0000.0000

	31	30	29	28	27	26	25	24	23	22	21	20	19	18	17	16
	reserved															
Type	RO	RO	RO	RO	RO	RO	RO	RO	RO	RO	RO	RO	RO	RO	RO	RO
Reset	0	0	0	0	0	0	0	0	0	0	0	0	0	0	0	0

	15	14	13	12	11	10	9	8	7	6	5	4	3	2	1	0
	INTPND															
Type	RO	RO	RO	RO	RO	RO	RO	RO	RO	RO	RO	RO	RO	RO	RO	RO
Reset	0	0	0	0	0	0	0	0	0	0	0	0	0	0	0	0

Bit/Field	Name	Type	Reset	Description
31:16	reserved	RO	0x0000	Software should not rely on the value of a reserved bit. To provide compatibility with future products, the value of a reserved bit should be preserved across a read-modify-write operation.
15:0	INTPND	RO	0x0000	Interrupt Pending Bits 0: The corresponding message object is not the source of an interrupt. 1: The corresponding message object is the source of an interrupt.

Register 36: CAN Message 1 Valid (CANMSG1VAL), offset 0x160

Register 37: CAN Message 2 Valid (CANMSG2VAL), offset 0x164

The **CANMSG1VAL** and **CANMSG2VAL** registers hold the `MSGVAL` bits of the 32 message objects. By reading these bits, the CPU can check which message object is valid. The message value of a specific message object can be changed with the **CANIFnMCTL** register.

The **CANMSG1VAL** register contains the `MSGVAL` bits of the first 16 message objects in the message RAM; the **CANMSG2VAL** register contains the `MSGVAL` bits of the second 16 message objects in the message RAM.

CAN Message 1 Valid (CANMSG1VAL)

CAN0 base: 0x4004.0000
Offset 0x160
Type RO, reset 0x0000.0000

	31	30	29	28	27	26	25	24	23	22	21	20	19	18	17	16
	reserved															
Type	RO	RO	RO	RO	RO	RO	RO	RO	RO	RO	RO	RO	RO	RO	RO	RO
Reset	0	0	0	0	0	0	0	0	0	0	0	0	0	0	0	0

	15	14	13	12	11	10	9	8	7	6	5	4	3	2	1	0
	MSGVAL															
Type	RO	RO	RO	RO	RO	RO	RO	RO	RO	RO	RO	RO	RO	RO	RO	RO
Reset	0	0	0	0	0	0	0	0	0	0	0	0	0	0	0	0

Bit/Field	Name	Type	Reset	Description
31:16	reserved	RO	0x0000	Software should not rely on the value of a reserved bit. To provide compatibility with future products, the value of a reserved bit should be preserved across a read-modify-write operation.
15:0	MSGVAL	RO	0x0000	Message Valid Bits 0: The corresponding message object is not configured and is ignored by the message handler. 1: The corresponding message object is configured and should be considered by the message handler.

15 Analog Comparators

An analog comparator is a peripheral that compares two analog voltages, and provides a logical output that signals the comparison result.

Note: Not all comparators have the option to drive an output pin.

The comparator can provide its output to a device pin, acting as a replacement for an analog comparator on the board, or it can be used to signal the application via interrupts to cause it to start capturing a sample sequence.

The Stellaris® Analog Comparators module has the following features:

- Two independent integrated analog comparators
- Configurable for output to drive an output pin or generate an interrupt
- Compare external pin input to external pin input or to internal programmable voltage reference
- Compare a test voltage against any one of these voltages
  - An individual external reference voltage
  - A shared single external reference voltage
  - A shared internal reference voltage

15.1 Block Diagram

Figure 15-1. Analog Comparator Module Block Diagram

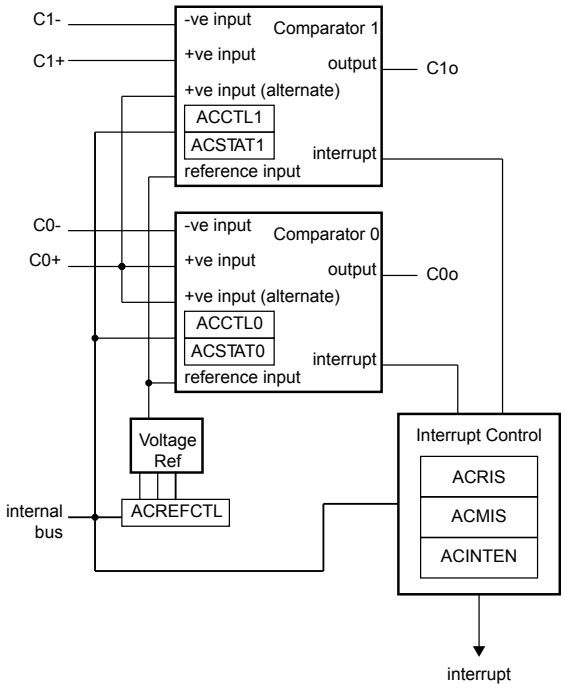

15.2 Signal Description

Table 15-1 on page 553 and Table 15-2 on page 553 list the external signals of the Analog Comparators and describe the function of each. The Analog Comparator output signals are alternate functions for some GPIO signals and default to be GPIO signals at reset. The column in the table below titled "Pin Assignment" lists the possible GPIO pin placements for the Analog Comparator signals. The `AFSEL` bit in the **GPIO Alternate Function Select (GPIOAFSEL)** register (page 301) should be set to choose the Analog Comparator function. The positive and negative input signals are configured by clearing the `DEN` bit in the **GPIO Digital Enable (GPIODEN)** register. For more information on configuring GPIOs, see “General-Purpose Input/Outputs (GPIOs)” on page 278.

Table 15-1. Analog Comparators Signals (100LQFP)

Pin Name	Pin Number	Pin Type	Buffer Type[a]	Description
`C0+`	90	I	Analog	Analog comparator 0 positive input.
`C0-`	92	I	Analog	Analog comparator 0 negative input.
`C0o`	58	O	TTL	Analog comparator 0 output.
`C1+`	24	I	Analog	Analog comparator 1 positive input.
`C1-`	91	I	Analog	Analog comparator 1 negative input.
`C1o`	2	O	TTL	Analog comparator 1 output.

a. The TTL designation indicates the pin has TTL-compatible voltage levels.

Table 15-2. Analog Comparators Signals (108BGA)

Pin Name	Pin Number	Pin Type	Buffer Type[a]	Description
`C0+`	A7	I	Analog	Analog comparator 0 positive input.
`C0-`	A6	I	Analog	Analog comparator 0 negative input.
`C0o`	L9	O	TTL	Analog comparator 0 output.
`C1+`	M1	I	Analog	Analog comparator 1 positive input.
`C1-`	B7	I	Analog	Analog comparator 1 negative input.
`C1o`	C2	O	TTL	Analog comparator 1 output.

a. The TTL designation indicates the pin has TTL-compatible voltage levels.

15.3 Functional Description

Important: It is recommended that the Digital-Input enable (the `GPIODEN` bit in the GPIO module) for the analog input pin be disabled to prevent excessive current draw from the I/O pads.

The comparator compares the VIN- and VIN+ inputs to produce an output, VOUT.

```
VIN- < VIN+, VOUT = 1
VIN- > VIN+, VOUT = 0
```

As shown in Figure 15-2 on page 554, the input source for VIN- is an external input. In addition to an external input, input sources for VIN+ can be the +ve input of comparator 0 or an internal reference.

Figure 15-2. Structure of Comparator Unit

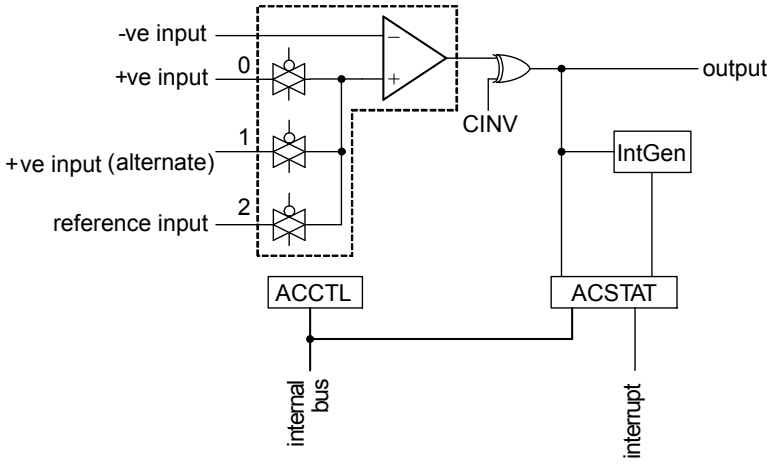

A comparator is configured through two status/control registers (**ACCTL** and **ACSTAT**). The internal reference is configured through one control register (**ACREFCTL**). Interrupt status and control is configured through three registers (**ACMIS**, **ACRIS**, and **ACINTEN**).

Typically, the comparator output is used internally to generate controller interrupts. It may also be used to drive an external pin.

Important: The ASRCP bits in the **ACCTLn** register must be set before using the analog comparators.

15.3.1 Internal Reference Programming

The structure of the internal reference is shown in Figure 15-3 on page 554. This is controlled by a single configuration register (**ACREFCTL**). Table 15-3 on page 554 shows the programming options to develop specific internal reference values, to compare an external voltage against a particular voltage generated internally.

Figure 15-3. Comparator Internal Reference Structure

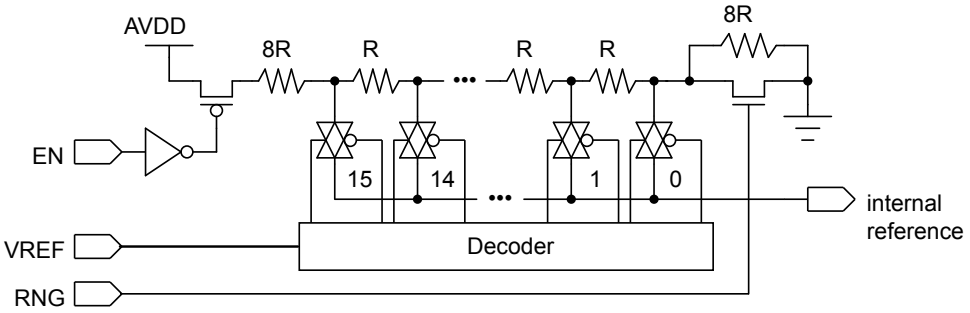

Table 15-3. Internal Reference Voltage and ACREFCTL Field Values

ACREFCTL Register		Output Reference Voltage Based on VREF Field Value
EN Bit Value	RNG Bit Value	
EN=0	RNG=X	0 V (GND) for any value of VREF; however, it is recommended that RNG=1 and VREF=0 for the least noisy ground reference.

Table 15-3. Internal Reference Voltage and ACREFCTL Field Values *(continued)*

ACREFCTL Register		Output Reference Voltage Based on VREF Field Value
EN Bit Value	RNG Bit Value	
EN=1	RNG=0	Total resistance in ladder is 31 R. $V_{REF} = AV_{DD} \times \frac{R_{VREF}}{R_T}$ $V_{REF} = AV_{DD} \times \frac{(VREF + 8)}{31}$ $V_{REF} = 0.85 + 0.106 \times VREF$ The range of internal reference in this mode is 0.85-2.448 V.
	RNG=1	Total resistance in ladder is 23 R. $V_{REF} = AV_{DD} \times \frac{R_{VREF}}{R_T}$ $V_{REF} = AV_{DD} \times \frac{VREF}{23}$ $V_{REF} = 0.143 \times VREF$ The range of internal reference for this mode is 0-2.152 V.

15.4 Initialization and Configuration

The following example shows how to configure an analog comparator to read back its output value from an internal register.

1. Enable the analog comparator 0 clock by writing a value of 0x0010.0000 to the **RCGC1** register in the System Control module.
2. In the GPIO module, enable the GPIO port/pin associated with `C0-` as a GPIO input.
3. Configure the internal voltage reference to 1.65 V by writing the **ACREFCTL** register with the value 0x0000.030C.
4. Configure comparator 0 to use the internal voltage reference and to *not* invert the output by writing the **ACCTL0** register with the value of 0x0000.040C.
5. Delay for some time.
6. Read the comparator output value by reading the **ACSTAT0** register's `OVAL` value.

Change the level of the signal input on `C0-` to see the `OVAL` value change.

15.5 Register Map

Table 15-4 on page 556 lists the comparator registers. The offset listed is a hexadecimal increment to the register's address, relative to the Analog Comparator base address of 0x4003.C000.

Note that the analog comparator module clock must be enabled before the registers can be programmed (see page 212). There must be a delay of 3 system clocks after the ADC module clock is enabled before any ADC module registers are accessed.

Table 15-4. Analog Comparators Register Map

Offset	Name	Type	Reset	Description	See page
0x000	ACMIS	R/W1C	0x0000.0000	Analog Comparator Masked Interrupt Status	557
0x004	ACRIS	RO	0x0000.0000	Analog Comparator Raw Interrupt Status	558
0x008	ACINTEN	R/W	0x0000.0000	Analog Comparator Interrupt Enable	559
0x010	ACREFCTL	R/W	0x0000.0000	Analog Comparator Reference Voltage Control	560
0x020	ACSTAT0	RO	0x0000.0000	Analog Comparator Status 0	561
0x024	ACCTL0	R/W	0x0000.0000	Analog Comparator Control 0	562
0x040	ACSTAT1	RO	0x0000.0000	Analog Comparator Status 1	561
0x044	ACCTL1	R/W	0x0000.0000	Analog Comparator Control 1	562

15.6 Register Descriptions

The remainder of this section lists and describes the Analog Comparator registers, in numerical order by address offset.

Register 1: Analog Comparator Masked Interrupt Status (ACMIS), offset 0x000

This register provides a summary of the interrupt status (masked) of the comparators.

Analog Comparator Masked Interrupt Status (ACMIS)

Base 0x4003.C000
Offset 0x000
Type R/W1C, reset 0x0000.0000

	31	30	29	28	27	26	25	24	23	22	21	20	19	18	17	16
	reserved															
Type	RO	RO	RO	RO	RO	RO	RO	RO	RO	RO	RO	RO	RO	RO	RO	RO
Reset	0	0	0	0	0	0	0	0	0	0	0	0	0	0	0	0

	15	14	13	12	11	10	9	8	7	6	5	4	3	2	1	0
	reserved														IN1	IN0
Type	RO	RO	RO	RO	RO	RO	RO	RO	RO	RO	RO	RO	RO	RO	R/W1C	R/W1C
Reset	0	0	0	0	0	0	0	0	0	0	0	0	0	0	0	0

Bit/Field	Name	Type	Reset	Description
31:2	reserved	RO	0x00	Software should not rely on the value of a reserved bit. To provide compatibility with future products, the value of a reserved bit should be preserved across a read-modify-write operation.
1	IN1	R/W1C	0	Comparator 1 Masked Interrupt Status Gives the masked interrupt state of this interrupt. Write 1 to this bit to clear the pending interrupt.
0	IN0	R/W1C	0	Comparator 0 Masked Interrupt Status Gives the masked interrupt state of this interrupt. Write 1 to this bit to clear the pending interrupt.

Register 2: Analog Comparator Raw Interrupt Status (ACRIS), offset 0x004

This register provides a summary of the interrupt status (raw) of the comparators.

Analog Comparator Raw Interrupt Status (ACRIS)

Base 0x4003.C000
Offset 0x004
Type RO, reset 0x0000.0000

	31	30	29	28	27	26	25	24	23	22	21	20	19	18	17	16
	reserved															
Type	RO	RO	RO	RO	RO	RO	RO	RO	RO	RO	RO	RO	RO	RO	RO	RO
Reset	0	0	0	0	0	0	0	0	0	0	0	0	0	0	0	0

	15	14	13	12	11	10	9	8	7	6	5	4	3	2	1	0
	reserved														IN1	IN0
Type	RO	RO	RO	RO	RO	RO	RO	RO	RO	RO	RO	RO	RO	RO	RO	RO
Reset	0	0	0	0	0	0	0	0	0	0	0	0	0	0	0	0

Bit/Field	Name	Type	Reset	Description
31:2	reserved	RO	0x00	Software should not rely on the value of a reserved bit. To provide compatibility with future products, the value of a reserved bit should be preserved across a read-modify-write operation.
1	IN1	RO	0	Comparator 1 Interrupt Status When set, indicates that an interrupt has been generated by comparator 1.
0	IN0	RO	0	Comparator 0 Interrupt Status When set, indicates that an interrupt has been generated by comparator 0.

Register 3: Analog Comparator Interrupt Enable (ACINTEN), offset 0x008

This register provides the interrupt enable for the comparators.

Analog Comparator Interrupt Enable (ACINTEN)

Base 0x4003.C000
Offset 0x008
Type R/W, reset 0x0000.0000

	31	30	29	28	27	26	25	24	23	22	21	20	19	18	17	16
	reserved															
Type	RO	RO	RO	RO	RO	RO	RO	RO	RO	RO	RO	RO	RO	RO	RO	RO
Reset	0	0	0	0	0	0	0	0	0	0	0	0	0	0	0	0

	15	14	13	12	11	10	9	8	7	6	5	4	3	2	1	0
	reserved														IN1	IN0
Type	RO	RO	RO	RO	RO	RO	RO	RO	RO	RO	RO	RO	RO	RO	R/W	R/W
Reset	0	0	0	0	0	0	0	0	0	0	0	0	0	0	0	0

Bit/Field	Name	Type	Reset	Description
31:2	reserved	RO	0x00	Software should not rely on the value of a reserved bit. To provide compatibility with future products, the value of a reserved bit should be preserved across a read-modify-write operation.
1	IN1	R/W	0	Comparator 1 Interrupt Enable When set, enables the controller interrupt from the comparator 1 output.
0	IN0	R/W	0	Comparator 0 Interrupt Enable When set, enables the controller interrupt from the comparator 0 output.

Register 4: Analog Comparator Reference Voltage Control (ACREFCTL), offset 0x010

This register specifies whether the resistor ladder is powered on as well as the range and tap.

Analog Comparator Reference Voltage Control (ACREFCTL)

Base 0x4003.C000
Offset 0x010
Type R/W, reset 0x0000.0000

	31	30	29	28	27	26	25	24	23	22	21	20	19	18	17	16
	reserved															
Type	RO	RO	RO	RO	RO	RO	RO	RO	RO	RO	RO	RO	RO	RO	RO	RO
Reset	0	0	0	0	0	0	0	0	0	0	0	0	0	0	0	0

	15	14	13	12	11	10	9	8	7	6	5	4	3	2	1	0
	reserved						EN	RNG	reserved				VREF			
Type	RO	RO	RO	RO	RO	RO	R/W	R/W	RO	RO	RO	RO	R/W	R/W	R/W	R/W
Reset	0	0	0	0	0	0	0	0	0	0	0	0	0	0	0	0

Bit/Field	Name	Type	Reset	Description
31:10	reserved	RO	0x00	Software should not rely on the value of a reserved bit. To provide compatibility with future products, the value of a reserved bit should be preserved across a read-modify-write operation.
9	EN	R/W	0	Resistor Ladder Enable The EN bit specifies whether the resistor ladder is powered on. If 0, the resistor ladder is unpowered. If 1, the resistor ladder is connected to the analog V_{DD}. This bit is reset to 0 so that the internal reference consumes the least amount of power if not used and programmed.
8	RNG	R/W	0	Resistor Ladder Range The RNG bit specifies the range of the resistor ladder. If 0, the resistor ladder has a total resistance of 31 R. If 1, the resistor ladder has a total resistance of 23 R.
7:4	reserved	RO	0x00	Software should not rely on the value of a reserved bit. To provide compatibility with future products, the value of a reserved bit should be preserved across a read-modify-write operation.
3:0	VREF	R/W	0x00	Resistor Ladder Voltage Ref The VREF bit field specifies the resistor ladder tap that is passed through an analog multiplexer. The voltage corresponding to the tap position is the internal reference voltage available for comparison. See Table 15-3 on page 554 for some output reference voltage examples.

Register 5: Analog Comparator Status 0 (ACSTAT0), offset 0x020

Register 6: Analog Comparator Status 1 (ACSTAT1), offset 0x040

These registers specify the current output value of the comparator.

Analog Comparator Status 0 (ACSTAT0)

Base 0x4003.C000
Offset 0x020
Type RO, reset 0x0000.0000

	31	30	29	28	27	26	25	24	23	22	21	20	19	18	17	16
	reserved															
Type	RO	RO	RO	RO	RO	RO	RO	RO	RO	RO	RO	RO	RO	RO	RO	RO
Reset	0	0	0	0	0	0	0	0	0	0	0	0	0	0	0	0

	15	14	13	12	11	10	9	8	7	6	5	4	3	2	1	0
	reserved														OVAL	reserved
Type	RO	RO	RO	RO	RO	RO	RO	RO	RO	RO	RO	RO	RO	RO	RO	RO
Reset	0	0	0	0	0	0	0	0	0	0	0	0	0	0	0	0

Bit/Field	Name	Type	Reset	Description
31:2	reserved	RO	0x00	Software should not rely on the value of a reserved bit. To provide compatibility with future products, the value of a reserved bit should be preserved across a read-modify-write operation.
1	OVAL	RO	0	Comparator Output Value The 0VAL bit specifies the current output value of the comparator.
0	reserved	RO	0	Software should not rely on the value of a reserved bit. To provide compatibility with future products, the value of a reserved bit should be preserved across a read-modify-write operation.

Register 7: Analog Comparator Control 0 (ACCTL0), offset 0x024

Register 8: Analog Comparator Control 1 (ACCTL1), offset 0x044

These registers configure the comparator's input and output.

Analog Comparator Control 0 (ACCTL0)

Base 0x4003.C000
Offset 0x024
Type R/W, reset 0x0000.0000

	31	30	29	28	27	26	25	24	23	22	21	20	19	18	17	16
	reserved															
Type	RO	RO	RO	RO	RO	RO	RO	RO	RO	RO	RO	RO	RO	RO	RO	RO
Reset	0	0	0	0	0	0	0	0	0	0	0	0	0	0	0	0

	15	14	13	12	11	10	9	8	7	6	5	4	3	2	1	0
	reserved					ASRCP		reserved				ISLVAL	ISEN		CINV	reserved
Type	RO	RO	RO	RO	RO	R/W	R/W	RO	RO	RO	RO	R/W	R/W	R/W	R/W	RO
Reset	0	0	0	0	0	0	0	0	0	0	0	0	0	0	0	0

Bit/Field	Name	Type	Reset	Description
31:11	reserved	RO	0x00	Software should not rely on the value of a reserved bit. To provide compatibility with future products, the value of a reserved bit should be preserved across a read-modify-write operation.
10:9	ASRCP	R/W	0x00	Analog Source Positive The ASRCP field specifies the source of input voltage to the VIN+ terminal of the comparator. The encodings for this field are as follows: Value Function 0x0 Pin value 0x1 Pin value of C0+ 0x2 Internal voltage reference 0x3 Reserved
8:5	reserved	RO	0	Software should not rely on the value of a reserved bit. To provide compatibility with future products, the value of a reserved bit should be preserved across a read-modify-write operation.
4	ISLVAL	R/W	0	Interrupt Sense Level Value The ISLVAL bit specifies the sense value of the input that generates an interrupt if in Level Sense mode. If 0, an interrupt is generated if the comparator output is Low. Otherwise, an interrupt is generated if the comparator output is High.
3:2	ISEN	R/W	0x0	Interrupt Sense The ISEN field specifies the sense of the comparator output that generates an interrupt. The sense conditioning is as follows: Value Function 0x0 Level sense, see ISLVAL 0x1 Falling edge 0x2 Rising edge 0x3 Either edge

Bit/Field	Name	Type	Reset	Description
1	CINV	R/W	0	Comparator Output Invert The `CINV` bit conditionally inverts the output of the comparator. If 0, the output of the comparator is unchanged. If 1, the output of the comparator is inverted prior to being processed by hardware.
0	reserved	RO	0	Software should not rely on the value of a reserved bit. To provide compatibility with future products, the value of a reserved bit should be preserved across a read-modify-write operation.

16 Pin Diagram

The LM3S2911 microcontroller pin diagrams are shown below.

Figure 16-1. 100-Pin LQFP Package Pin Diagram

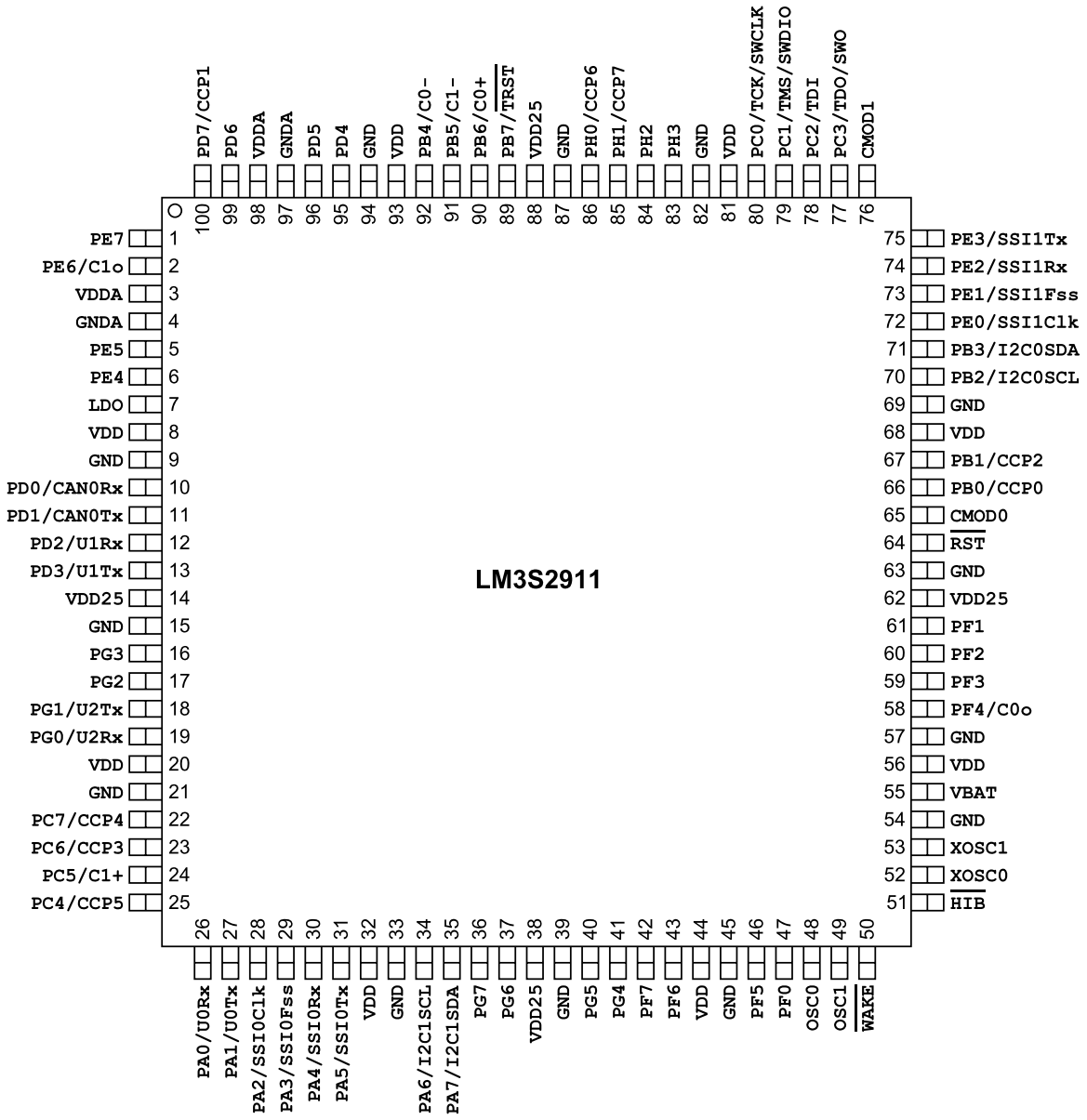

Figure 16-2. 108-Ball BGA Package Pin Diagram (Top View)

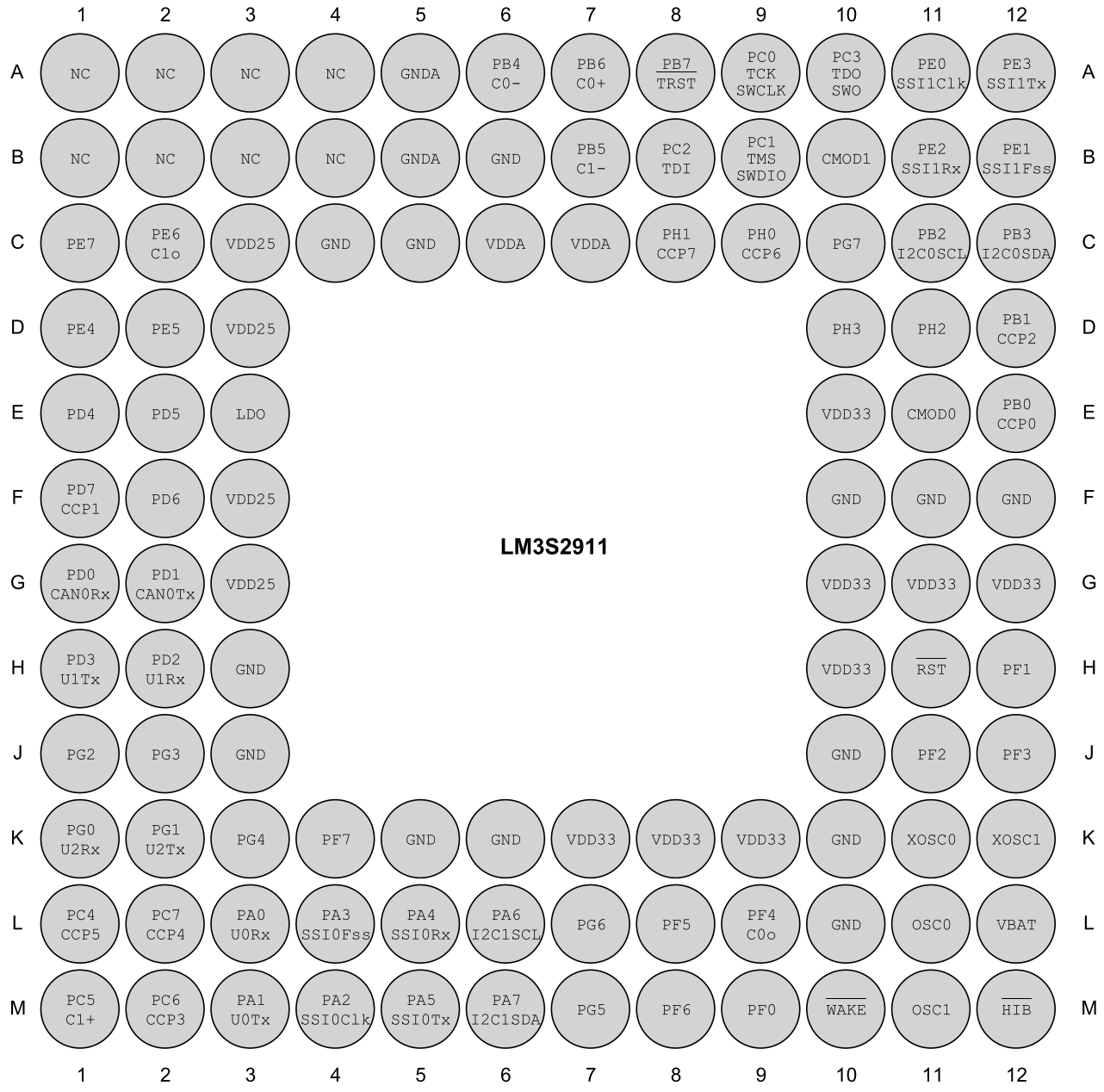

17 Signal Tables

The following tables list the signals available for each pin. Functionality is enabled by software with the **GPIOAFSEL** register.

Important: All multiplexed pins are GPIOs by default, with the exception of the five JTAG pins (PB7 and PC[3:0]) which default to the JTAG functionality.

Table 17-1 on page 566 shows the pin-to-signal-name mapping, including functional characteristics of the signals. Table 17-2 on page 570 lists the signals in alphabetical order by signal name.

Table 17-3 on page 574 groups the signals by functionality, except for GPIOs. Table 17-4 on page 577 lists the GPIO pins and their alternate functionality.

Note: All digital inputs are Schmitt triggered.

17.1 100-Pin LQFP Package Pin Tables

Table 17-1. Signals by Pin Number

Pin Number	Pin Name	Pin Type	Buffer Type[a]	Description
1	PE7	I/O	TTL	GPIO port E bit 7.
2	PE6	I/O	TTL	GPIO port E bit 6.
	C1o	O	TTL	Analog comparator 1 output.
3	VDDA	-	Power	The positive supply (3.3 V) for the analog circuits (ADC, Analog Comparators, etc.). These are separated from VDD to minimize the electrical noise contained on VDD from affecting the analog functions. VDDA pins must be connected to 3.3 V, regardless of system implementation.
4	GNDA	-	Power	The ground reference for the analog circuits (Analog Comparators, etc.). These are separated from GND to minimize the electrical noise contained on VDD from affecting the analog functions.
5	PE5	I/O	TTL	GPIO port E bit 5.
6	PE4	I/O	TTL	GPIO port E bit 4.
7	LDO	-	Power	Low drop-out regulator output voltage. This pin requires an external capacitor between the pin and GND of 1 µF or greater. When the on-chip LDO is used to provide power to the logic, the LDO pin must also be connected to the VDD25 pins at the board level in addition to the decoupling capacitor(s).
8	VDD	-	Power	Positive supply for I/O and some logic.
9	GND	-	Power	Ground reference for logic and I/O pins.
10	PD0	I/O	TTL	GPIO port D bit 0.
	CAN0Rx	I	TTL	CAN module 0 receive.
11	PD1	I/O	TTL	GPIO port D bit 1.
	CAN0Tx	O	TTL	CAN module 0 transmit.
12	PD2	I/O	TTL	GPIO port D bit 2.
	U1Rx	I	TTL	UART module 1 receive. When in IrDA mode, this signal has IrDA modulation.
13	PD3	I/O	TTL	GPIO port D bit 3.
	U1Tx	O	TTL	UART module 1 transmit. When in IrDA mode, this signal has IrDA modulation.

Table 17-1. Signals by Pin Number *(continued)*

Pin Number	Pin Name	Pin Type	Buffer Type[a]	Description
14	VDD25	-	Power	Positive supply for most of the logic function, including the processor core and most peripherals.
15	GND	-	Power	Ground reference for logic and I/O pins.
16	PG3	I/O	TTL	GPIO port G bit 3.
17	PG2	I/O	TTL	GPIO port G bit 2.
18	PG1	I/O	TTL	GPIO port G bit 1.
	U2Tx	O	TTL	UART module 2 transmit. When in IrDA mode, this signal has IrDA modulation.
19	PG0	I/O	TTL	GPIO port G bit 0.
	U2Rx	I	TTL	UART module 2 receive. When in IrDA mode, this signal has IrDA modulation.
20	VDD	-	Power	Positive supply for I/O and some logic.
21	GND	-	Power	Ground reference for logic and I/O pins.
22	PC7	I/O	TTL	GPIO port C bit 7.
	CCP4	I/O	TTL	Capture/Compare/PWM 4.
23	PC6	I/O	TTL	GPIO port C bit 6.
	CCP3	I/O	TTL	Capture/Compare/PWM 3.
24	PC5	I/O	TTL	GPIO port C bit 5.
	C1+	I	Analog	Analog comparator 1 positive input.
25	PC4	I/O	TTL	GPIO port C bit 4.
	CCP5	I/O	TTL	Capture/Compare/PWM 5.
26	PA0	I/O	TTL	GPIO port A bit 0.
	U0Rx	I	TTL	UART module 0 receive. When in IrDA mode, this signal has IrDA modulation.
27	PA1	I/O	TTL	GPIO port A bit 1.
	U0Tx	O	TTL	UART module 0 transmit. When in IrDA mode, this signal has IrDA modulation.
28	PA2	I/O	TTL	GPIO port A bit 2.
	SSI0Clk	I/O	TTL	SSI module 0 clock.
29	PA3	I/O	TTL	GPIO port A bit 3.
	SSI0Fss	I/O	TTL	SSI module 0 frame.
30	PA4	I/O	TTL	GPIO port A bit 4.
	SSI0Rx	I	TTL	SSI module 0 receive.
31	PA5	I/O	TTL	GPIO port A bit 5.
	SSI0Tx	O	TTL	SSI module 0 transmit.
32	VDD	-	Power	Positive supply for I/O and some logic.
33	GND	-	Power	Ground reference for logic and I/O pins.
34	PA6	I/O	TTL	GPIO port A bit 6.
	I2C1SCL	I/O	OD	I^2C module 1 clock.
35	PA7	I/O	TTL	GPIO port A bit 7.
	I2C1SDA	I/O	OD	I^2C module 1 data.
36	PG7	I/O	TTL	GPIO port G bit 7.
37	PG6	I/O	TTL	GPIO port G bit 6.

Table 17-1. Signals by Pin Number *(continued)*

Pin Number	Pin Name	Pin Type	Buffer Type[a]	Description
38	VDD25	-	Power	Positive supply for most of the logic function, including the processor core and most peripherals.
39	GND	-	Power	Ground reference for logic and I/O pins.
40	PG5	I/O	TTL	GPIO port G bit 5.
41	PG4	I/O	TTL	GPIO port G bit 4.
42	PF7	I/O	TTL	GPIO port F bit 7.
43	PF6	I/O	TTL	GPIO port F bit 6.
44	VDD	-	Power	Positive supply for I/O and some logic.
45	GND	-	Power	Ground reference for logic and I/O pins.
46	PF5	I/O	TTL	GPIO port F bit 5.
47	PF0	I/O	TTL	GPIO port F bit 0.
48	OSC0	I	Analog	Main oscillator crystal input or an external clock reference input.
49	OSC1	O	Analog	Main oscillator crystal output. Leave unconnected when using a single-ended clock source.
50	$\overline{\text{WAKE}}$	I	TTL	An external input that brings the processor out of Hibernate mode when asserted.
51	$\overline{\text{HIB}}$	O	OD	An open-drain output with internal pull-up that indicates the processor is in Hibernate mode.
52	XOSC0	I	Analog	Hibernation module oscillator crystal input or an external clock reference input. Note that this is either a crystal or a 32.768-kHz oscillator for the Hibernation module RTC.
53	XOSC1	O	Analog	Hibernation module oscillator crystal output. Leave unconnected when using a single-ended clock source.
54	GND	-	Power	Ground reference for logic and I/O pins.
55	VBAT	-	Power	Power source for the Hibernation module. It is normally connected to the positive terminal of a battery and serves as the battery backup/Hibernation module power-source supply.
56	VDD	-	Power	Positive supply for I/O and some logic.
57	GND	-	Power	Ground reference for logic and I/O pins.
58	PF4	I/O	TTL	GPIO port F bit 4.
	C0o	O	TTL	Analog comparator 0 output.
59	PF3	I/O	TTL	GPIO port F bit 3.
60	PF2	I/O	TTL	GPIO port F bit 2.
61	PF1	I/O	TTL	GPIO port F bit 1.
62	VDD25	-	Power	Positive supply for most of the logic function, including the processor core and most peripherals.
63	GND	-	Power	Ground reference for logic and I/O pins.
64	$\overline{\text{RST}}$	I	TTL	System reset input.
65	CMOD0	I	TTL	CPU Mode bit 0. Input must be set to logic 0 (grounded); other encodings reserved.
66	PB0	I/O	TTL	GPIO port B bit 0.
	CCP0	I/O	TTL	Capture/Compare/PWM 0.
67	PB1	I/O	TTL	GPIO port B bit 1.
	CCP2	I/O	TTL	Capture/Compare/PWM 2.
68	VDD	-	Power	Positive supply for I/O and some logic.

Table 17-1. Signals by Pin Number *(continued)*

Pin Number	Pin Name	Pin Type	Buffer Type[a]	Description
69	GND	-	Power	Ground reference for logic and I/O pins.
70	PB2	I/O	TTL	GPIO port B bit 2.
	I2C0SCL	I/O	OD	I^2C module 0 clock.
71	PB3	I/O	TTL	GPIO port B bit 3.
	I2C0SDA	I/O	OD	I^2C module 0 data.
72	PE0	I/O	TTL	GPIO port E bit 0.
	SSI1Clk	I/O	TTL	SSI module 1 clock.
73	PE1	I/O	TTL	GPIO port E bit 1.
	SSI1Fss	I/O	TTL	SSI module 1 frame.
74	PE2	I/O	TTL	GPIO port E bit 2.
	SSI1Rx	I	TTL	SSI module 1 receive.
75	PE3	I/O	TTL	GPIO port E bit 3.
	SSI1Tx	O	TTL	SSI module 1 transmit.
76	CMOD1	I	TTL	CPU Mode bit 1. Input must be set to logic 0 (grounded); other encodings reserved.
77	PC3	I/O	TTL	GPIO port C bit 3.
	SWO	O	TTL	JTAG TDO and SWO.
	TDO	O	TTL	JTAG TDO and SWO.
78	PC2	I/O	TTL	GPIO port C bit 2.
	TDI	I	TTL	JTAG TDI.
79	PC1	I/O	TTL	GPIO port C bit 1.
	SWDIO	I/O	TTL	JTAG TMS and SWDIO.
	TMS	I/O	TTL	JTAG TMS and SWDIO.
80	PC0	I/O	TTL	GPIO port C bit 0.
	SWCLK	I	TTL	JTAG/SWD CLK.
	TCK	I	TTL	JTAG/SWD CLK.
81	VDD	-	Power	Positive supply for I/O and some logic.
82	GND	-	Power	Ground reference for logic and I/O pins.
83	PH3	I/O	TTL	GPIO port H bit 3.
84	PH2	I/O	TTL	GPIO port H bit 2.
85	PH1	I/O	TTL	GPIO port H bit 1.
	CCP7	I/O	TTL	Capture/Compare/PWM 7.
86	PH0	I/O	TTL	GPIO port H bit 0.
	CCP6	I/O	TTL	Capture/Compare/PWM 6.
87	GND	-	Power	Ground reference for logic and I/O pins.
88	VDD25	-	Power	Positive supply for most of the logic function, including the processor core and most peripherals.
89	PB7	I/O	TTL	GPIO port B bit 7.
	TRST	I	TTL	JTAG TRST.
90	PB6	I/O	TTL	GPIO port B bit 6.
	C0+	I	Analog	Analog comparator 0 positive input.

Table 17-1. Signals by Pin Number *(continued)*

Pin Number	Pin Name	Pin Type	Buffer Type[a]	Description
91	PB5	I/O	TTL	GPIO port B bit 5.
	C1-	I	Analog	Analog comparator 1 negative input.
92	PB4	I/O	TTL	GPIO port B bit 4.
	C0-	I	Analog	Analog comparator 0 negative input.
93	VDD	-	Power	Positive supply for I/O and some logic.
94	GND	-	Power	Ground reference for logic and I/O pins.
95	PD4	I/O	TTL	GPIO port D bit 4.
96	PD5	I/O	TTL	GPIO port D bit 5.
97	GNDA	-	Power	The ground reference for the analog circuits (Analog Comparators, etc.). These are separated from GND to minimize the electrical noise contained on VDD from affecting the analog functions.
98	VDDA	-	Power	The positive supply (3.3 V) for the analog circuits (ADC, Analog Comparators, etc.). These are separated from VDD to minimize the electrical noise contained on VDD from affecting the analog functions. VDDA pins must be connected to 3.3 V, regardless of system implementation.
99	PD6	I/O	TTL	GPIO port D bit 6.
100	PD7	I/O	TTL	GPIO port D bit 7.
	CCP1	I/O	TTL	Capture/Compare/PWM 1.

a. The TTL designation indicates the pin has TTL-compatible voltage levels.

Table 17-2. Signals by Signal Name

Pin Name	Pin Number	Pin Type	Buffer Type[a]	Description
C0+	90	I	Analog	Analog comparator 0 positive input.
C0-	92	I	Analog	Analog comparator 0 negative input.
C0o	58	O	TTL	Analog comparator 0 output.
C1+	24	I	Analog	Analog comparator 1 positive input.
C1-	91	I	Analog	Analog comparator 1 negative input.
C1o	2	O	TTL	Analog comparator 1 output.
CAN0Rx	10	I	TTL	CAN module 0 receive.
CAN0Tx	11	O	TTL	CAN module 0 transmit.
CCP0	66	I/O	TTL	Capture/Compare/PWM 0.
CCP1	100	I/O	TTL	Capture/Compare/PWM 1.
CCP2	67	I/O	TTL	Capture/Compare/PWM 2.
CCP3	23	I/O	TTL	Capture/Compare/PWM 3.
CCP4	22	I/O	TTL	Capture/Compare/PWM 4.
CCP5	25	I/O	TTL	Capture/Compare/PWM 5.
CCP6	86	I/O	TTL	Capture/Compare/PWM 6.
CCP7	85	I/O	TTL	Capture/Compare/PWM 7.
CMOD0	65	I	TTL	CPU Mode bit 0. Input must be set to logic 0 (grounded); other encodings reserved.
CMOD1	76	I	TTL	CPU Mode bit 1. Input must be set to logic 0 (grounded); other encodings reserved.

Table 17-2. Signals by Signal Name *(continued)*

Pin Name	Pin Number	Pin Type	Buffer Type[a]	Description
GND	9 15 21 33 39 45 54 57 63 69 82 87 94	-	Power	Ground reference for logic and I/O pins.
GNDA	4 97	-	Power	The ground reference for the analog circuits (Analog Comparators, etc.). These are separated from GND to minimize the electrical noise contained on VDD from affecting the analog functions.
$\overline{\text{HIB}}$	51	O	OD	An open-drain output with internal pull-up that indicates the processor is in Hibernate mode.
I2C0SCL	70	I/O	OD	I^2C module 0 clock.
I2C0SDA	71	I/O	OD	I^2C module 0 data.
I2C1SCL	34	I/O	OD	I^2C module 1 clock.
I2C1SDA	35	I/O	OD	I^2C module 1 data.
LDO	7	-	Power	Low drop-out regulator output voltage. This pin requires an external capacitor between the pin and GND of 1 µF or greater. When the on-chip LDO is used to provide power to the logic, the LDO pin must also be connected to the VDD25 pins at the board level in addition to the decoupling capacitor(s).
OSC0	48	I	Analog	Main oscillator crystal input or an external clock reference input.
OSC1	49	O	Analog	Main oscillator crystal output. Leave unconnected when using a single-ended clock source.
PA0	26	I/O	TTL	GPIO port A bit 0.
PA1	27	I/O	TTL	GPIO port A bit 1.
PA2	28	I/O	TTL	GPIO port A bit 2.
PA3	29	I/O	TTL	GPIO port A bit 3.
PA4	30	I/O	TTL	GPIO port A bit 4.
PA5	31	I/O	TTL	GPIO port A bit 5.
PA6	34	I/O	TTL	GPIO port A bit 6.
PA7	35	I/O	TTL	GPIO port A bit 7.
PB0	66	I/O	TTL	GPIO port B bit 0.
PB1	67	I/O	TTL	GPIO port B bit 1.
PB2	70	I/O	TTL	GPIO port B bit 2.
PB3	71	I/O	TTL	GPIO port B bit 3.
PB4	92	I/O	TTL	GPIO port B bit 4.
PB5	91	I/O	TTL	GPIO port B bit 5.
PB6	90	I/O	TTL	GPIO port B bit 6.

Table 17-2. Signals by Signal Name *(continued)*

Pin Name	Pin Number	Pin Type	Buffer Type[a]	Description
PB7	89	I/O	TTL	GPIO port B bit 7.
PC0	80	I/O	TTL	GPIO port C bit 0.
PC1	79	I/O	TTL	GPIO port C bit 1.
PC2	78	I/O	TTL	GPIO port C bit 2.
PC3	77	I/O	TTL	GPIO port C bit 3.
PC4	25	I/O	TTL	GPIO port C bit 4.
PC5	24	I/O	TTL	GPIO port C bit 5.
PC6	23	I/O	TTL	GPIO port C bit 6.
PC7	22	I/O	TTL	GPIO port C bit 7.
PD0	10	I/O	TTL	GPIO port D bit 0.
PD1	11	I/O	TTL	GPIO port D bit 1.
PD2	12	I/O	TTL	GPIO port D bit 2.
PD3	13	I/O	TTL	GPIO port D bit 3.
PD4	95	I/O	TTL	GPIO port D bit 4.
PD5	96	I/O	TTL	GPIO port D bit 5.
PD6	99	I/O	TTL	GPIO port D bit 6.
PD7	100	I/O	TTL	GPIO port D bit 7.
PE0	72	I/O	TTL	GPIO port E bit 0.
PE1	73	I/O	TTL	GPIO port E bit 1.
PE2	74	I/O	TTL	GPIO port E bit 2.
PE3	75	I/O	TTL	GPIO port E bit 3.
PE4	6	I/O	TTL	GPIO port E bit 4.
PE5	5	I/O	TTL	GPIO port E bit 5.
PE6	2	I/O	TTL	GPIO port E bit 6.
PE7	1	I/O	TTL	GPIO port E bit 7.
PF0	47	I/O	TTL	GPIO port F bit 0.
PF1	61	I/O	TTL	GPIO port F bit 1.
PF2	60	I/O	TTL	GPIO port F bit 2.
PF3	59	I/O	TTL	GPIO port F bit 3.
PF4	58	I/O	TTL	GPIO port F bit 4.
PF5	46	I/O	TTL	GPIO port F bit 5.
PF6	43	I/O	TTL	GPIO port F bit 6.
PF7	42	I/O	TTL	GPIO port F bit 7.
PG0	19	I/O	TTL	GPIO port G bit 0.
PG1	18	I/O	TTL	GPIO port G bit 1.
PG2	17	I/O	TTL	GPIO port G bit 2.
PG3	16	I/O	TTL	GPIO port G bit 3.
PG4	41	I/O	TTL	GPIO port G bit 4.
PG5	40	I/O	TTL	GPIO port G bit 5.
PG6	37	I/O	TTL	GPIO port G bit 6.
PG7	36	I/O	TTL	GPIO port G bit 7.

Table 17-2. Signals by Signal Name *(continued)*

Pin Name	Pin Number	Pin Type	Buffer Type[a]	Description
PH0	86	I/O	TTL	GPIO port H bit 0.
PH1	85	I/O	TTL	GPIO port H bit 1.
PH2	84	I/O	TTL	GPIO port H bit 2.
PH3	83	I/O	TTL	GPIO port H bit 3.
$\overline{\text{RST}}$	64	I	TTL	System reset input.
SSI0Clk	28	I/O	TTL	SSI module 0 clock.
SSI0Fss	29	I/O	TTL	SSI module 0 frame.
SSI0Rx	30	I	TTL	SSI module 0 receive.
SSI0Tx	31	O	TTL	SSI module 0 transmit.
SSI1Clk	72	I/O	TTL	SSI module 1 clock.
SSI1Fss	73	I/O	TTL	SSI module 1 frame.
SSI1Rx	74	I	TTL	SSI module 1 receive.
SSI1Tx	75	O	TTL	SSI module 1 transmit.
SWCLK	80	I	TTL	JTAG/SWD CLK.
SWDIO	79	I/O	TTL	JTAG TMS and SWDIO.
SWO	77	O	TTL	JTAG TDO and SWO.
TCK	80	I	TTL	JTAG/SWD CLK.
TDI	78	I	TTL	JTAG TDI.
TDO	77	O	TTL	JTAG TDO and SWO.
TMS	79	I/O	TTL	JTAG TMS and SWDIO.
$\overline{\text{TRST}}$	89	I	TTL	JTAG $\overline{\text{TRST}}$.
U0Rx	26	I	TTL	UART module 0 receive. When in IrDA mode, this signal has IrDA modulation.
U0Tx	27	O	TTL	UART module 0 transmit. When in IrDA mode, this signal has IrDA modulation.
U1Rx	12	I	TTL	UART module 1 receive. When in IrDA mode, this signal has IrDA modulation.
U1Tx	13	O	TTL	UART module 1 transmit. When in IrDA mode, this signal has IrDA modulation.
U2Rx	19	I	TTL	UART module 2 receive. When in IrDA mode, this signal has IrDA modulation.
U2Tx	18	O	TTL	UART module 2 transmit. When in IrDA mode, this signal has IrDA modulation.
VBAT	55	-	Power	Power source for the Hibernation module. It is normally connected to the positive terminal of a battery and serves as the battery backup/Hibernation module power-source supply.
VDD	8 20 32 44 56 68 81 93	-	Power	Positive supply for I/O and some logic.

Table 17-2. Signals by Signal Name *(continued)*

Pin Name	Pin Number	Pin Type	Buffer Type[a]	Description
VDD25	14 38 62 88	-	Power	Positive supply for most of the logic function, including the processor core and most peripherals.
VDDA	3 98	-	Power	The positive supply (3.3 V) for the analog circuits (ADC, Analog Comparators, etc.). These are separated from VDD to minimize the electrical noise contained on VDD from affecting the analog functions. VDDA pins must be connected to 3.3 V, regardless of system implementation.
$\overline{\text{WAKE}}$	50	I	TTL	An external input that brings the processor out of Hibernate mode when asserted.
XOSC0	52	I	Analog	Hibernation module oscillator crystal input or an external clock reference input. Note that this is either a crystal or a 32.768-kHz oscillator for the Hibernation module RTC.
XOSC1	53	O	Analog	Hibernation module oscillator crystal output. Leave unconnected when using a single-ended clock source.

a. The TTL designation indicates the pin has TTL-compatible voltage levels.

Table 17-3. Signals by Function, Except for GPIO

Function	Pin Name	Pin Number	Pin Type	Buffer Type[a]	Description
Analog Comparators	C0+	90	I	Analog	Analog comparator 0 positive input.
	C0-	92	I	Analog	Analog comparator 0 negative input.
	C0o	58	O	TTL	Analog comparator 0 output.
	C1+	24	I	Analog	Analog comparator 1 positive input.
	C1-	91	I	Analog	Analog comparator 1 negative input.
	C1o	2	O	TTL	Analog comparator 1 output.
Controller Area Network	CAN0Rx	10	I	TTL	CAN module 0 receive.
	CAN0Tx	11	O	TTL	CAN module 0 transmit.
General-Purpose Timers	CCP0	66	I/O	TTL	Capture/Compare/PWM 0.
	CCP1	100	I/O	TTL	Capture/Compare/PWM 1.
	CCP2	67	I/O	TTL	Capture/Compare/PWM 2.
	CCP3	23	I/O	TTL	Capture/Compare/PWM 3.
	CCP4	22	I/O	TTL	Capture/Compare/PWM 4.
	CCP5	25	I/O	TTL	Capture/Compare/PWM 5.
	CCP6	86	I/O	TTL	Capture/Compare/PWM 6.
	CCP7	85	I/O	TTL	Capture/Compare/PWM 7.

Table 17-3. Signals by Function, Except for GPIO *(continued)*

Function	Pin Name	Pin Number	Pin Type	Buffer Type[a]	Description
Hibernate	HIB	51	O	OD	An open-drain output with internal pull-up that indicates the processor is in Hibernate mode.
	VBAT	55	-	Power	Power source for the Hibernation module. It is normally connected to the positive terminal of a battery and serves as the battery backup/Hibernation module power-source supply.
	WAKE	50	I	TTL	An external input that brings the processor out of Hibernate mode when asserted.
	XOSC0	52	I	Analog	Hibernation module oscillator crystal input or an external clock reference input. Note that this is either a crystal or a 32.768-kHz oscillator for the Hibernation module RTC.
	XOSC1	53	O	Analog	Hibernation module oscillator crystal output. Leave unconnected when using a single-ended clock source.
I2C	I2C0SCL	70	I/O	OD	I^2C module 0 clock.
	I2C0SDA	71	I/O	OD	I^2C module 0 data.
	I2C1SCL	34	I/O	OD	I^2C module 1 clock.
	I2C1SDA	35	I/O	OD	I^2C module 1 data.
JTAG/SWD/SWO	SWCLK	80	I	TTL	JTAG/SWD CLK.
	SWDIO	79	I/O	TTL	JTAG TMS and SWDIO.
	SWO	77	O	TTL	JTAG TDO and SWO.
	TCK	80	I	TTL	JTAG/SWD CLK.
	TDI	78	I	TTL	JTAG TDI.
	TDO	77	O	TTL	JTAG TDO and SWO.
	TMS	79	I/O	TTL	JTAG TMS and SWDIO.
	TRST	89	I	TTL	JTAG TRST.

Table 17-3. Signals by Function, Except for GPIO *(continued)*

Function	Pin Name	Pin Number	Pin Type	Buffer Type[a]	Description
Power	GND	9 15 21 33 39 45 54 57 63 69 82 87 94	-	Power	Ground reference for logic and I/O pins.
	GNDA	4 97	-	Power	The ground reference for the analog circuits (Analog Comparators, etc.). These are separated from GND to minimize the electrical noise contained on VDD from affecting the analog functions.
	LDO	7	-	Power	Low drop-out regulator output voltage. This pin requires an external capacitor between the pin and GND of 1 µF or greater. When the on-chip LDO is used to provide power to the logic, the LDO pin must also be connected to the VDD25 pins at the board level in addition to the decoupling capacitor(s).
	VDD	8 20 32 44 56 68 81 93	-	Power	Positive supply for I/O and some logic.
	VDD25	14 38 62 88	-	Power	Positive supply for most of the logic function, including the processor core and most peripherals.
	VDDA	3 98	-	Power	The positive supply (3.3 V) for the analog circuits (ADC, Analog Comparators, etc.). These are separated from VDD to minimize the electrical noise contained on VDD from affecting the analog functions. VDDA pins must be connected to 3.3 V, regardless of system implementation.
SSI	SSI0Clk	28	I/O	TTL	SSI module 0 clock.
	SSI0Fss	29	I/O	TTL	SSI module 0 frame.
	SSI0Rx	30	I	TTL	SSI module 0 receive.
	SSI0Tx	31	O	TTL	SSI module 0 transmit.
	SSI1Clk	72	I/O	TTL	SSI module 1 clock.
	SSI1Fss	73	I/O	TTL	SSI module 1 frame.
	SSI1Rx	74	I	TTL	SSI module 1 receive.
	SSI1Tx	75	O	TTL	SSI module 1 transmit.

Table 17-3. Signals by Function, Except for GPIO *(continued)*

Function	Pin Name	Pin Number	Pin Type	Buffer Type[a]	Description
System Control & Clocks	CMOD0	65	I	TTL	CPU Mode bit 0. Input must be set to logic 0 (grounded); other encodings reserved.
	CMOD1	76	I	TTL	CPU Mode bit 1. Input must be set to logic 0 (grounded); other encodings reserved.
	OSC0	48	I	Analog	Main oscillator crystal input or an external clock reference input.
	OSC1	49	O	Analog	Main oscillator crystal output. Leave unconnected when using a single-ended clock source.
	RST	64	I	TTL	System reset input.
UART	U0Rx	26	I	TTL	UART module 0 receive. When in IrDA mode, this signal has IrDA modulation.
	U0Tx	27	O	TTL	UART module 0 transmit. When in IrDA mode, this signal has IrDA modulation.
	U1Rx	12	I	TTL	UART module 1 receive. When in IrDA mode, this signal has IrDA modulation.
	U1Tx	13	O	TTL	UART module 1 transmit. When in IrDA mode, this signal has IrDA modulation.
	U2Rx	19	I	TTL	UART module 2 receive. When in IrDA mode, this signal has IrDA modulation.
	U2Tx	18	O	TTL	UART module 2 transmit. When in IrDA mode, this signal has IrDA modulation.

a. The TTL designation indicates the pin has TTL-compatible voltage levels.

Table 17-4. GPIO Pins and Alternate Functions

IO	Pin Number	Multiplexed Function	Multiplexed Function
PA0	26	U0Rx	
PA1	27	U0Tx	
PA2	28	SSI0Clk	
PA3	29	SSI0Fss	
PA4	30	SSI0Rx	
PA5	31	SSI0Tx	
PA6	34	I2C1SCL	
PA7	35	I2C1SDA	
PB0	66	CCP0	
PB1	67	CCP2	
PB2	70	I2C0SCL	
PB3	71	I2C0SDA	
PB4	92	C0-	
PB5	91	C1-	
PB6	90	C0+	
PB7	89	TRST	
PC0	80	TCK	SWCLK
PC1	79	TMS	SWDIO
PC2	78	TDI	
PC3	77	TDO	SWO

Table 17-4. GPIO Pins and Alternate Functions *(continued)*

IO	Pin Number	Multiplexed Function	Multiplexed Function
PC4	25	CCP5	
PC5	24	C1+	
PC6	23	CCP3	
PC7	22	CCP4	
PD0	10	CAN0Rx	
PD1	11	CAN0Tx	
PD2	12	U1Rx	
PD3	13	U1Tx	
PD4	95		
PD5	96		
PD6	99		
PD7	100	CCP1	
PE0	72	SSI1Clk	
PE1	73	SSI1Fss	
PE2	74	SSI1Rx	
PE3	75	SSI1Tx	
PE4	6		
PE5	5		
PE6	2	C1o	
PE7	1		
PF0	47		
PF1	61		
PF2	60		
PF3	59		
PF4	58	C0o	
PF5	46		
PF6	43		
PF7	42		
PG0	19	U2Rx	
PG1	18	U2Tx	
PG2	17		
PG3	16		
PG4	41		
PG5	40		
PG6	37		
PG7	36		
PH0	86	CCP6	
PH1	85	CCP7	
PH2	84		
PH3	83		

17.2 108-Ball BGA Package Pin Tables

Table 17-5. Signals by Pin Number

Pin Number	Pin Name	Pin Type	Buffer Type[a]	Description
A1	NC	-	-	No connect. Leave the pin electrically unconnected/isolated.
A2	NC	-	-	No connect. Leave the pin electrically unconnected/isolated.
A3	NC	-	-	No connect. Leave the pin electrically unconnected/isolated.
A4	NC	-	-	No connect. Leave the pin electrically unconnected/isolated.
A5	GNDA	-	Power	The ground reference for the analog circuits (Analog Comparators, etc.). These are separated from GND to minimize the electrical noise contained on VDD from affecting the analog functions.
A6	PB4	I/O	TTL	GPIO port B bit 4.
	C0-	I	Analog	Analog comparator 0 negative input.
A7	PB6	I/O	TTL	GPIO port B bit 6.
	C0+	I	Analog	Analog comparator 0 positive input.
A8	PB7	I/O	TTL	GPIO port B bit 7.
	TRST	I	TTL	JTAG TRST.
A9	PC0	I/O	TTL	GPIO port C bit 0.
	SWCLK	I	TTL	JTAG/SWD CLK.
	TCK	I	TTL	JTAG/SWD CLK.
A10	PC3	I/O	TTL	GPIO port C bit 3.
	SWO	O	TTL	JTAG TDO and SWO.
	TDO	O	TTL	JTAG TDO and SWO.
A11	PE0	I/O	TTL	GPIO port E bit 0.
	SSI1Clk	I/O	TTL	SSI module 1 clock.
A12	PE3	I/O	TTL	GPIO port E bit 3.
	SSI1Tx	O	TTL	SSI module 1 transmit.
B1	NC	-	-	No connect. Leave the pin electrically unconnected/isolated.
B2	NC	-	-	No connect. Leave the pin electrically unconnected/isolated.
B3	NC	-	-	No connect. Leave the pin electrically unconnected/isolated.
B4	NC	-	-	No connect. Leave the pin electrically unconnected/isolated.
B5	GNDA	-	Power	The ground reference for the analog circuits (Analog Comparators, etc.). These are separated from GND to minimize the electrical noise contained on VDD from affecting the analog functions.
B6	GND	-	Power	Ground reference for logic and I/O pins.
B7	PB5	I/O	TTL	GPIO port B bit 5.
	C1-	I	Analog	Analog comparator 1 negative input.
B8	PC2	I/O	TTL	GPIO port C bit 2.
	TDI	I	TTL	JTAG TDI.
B9	PC1	I/O	TTL	GPIO port C bit 1.
	SWDIO	I/O	TTL	JTAG TMS and SWDIO.
	TMS	I/O	TTL	JTAG TMS and SWDIO.
B10	CMOD1	I	TTL	CPU Mode bit 1. Input must be set to logic 0 (grounded); other encodings reserved.

Table 17-5. Signals by Pin Number *(continued)*

Pin Number	Pin Name	Pin Type	Buffer Type[a]	Description
B11	PE2	I/O	TTL	GPIO port E bit 2.
	SSI1Rx	I	TTL	SSI module 1 receive.
B12	PE1	I/O	TTL	GPIO port E bit 1.
	SSI1Fss	I/O	TTL	SSI module 1 frame.
C1	PE7	I/O	TTL	GPIO port E bit 7.
C2	PE6	I/O	TTL	GPIO port E bit 6.
	C1o	O	TTL	Analog comparator 1 output.
C3	VDD25	-	Power	Positive supply for most of the logic function, including the processor core and most peripherals.
C4	GND	-	Power	Ground reference for logic and I/O pins.
C5	GND	-	Power	Ground reference for logic and I/O pins.
C6	VDDA	-	Power	The positive supply (3.3 V) for the analog circuits (ADC, Analog Comparators, etc.). These are separated from VDD to minimize the electrical noise contained on VDD from affecting the analog functions. VDDA pins must be connected to 3.3 V, regardless of system implementation.
C7	VDDA	-	Power	The positive supply (3.3 V) for the analog circuits (ADC, Analog Comparators, etc.). These are separated from VDD to minimize the electrical noise contained on VDD from affecting the analog functions. VDDA pins must be connected to 3.3 V, regardless of system implementation.
C8	PH1	I/O	TTL	GPIO port H bit 1.
	CCP7	I/O	TTL	Capture/Compare/PWM 7.
C9	PH0	I/O	TTL	GPIO port H bit 0.
	CCP6	I/O	TTL	Capture/Compare/PWM 6.
C10	PG7	I/O	TTL	GPIO port G bit 7.
C11	PB2	I/O	TTL	GPIO port B bit 2.
	I2C0SCL	I/O	OD	I^2C module 0 clock.
C12	PB3	I/O	TTL	GPIO port B bit 3.
	I2C0SDA	I/O	OD	I^2C module 0 data.
D1	PE4	I/O	TTL	GPIO port E bit 4.
D2	PE5	I/O	TTL	GPIO port E bit 5.
D3	VDD25	-	Power	Positive supply for most of the logic function, including the processor core and most peripherals.
D10	PH3	I/O	TTL	GPIO port H bit 3.
D11	PH2	I/O	TTL	GPIO port H bit 2.
D12	PB1	I/O	TTL	GPIO port B bit 1.
	CCP2	I/O	TTL	Capture/Compare/PWM 2.
E1	PD4	I/O	TTL	GPIO port D bit 4.
E2	PD5	I/O	TTL	GPIO port D bit 5.
E3	LDO	-	Power	Low drop-out regulator output voltage. This pin requires an external capacitor between the pin and GND of 1 µF or greater. When the on-chip LDO is used to provide power to the logic, the LDO pin must also be connected to the VDD25 pins at the board level in addition to the decoupling capacitor(s).

Table 17-5. Signals by Pin Number *(continued)*

Pin Number	Pin Name	Pin Type	Buffer Type[a]	Description
E10	VDD33	-	Power	Positive supply for I/O and some logic.
E11	CMOD0	I	TTL	CPU Mode bit 0. Input must be set to logic 0 (grounded); other encodings reserved.
E12	PB0	I/O	TTL	GPIO port B bit 0.
	CCP0	I/O	TTL	Capture/Compare/PWM 0.
F1	PD7	I/O	TTL	GPIO port D bit 7.
	CCP1	I/O	TTL	Capture/Compare/PWM 1.
F2	PD6	I/O	TTL	GPIO port D bit 6.
F3	VDD25	-	Power	Positive supply for most of the logic function, including the processor core and most peripherals.
F10	GND	-	Power	Ground reference for logic and I/O pins.
F11	GND	-	Power	Ground reference for logic and I/O pins.
F12	GND	-	Power	Ground reference for logic and I/O pins.
G1	PD0	I/O	TTL	GPIO port D bit 0.
	CAN0Rx	I	TTL	CAN module 0 receive.
G2	PD1	I/O	TTL	GPIO port D bit 1.
	CAN0Tx	O	TTL	CAN module 0 transmit.
G3	VDD25	-	Power	Positive supply for most of the logic function, including the processor core and most peripherals.
G10	VDD33	-	Power	Positive supply for I/O and some logic.
G11	VDD33	-	Power	Positive supply for I/O and some logic.
G12	VDD33	-	Power	Positive supply for I/O and some logic.
H1	PD3	I/O	TTL	GPIO port D bit 3.
	U1Tx	O	TTL	UART module 1 transmit. When in IrDA mode, this signal has IrDA modulation.
H2	PD2	I/O	TTL	GPIO port D bit 2.
	U1Rx	I	TTL	UART module 1 receive. When in IrDA mode, this signal has IrDA modulation.
H3	GND	-	Power	Ground reference for logic and I/O pins.
H10	VDD33	-	Power	Positive supply for I/O and some logic.
H11	$\overline{\text{RST}}$	I	TTL	System reset input.
H12	PF1	I/O	TTL	GPIO port F bit 1.
J1	PG2	I/O	TTL	GPIO port G bit 2.
J2	PG3	I/O	TTL	GPIO port G bit 3.
J3	GND	-	Power	Ground reference for logic and I/O pins.
J10	GND	-	Power	Ground reference for logic and I/O pins.
J11	PF2	I/O	TTL	GPIO port F bit 2.
J12	PF3	I/O	TTL	GPIO port F bit 3.
K1	PG0	I/O	TTL	GPIO port G bit 0.
	U2Rx	I	TTL	UART module 2 receive. When in IrDA mode, this signal has IrDA modulation.

Table 17-5. Signals by Pin Number *(continued)*

Pin Number	Pin Name	Pin Type	Buffer Type[a]	Description
K2	PG1	I/O	TTL	GPIO port G bit 1.
	U2Tx	O	TTL	UART module 2 transmit. When in IrDA mode, this signal has IrDA modulation.
K3	PG4	I/O	TTL	GPIO port G bit 4.
K4	PF7	I/O	TTL	GPIO port F bit 7.
K5	GND	-	Power	Ground reference for logic and I/O pins.
K6	GND	-	Power	Ground reference for logic and I/O pins.
K7	VDD33	-	Power	Positive supply for I/O and some logic.
K8	VDD33	-	Power	Positive supply for I/O and some logic.
K9	VDD33	-	Power	Positive supply for I/O and some logic.
K10	GND	-	Power	Ground reference for logic and I/O pins.
K11	XOSC0	I	Analog	Hibernation module oscillator crystal input or an external clock reference input. Note that this is either a crystal or a 32.768-kHz oscillator for the Hibernation module RTC.
K12	XOSC1	O	Analog	Hibernation module oscillator crystal output. Leave unconnected when using a single-ended clock source.
L1	PC4	I/O	TTL	GPIO port C bit 4.
	CCP5	I/O	TTL	Capture/Compare/PWM 5.
L2	PC7	I/O	TTL	GPIO port C bit 7.
	CCP4	I/O	TTL	Capture/Compare/PWM 4.
L3	PA0	I/O	TTL	GPIO port A bit 0.
	U0Rx	I	TTL	UART module 0 receive. When in IrDA mode, this signal has IrDA modulation.
L4	PA3	I/O	TTL	GPIO port A bit 3.
	SSI0Fss	I/O	TTL	SSI module 0 frame.
L5	PA4	I/O	TTL	GPIO port A bit 4.
	SSI0Rx	I	TTL	SSI module 0 receive.
L6	PA6	I/O	TTL	GPIO port A bit 6.
	I2C1SCL	I/O	OD	I^2C module 1 clock.
L7	PG6	I/O	TTL	GPIO port G bit 6.
L8	PF5	I/O	TTL	GPIO port F bit 5.
L9	PF4	I/O	TTL	GPIO port F bit 4.
	C0o	O	TTL	Analog comparator 0 output.
L10	GND	-	Power	Ground reference for logic and I/O pins.
L11	OSC0	I	Analog	Main oscillator crystal input or an external clock reference input.
L12	VBAT	-	Power	Power source for the Hibernation module. It is normally connected to the positive terminal of a battery and serves as the battery backup/Hibernation module power-source supply.
M1	PC5	I/O	TTL	GPIO port C bit 5.
	C1+	I	Analog	Analog comparator 1 positive input.
M2	PC6	I/O	TTL	GPIO port C bit 6.
	CCP3	I/O	TTL	Capture/Compare/PWM 3.

Table 17-5. Signals by Pin Number *(continued)*

Pin Number	Pin Name	Pin Type	Buffer Type[a]	Description
M3	PA1	I/O	TTL	GPIO port A bit 1.
	U0Tx	O	TTL	UART module 0 transmit. When in IrDA mode, this signal has IrDA modulation.
M4	PA2	I/O	TTL	GPIO port A bit 2.
	SSI0Clk	I/O	TTL	SSI module 0 clock.
M5	PA5	I/O	TTL	GPIO port A bit 5.
	SSI0Tx	O	TTL	SSI module 0 transmit.
M6	PA7	I/O	TTL	GPIO port A bit 7.
	I2C1SDA	I/O	OD	I^2C module 1 data.
M7	PG5	I/O	TTL	GPIO port G bit 5.
M8	PF6	I/O	TTL	GPIO port F bit 6.
M9	PF0	I/O	TTL	GPIO port F bit 0.
M10	$\overline{\text{WAKE}}$	I	TTL	An external input that brings the processor out of Hibernate mode when asserted.
M11	OSC1	O	Analog	Main oscillator crystal output. Leave unconnected when using a single-ended clock source.
M12	$\overline{\text{HIB}}$	O	OD	An open-drain output with internal pull-up that indicates the processor is in Hibernate mode.

a. The TTL designation indicates the pin has TTL-compatible voltage levels.

Table 17-6. Signals by Signal Name

Pin Name	Pin Number	Pin Type	Buffer Type[a]	Description
C0+	A7	I	Analog	Analog comparator 0 positive input.
C0-	A6	I	Analog	Analog comparator 0 negative input.
C0o	L9	O	TTL	Analog comparator 0 output.
C1+	M1	I	Analog	Analog comparator 1 positive input.
C1-	B7	I	Analog	Analog comparator 1 negative input.
C1o	C2	O	TTL	Analog comparator 1 output.
CAN0Rx	G1	I	TTL	CAN module 0 receive.
CAN0Tx	G2	O	TTL	CAN module 0 transmit.
CCP0	E12	I/O	TTL	Capture/Compare/PWM 0.
CCP1	F1	I/O	TTL	Capture/Compare/PWM 1.
CCP2	D12	I/O	TTL	Capture/Compare/PWM 2.
CCP3	M2	I/O	TTL	Capture/Compare/PWM 3.
CCP4	L2	I/O	TTL	Capture/Compare/PWM 4.
CCP5	L1	I/O	TTL	Capture/Compare/PWM 5.
CCP6	C9	I/O	TTL	Capture/Compare/PWM 6.
CCP7	C8	I/O	TTL	Capture/Compare/PWM 7.
CMOD0	E11	I	TTL	CPU Mode bit 0. Input must be set to logic 0 (grounded); other encodings reserved.
CMOD1	B10	I	TTL	CPU Mode bit 1. Input must be set to logic 0 (grounded); other encodings reserved.

Table 17-6. Signals by Signal Name *(continued)*

Pin Name	Pin Number	Pin Type	Buffer Type[a]	Description
GND	B6 C4 C5 F10 F11 F12 H3 J3 J10 K5 K6 K10 L10	-	Power	Ground reference for logic and I/O pins.
GNDA	A5 B5	-	Power	The ground reference for the analog circuits (Analog Comparators, etc.). These are separated from GND to minimize the electrical noise contained on VDD from affecting the analog functions.
$\overline{\text{HIB}}$	M12	O	OD	An open-drain output with internal pull-up that indicates the processor is in Hibernate mode.
I2C0SCL	C11	I/O	OD	I^2C module 0 clock.
I2C0SDA	C12	I/O	OD	I^2C module 0 data.
I2C1SCL	L6	I/O	OD	I^2C module 1 clock.
I2C1SDA	M6	I/O	OD	I^2C module 1 data.
LDO	E3	-	Power	Low drop-out regulator output voltage. This pin requires an external capacitor between the pin and GND of 1 µF or greater. When the on-chip LDO is used to provide power to the logic, the LDO pin must also be connected to the VDD25 pins at the board level in addition to the decoupling capacitor(s).
NC	A1 A2 A3 A4 B1 B2 B3 B4	-	-	No connect. Leave the pin electrically unconnected/isolated.
OSC0	L11	I	Analog	Main oscillator crystal input or an external clock reference input.
OSC1	M11	O	Analog	Main oscillator crystal output. Leave unconnected when using a single-ended clock source.
PA0	L3	I/O	TTL	GPIO port A bit 0.
PA1	M3	I/O	TTL	GPIO port A bit 1.
PA2	M4	I/O	TTL	GPIO port A bit 2.
PA3	L4	I/O	TTL	GPIO port A bit 3.
PA4	L5	I/O	TTL	GPIO port A bit 4.
PA5	M5	I/O	TTL	GPIO port A bit 5.
PA6	L6	I/O	TTL	GPIO port A bit 6.
PA7	M6	I/O	TTL	GPIO port A bit 7.
PB0	E12	I/O	TTL	GPIO port B bit 0.

Table 17-6. Signals by Signal Name *(continued)*

Pin Name	Pin Number	Pin Type	Buffer Type[a]	Description
PB1	D12	I/O	TTL	GPIO port B bit 1.
PB2	C11	I/O	TTL	GPIO port B bit 2.
PB3	C12	I/O	TTL	GPIO port B bit 3.
PB4	A6	I/O	TTL	GPIO port B bit 4.
PB5	B7	I/O	TTL	GPIO port B bit 5.
PB6	A7	I/O	TTL	GPIO port B bit 6.
PB7	A8	I/O	TTL	GPIO port B bit 7.
PC0	A9	I/O	TTL	GPIO port C bit 0.
PC1	B9	I/O	TTL	GPIO port C bit 1.
PC2	B8	I/O	TTL	GPIO port C bit 2.
PC3	A10	I/O	TTL	GPIO port C bit 3.
PC4	L1	I/O	TTL	GPIO port C bit 4.
PC5	M1	I/O	TTL	GPIO port C bit 5.
PC6	M2	I/O	TTL	GPIO port C bit 6.
PC7	L2	I/O	TTL	GPIO port C bit 7.
PD0	G1	I/O	TTL	GPIO port D bit 0.
PD1	G2	I/O	TTL	GPIO port D bit 1.
PD2	H2	I/O	TTL	GPIO port D bit 2.
PD3	H1	I/O	TTL	GPIO port D bit 3.
PD4	E1	I/O	TTL	GPIO port D bit 4.
PD5	E2	I/O	TTL	GPIO port D bit 5.
PD6	F2	I/O	TTL	GPIO port D bit 6.
PD7	F1	I/O	TTL	GPIO port D bit 7.
PE0	A11	I/O	TTL	GPIO port E bit 0.
PE1	B12	I/O	TTL	GPIO port E bit 1.
PE2	B11	I/O	TTL	GPIO port E bit 2.
PE3	A12	I/O	TTL	GPIO port E bit 3.
PE4	D1	I/O	TTL	GPIO port E bit 4.
PE5	D2	I/O	TTL	GPIO port E bit 5.
PE6	C2	I/O	TTL	GPIO port E bit 6.
PE7	C1	I/O	TTL	GPIO port E bit 7.
PF0	M9	I/O	TTL	GPIO port F bit 0.
PF1	H12	I/O	TTL	GPIO port F bit 1.
PF2	J11	I/O	TTL	GPIO port F bit 2.
PF3	J12	I/O	TTL	GPIO port F bit 3.
PF4	L9	I/O	TTL	GPIO port F bit 4.
PF5	L8	I/O	TTL	GPIO port F bit 5.
PF6	M8	I/O	TTL	GPIO port F bit 6.
PF7	K4	I/O	TTL	GPIO port F bit 7.
PG0	K1	I/O	TTL	GPIO port G bit 0.
PG1	K2	I/O	TTL	GPIO port G bit 1.

Table 17-6. Signals by Signal Name *(continued)*

Pin Name	Pin Number	Pin Type	Buffer Type[a]	Description
PG2	J1	I/O	TTL	GPIO port G bit 2.
PG3	J2	I/O	TTL	GPIO port G bit 3.
PG4	K3	I/O	TTL	GPIO port G bit 4.
PG5	M7	I/O	TTL	GPIO port G bit 5.
PG6	L7	I/O	TTL	GPIO port G bit 6.
PG7	C10	I/O	TTL	GPIO port G bit 7.
PH0	C9	I/O	TTL	GPIO port H bit 0.
PH1	C8	I/O	TTL	GPIO port H bit 1.
PH2	D11	I/O	TTL	GPIO port H bit 2.
PH3	D10	I/O	TTL	GPIO port H bit 3.
RST	H11	I	TTL	System reset input.
SSI0Clk	M4	I/O	TTL	SSI module 0 clock.
SSI0Fss	L4	I/O	TTL	SSI module 0 frame.
SSI0Rx	L5	I	TTL	SSI module 0 receive.
SSI0Tx	M5	O	TTL	SSI module 0 transmit.
SSI1Clk	A11	I/O	TTL	SSI module 1 clock.
SSI1Fss	B12	I/O	TTL	SSI module 1 frame.
SSI1Rx	B11	I	TTL	SSI module 1 receive.
SSI1Tx	A12	O	TTL	SSI module 1 transmit.
SWCLK	A9	I	TTL	JTAG/SWD CLK.
SWDIO	B9	I/O	TTL	JTAG TMS and SWDIO.
SWO	A10	O	TTL	JTAG TDO and SWO.
TCK	A9	I	TTL	JTAG/SWD CLK.
TDI	B8	I	TTL	JTAG TDI.
TDO	A10	O	TTL	JTAG TDO and SWO.
TMS	B9	I/O	TTL	JTAG TMS and SWDIO.
TRST	A8	I	TTL	JTAG TRST.
U0Rx	L3	I	TTL	UART module 0 receive. When in IrDA mode, this signal has IrDA modulation.
U0Tx	M3	O	TTL	UART module 0 transmit. When in IrDA mode, this signal has IrDA modulation.
U1Rx	H2	I	TTL	UART module 1 receive. When in IrDA mode, this signal has IrDA modulation.
U1Tx	H1	O	TTL	UART module 1 transmit. When in IrDA mode, this signal has IrDA modulation.
U2Rx	K1	I	TTL	UART module 2 receive. When in IrDA mode, this signal has IrDA modulation.
U2Tx	K2	O	TTL	UART module 2 transmit. When in IrDA mode, this signal has IrDA modulation.
VBAT	L12	-	Power	Power source for the Hibernation module. It is normally connected to the positive terminal of a battery and serves as the battery backup/Hibernation module power-source supply.

Table 17-6. Signals by Signal Name *(continued)*

Pin Name	Pin Number	Pin Type	Buffer Type[a]	Description
VDD25	C3 D3 F3 G3	-	Power	Positive supply for most of the logic function, including the processor core and most peripherals.
VDD33	E10 G10 G11 G12 H10 K7 K8 K9	-	Power	Positive supply for I/O and some logic.
VDDA	C6 C7	-	Power	The positive supply (3.3 V) for the analog circuits (ADC, Analog Comparators, etc.). These are separated from VDD to minimize the electrical noise contained on VDD from affecting the analog functions. VDDA pins must be connected to 3.3 V, regardless of system implementation.
$\overline{\text{WAKE}}$	M10	I	TTL	An external input that brings the processor out of Hibernate mode when asserted.
XOSC0	K11	I	Analog	Hibernation module oscillator crystal input or an external clock reference input. Note that this is either a crystal or a 32.768-kHz oscillator for the Hibernation module RTC.
XOSC1	K12	O	Analog	Hibernation module oscillator crystal output. Leave unconnected when using a single-ended clock source.

a. The TTL designation indicates the pin has TTL-compatible voltage levels.

Table 17-7. Signals by Function, Except for GPIO

Function	Pin Name	Pin Number	Pin Type	Buffer Type[a]	Description
Analog Comparators	C0+	A7	I	Analog	Analog comparator 0 positive input.
	C0-	A6	I	Analog	Analog comparator 0 negative input.
	C0o	L9	O	TTL	Analog comparator 0 output.
	C1+	M1	I	Analog	Analog comparator 1 positive input.
	C1-	B7	I	Analog	Analog comparator 1 negative input.
	C1o	C2	O	TTL	Analog comparator 1 output.
Controller Area Network	CAN0Rx	G1	I	TTL	CAN module 0 receive.
	CAN0Tx	G2	O	TTL	CAN module 0 transmit.
General-Purpose Timers	CCP0	E12	I/O	TTL	Capture/Compare/PWM 0.
	CCP1	F1	I/O	TTL	Capture/Compare/PWM 1.
	CCP2	D12	I/O	TTL	Capture/Compare/PWM 2.
	CCP3	M2	I/O	TTL	Capture/Compare/PWM 3.
	CCP4	L2	I/O	TTL	Capture/Compare/PWM 4.
	CCP5	L1	I/O	TTL	Capture/Compare/PWM 5.
	CCP6	C9	I/O	TTL	Capture/Compare/PWM 6.
	CCP7	C8	I/O	TTL	Capture/Compare/PWM 7.

Table 17-7. Signals by Function, Except for GPIO *(continued)*

Function	Pin Name	Pin Number	Pin Type	Buffer Type[a]	Description
Hibernate	HIB	M12	O	OD	An open-drain output with internal pull-up that indicates the processor is in Hibernate mode.
	VBAT	L12	-	Power	Power source for the Hibernation module. It is normally connected to the positive terminal of a battery and serves as the battery backup/Hibernation module power-source supply.
	WAKE	M10	I	TTL	An external input that brings the processor out of Hibernate mode when asserted.
	XOSC0	K11	I	Analog	Hibernation module oscillator crystal input or an external clock reference input. Note that this is either a crystal or a 32.768-kHz oscillator for the Hibernation module RTC.
	XOSC1	K12	O	Analog	Hibernation module oscillator crystal output. Leave unconnected when using a single-ended clock source.
I2C	I2C0SCL	C11	I/O	OD	I^2C module 0 clock.
	I2C0SDA	C12	I/O	OD	I^2C module 0 data.
	I2C1SCL	L6	I/O	OD	I^2C module 1 clock.
	I2C1SDA	M6	I/O	OD	I^2C module 1 data.
JTAG/SWD/SWO	SWCLK	A9	I	TTL	JTAG/SWD CLK.
	SWDIO	B9	I/O	TTL	JTAG TMS and SWDIO.
	SWO	A10	O	TTL	JTAG TDO and SWO.
	TCK	A9	I	TTL	JTAG/SWD CLK.
	TDI	B8	I	TTL	JTAG TDI.
	TDO	A10	O	TTL	JTAG TDO and SWO.
	TMS	B9	I/O	TTL	JTAG TMS and SWDIO.
	TRST	A8	I	TTL	JTAG TRST.

Table 17-7. Signals by Function, Except for GPIO *(continued)*

Function	Pin Name	Pin Number	Pin Type	Buffer Type[a]	Description
Power	GND	B6 C4 C5 F10 F11 F12 H3 J3 J10 K5 K6 K10 L10	-	Power	Ground reference for logic and I/O pins.
	GNDA	A5 B5	-	Power	The ground reference for the analog circuits (Analog Comparators, etc.). These are separated from GND to minimize the electrical noise contained on VDD from affecting the analog functions.
	LDO	E3	-	Power	Low drop-out regulator output voltage. This pin requires an external capacitor between the pin and GND of 1 µF or greater. When the on-chip LDO is used to provide power to the logic, the LDO pin must also be connected to the VDD25 pins at the board level in addition to the decoupling capacitor(s).
	VDD25	C3 D3 F3 G3	-	Power	Positive supply for most of the logic function, including the processor core and most peripherals.
	VDD33	E10 G10 G11 G12 H10 K7 K8 K9	-	Power	Positive supply for I/O and some logic.
	VDDA	C6 C7	-	Power	The positive supply (3.3 V) for the analog circuits (ADC, Analog Comparators, etc.). These are separated from VDD to minimize the electrical noise contained on VDD from affecting the analog functions. VDDA pins must be connected to 3.3 V, regardless of system implementation.
SSI	SSI0Clk	M4	I/O	TTL	SSI module 0 clock.
	SSI0Fss	L4	I/O	TTL	SSI module 0 frame.
	SSI0Rx	L5	I	TTL	SSI module 0 receive.
	SSI0Tx	M5	O	TTL	SSI module 0 transmit.
	SSI1Clk	A11	I/O	TTL	SSI module 1 clock.
	SSI1Fss	B12	I/O	TTL	SSI module 1 frame.
	SSI1Rx	B11	I	TTL	SSI module 1 receive.
	SSI1Tx	A12	O	TTL	SSI module 1 transmit.

Table 17-7. Signals by Function, Except for GPIO *(continued)*

Function	Pin Name	Pin Number	Pin Type	Buffer Type[a]	Description
System Control & Clocks	CMOD0	E11	I	TTL	CPU Mode bit 0. Input must be set to logic 0 (grounded); other encodings reserved.
	CMOD1	B10	I	TTL	CPU Mode bit 1. Input must be set to logic 0 (grounded); other encodings reserved.
	OSC0	L11	I	Analog	Main oscillator crystal input or an external clock reference input.
	OSC1	M11	O	Analog	Main oscillator crystal output. Leave unconnected when using a single-ended clock source.
	RST	H11	I	TTL	System reset input.
UART	U0Rx	L3	I	TTL	UART module 0 receive. When in IrDA mode, this signal has IrDA modulation.
	U0Tx	M3	O	TTL	UART module 0 transmit. When in IrDA mode, this signal has IrDA modulation.
	U1Rx	H2	I	TTL	UART module 1 receive. When in IrDA mode, this signal has IrDA modulation.
	U1Tx	H1	O	TTL	UART module 1 transmit. When in IrDA mode, this signal has IrDA modulation.
	U2Rx	K1	I	TTL	UART module 2 receive. When in IrDA mode, this signal has IrDA modulation.
	U2Tx	K2	O	TTL	UART module 2 transmit. When in IrDA mode, this signal has IrDA modulation.

a. The TTL designation indicates the pin has TTL-compatible voltage levels.

Table 17-8. GPIO Pins and Alternate Functions

IO	Pin Number	Multiplexed Function	Multiplexed Function
PA0	L3	U0Rx	
PA1	M3	U0Tx	
PA2	M4	SSI0Clk	
PA3	L4	SSI0Fss	
PA4	L5	SSI0Rx	
PA5	M5	SSI0Tx	
PA6	L6	I2C1SCL	
PA7	M6	I2C1SDA	
PB0	E12	CCP0	
PB1	D12	CCP2	
PB2	C11	I2C0SCL	
PB3	C12	I2C0SDA	
PB4	A6	C0-	
PB5	B7	C1-	
PB6	A7	C0+	
PB7	A8	TRST	
PC0	A9	TCK	SWCLK
PC1	B9	TMS	SWDIO
PC2	B8	TDI	
PC3	A10	TDO	SWO

Table 17-8. GPIO Pins and Alternate Functions *(continued)*

IO	Pin Number	Multiplexed Function	Multiplexed Function
PC4	L1	CCP5	
PC5	M1	C1+	
PC6	M2	CCP3	
PC7	L2	CCP4	
PD0	G1	CAN0Rx	
PD1	G2	CAN0Tx	
PD2	H2	U1Rx	
PD3	H1	U1Tx	
PD4	E1		
PD5	E2		
PD6	F2		
PD7	F1	CCP1	
PE0	A11	SSI1Clk	
PE1	B12	SSI1Fss	
PE2	B11	SSI1Rx	
PE3	A12	SSI1Tx	
PE4	D1		
PE5	D2		
PE6	C2	C1o	
PE7	C1		
PF0	M9		
PF1	H12		
PF2	J11		
PF3	J12		
PF4	L9	C0o	
PF5	L8		
PF6	M8		
PF7	K4		
PG0	K1	U2Rx	
PG1	K2	U2Tx	
PG2	J1		
PG3	J2		
PG4	K3		
PG5	M7		
PG6	L7		
PG7	C10		
PH0	C9	CCP6	
PH1	C8	CCP7	
PH2	D11		
PH3	D10		

17.3 Connections for Unused Signals

Table 17-9 on page 592 show how to handle signals for functions that are not used in a particular system implementation for devices that are in a 100-pin LQFP package. Two options are shown in the table: an acceptable practice and a preferred practice for reduced power consumption and improved EMC characteristics. If a module is not used in a system, and its inputs are grounded, it is important that the clock to the module is never enabled by setting the corresponding bit in the **RCGCx** register.

Table 17-9. Connections for Unused Signals (100-pin LQFP)

Function	Signal Name	Pin Number	Acceptable Practice	Preferred Practice
GPIO	All unused GPIOs	-	NC	GND
Hibernate	HIB	51	NC	NC
	VBAT	55	NC	GND
	WAKE	50	NC	GND
	XOSC0	52	NC	GND
	XOSC1	53	NC	NC
No Connects	NC	-	NC	NC
System Control	OSC0	48	NC	GND
	OSC1	49	NC	NC
	RST	64	Pull up as shown in Figure 5-1 on page 167	Connect through a capacitor to GND as close to pin as possible

Table 17-10 on page 592 show how to handle signals for functions that are not used in a particular system implementation for devices that are in a 108-pin BGA package. Two options are shown in the table: an acceptable practice and a preferred practice for reduced power consumption and improved EMC characteristics. If a module is not used in a system, and its inputs are grounded, it is important that the clock to the module is never enabled by setting the corresponding bit in the **RCGCx** register.

Table 17-10. Connections for Unused Signals, 108-pin BGA

Function	Signal Name	Pin Number	Acceptable Practice	Preferred Practice
GPIO	All unused GPIOs	-	NC	GND
Hibernate	HIB	M12	NC	NC
	VBAT	L12	NC	GND
	WAKE	M10	NC	GND
	XOSC0	K11	NC	GND
	XOSC1	K12	NC	NC
No Connects	NC	-	NC	NC
System Control	OSC0	L11	NC	GND
	OSC1	M11	NC	NC
	RST	H11	Pull up as shown in Figure 5-1 on page 167	Connect through a capacitor to GND as close to pin as possible

18 Operating Characteristics

Table 18-1. Temperature Characteristics

Characteristic	Symbol	Value	Unit
Industrial operating temperature range	T_A	-40 to +85	°C
Extended operating temperature range	T_A	-40 to +105	°C
Unpowered storage temperature range	T_S	-65 to +150	°C

Table 18-2. Thermal Characteristics

Characteristic	Symbol	Value	Unit
Thermal resistance (junction to ambient)[a]	Θ_{JA}	32	°C/W
Junction temperature[b]	T_J	$T_A + (P \cdot \Theta_{JA})$	°C

a. Junction to ambient thermal resistance θ_{JA} numbers are determined by a package simulator.

b. Power dissipation is a function of temperature.

Table 18-3. ESD Absolute Maximum Ratings[a]

Parameter Name	Min	Nom	Max	Unit
V_{ESDHBM}	-	-	2.0	kV
V_{ESDCDM}	-	-	1.0	kV
V_{ESDMM}	-	-	100	V

a. All Stellaris parts are ESD tested following the JEDEC standard.

19 Electrical Characteristics

19.1 DC Characteristics

19.1.1 Maximum Ratings

The maximum ratings are the limits to which the device can be subjected without permanently damaging the device.

Note: The device is not guaranteed to operate properly at the maximum ratings.

Table 19-1. Maximum Ratings

Characteristic[a]	Symbol	Value		Unit
		Min	Max	
I/O supply voltage (V_{DD})	V_{DD}	0	4	V
Core supply voltage (V_{DD25})	V_{DD25}	0	3	V
Analog supply voltage (V_{DDA})	V_{DDA}	0	4	V
Battery supply voltage (V_{BAT})	V_{BAT}	0	4	V
Input voltage	V_{IN}	-0.3	5.5	V
Input voltage for a GPIO configured as an analog input		-0.3	V_{DD} + 0.3	V
Maximum current per output pins	I	-	25	mA
Maximum input voltage on a non-power pin when the microcontroller is unpowered	V_{NON}	-	300	mV

a. Voltages are measured with respect to GND.

Important: This device contains circuitry to protect the inputs against damage due to high-static voltages or electric fields; however, it is advised that normal precautions be taken to avoid application of any voltage higher than maximum-rated voltages to this high-impedance circuit. Reliability of operation is enhanced if unused inputs are connected to an appropriate logic voltage level (for example, either GND or V_{DD}).

19.1.2 Recommended DC Operating Conditions

For special high-current applications, the GPIO output buffers may be used with the following restrictions. With the GPIO pins configured as 8-mA output drivers, a total of four GPIO outputs may be used to sink current loads up to 18 mA each. At 18-mA sink current loading, the V_{OL} value is specified as 1.2 V. The high-current GPIO package pins must be selected such that there are only a maximum of two per side of the physical package or BGA pin group with the total number of high-current GPIO outputs not exceeding four for the entire package.

Table 19-2. Recommended DC Operating Conditions

Parameter	Parameter Name	Min	Nom	Max	Unit
V_{DD}	I/O supply voltage	3.0	3.3	3.6	V
V_{DD25}	Core supply voltage	2.25	2.5	2.75	V
V_{DDA}	Analog supply voltage	3.0	3.3	3.6	V
V_{BAT}	Battery supply voltage	2.3	3.0	3.6	V
V_{IH}	High-level input voltage	2.0	-	5.0	V
V_{IL}	Low-level input voltage	-0.3	-	1.3	V

Table 19-2. Recommended DC Operating Conditions *(continued)*

Parameter	Parameter Name	Min	Nom	Max	Unit
V_{OH}[a]	High-level output voltage	2.4	-	-	V
V_{OL}[a]	Low-level output voltage	-	-	0.4	V
I_{OH}	High-level source current, V_{OH}=2.4 V				
	2-mA Drive	2.0	-	-	mA
	4-mA Drive	4.0	-	-	mA
	8-mA Drive	8.0	-	-	mA
I_{OL}	Low-level sink current, V_{OL}=0.4 V				
	2-mA Drive	2.0	-	-	mA
	4-mA Drive	4.0	-	-	mA
	8-mA Drive	8.0	-	-	mA

a. V_{OL} and V_{OH} shift to 1.2 V when using high-current GPIOs.

19.1.3 On-Chip Low Drop-Out (LDO) Regulator Characteristics

Table 19-3. LDO Regulator Characteristics

Parameter	Parameter Name	Min	Nom	Max	Unit
V_{LDOOUT}	Programmable internal (logic) power supply output value	2.25	2.5	2.75	V
	Output voltage accuracy	-	2%	-	%
t_{PON}	Power-on time	-	-	100	µs
t_{ON}	Time on	-	-	200	µs
t_{OFF}	Time off	-	-	100	µs
V_{STEP}	Step programming incremental voltage	-	50	-	mV
C_{LDO}	External filter capacitor size for internal power supply	1.0	-	3.0	µF

19.1.4 GPIO Module Characteristics

Table 19-4. GPIO Module DC Characteristics

Parameter	Parameter Name	Min	Nom	Max	Unit
R_{GPIOPU}	GPIO internal pull-up resistor	50	-	110	kΩ
R_{GPIOPD}	GPIO internal pull-down resistor	55	-	180	kΩ
I_{LKG}	GPIO input leakage current[a]	-	-	2	µA

a. The leakage current is measured with GND or V_{DD} applied to the corresponding pin(s). The leakage of digital port pins is measured individually. The port pin is configured as an input and the pullup/pulldown resistor is disabled.

19.1.5 Power Specifications

The power measurements specified in the tables that follow are run on the core processor using SRAM with the following specifications (except as noted):

- V_{DD} = 3.3 V
- V_{DD25} = 2.50 V

- V_{BAT} = 3.0 V
- V_{DDA} = 3.3 V
- Temperature = 25°C
- Clock Source (MOSC) =3.579545 MHz Crystal Oscillator
- Main oscillator (MOSC) = enabled
- Internal oscillator (IOSC) = disabled

Table 19-5. Detailed Power Specifications

Parameter	Parameter Name	Conditions	3.3 V V_{DD}, V_{DDA}		2.5 V V_{DD25}		3.0 V V_{BAT}		Unit
			Nom	Max	Nom	Max	Nom	Max	
I_{DD_RUN}	Run mode 1 (Flash loop)	V_{DD25} = 2.50 V Code= while(1){} executed out of Flash Peripherals = All ON System Clock = 50 MHz (with PLL)	3	pending[a]	108	pending[a]	0	pending[a]	mA
	Run mode 2 (Flash loop)	V_{DD25} = 2.50 V Code= while(1){} executed out of Flash Peripherals = All OFF System Clock = 50 MHz (with PLL)	0	pending[a]	53	pending[a]	0	pending[a]	mA
	Run mode 1 (SRAM loop)	V_{DD25} = 2.50 V Code= while(1){} executed in SRAM Peripherals = All ON System Clock = 50 MHz (with PLL)	3	pending[a]	102	pending[a]	0	pending[a]	mA
	Run mode 2 (SRAM loop)	V_{DD25} = 2.50 V Code= while(1){} executed in SRAM Peripherals = All OFF System Clock = 50 MHz (with PLL)	0	pending[a]	47	pending[a]	0	pending[a]	mA
I_{DD_SLEEP}	Sleep mode	V_{DD25} = 2.50 V Peripherals = All OFF System Clock = 50 MHz (with PLL)	0	pending[a]	17	pending[a]	0	pending[a]	mA
$I_{DD_DEEPSLEEP}$	Deep-Sleep mode	LDO = 2.25 V Peripherals = All OFF System Clock = IOSC30KHZ/64	0.14	pending[a]	0.18	pending[a]	0	pending[a]	mA

Table 19-5. Detailed Power Specifications *(continued)*

Parameter	Parameter Name	Conditions	3.3 V V_{DD}, V_{DDA}		2.5 V V_{DD25}		3.0 V V_{BAT}		Unit
			Nom	Max	Nom	Max	Nom	Max	
$I_{DD_HIBERNATE}$	Hibernate mode	V_{BAT} = 3.0 V V_{DD} = 0 V V_{DD25} = 0 V V_{DDA} = 0 V Peripherals = All OFF System Clock = OFF Hibernate Module = 32 kHz	0	0	0	0	16	pending[a]	µA

a. Pending characterization completion.

19.1.6 Flash Memory Characteristics

Table 19-6. Flash Memory Characteristics

Parameter	Parameter Name	Min	Nom	Max	Unit
PE_{CYC}	Number of guaranteed program/erase cycles before failure[a]	10,000	100,000	-	cycles
T_{RET}	Data retention at average operating temperature of 85˚C (industrial) or 105˚C (extended)	10	-	-	years
T_{PROG}	Word program time	20	-	-	µs
T_{ERASE}	Page erase time	20	-	-	ms
T_{ME}	Mass erase time	-	-	250	ms

a. A program/erase cycle is defined as switching the bits from 1-> 0 -> 1.

19.1.7 Hibernation

Table 19-7. Hibernation Module DC Characteristics

Parameter	Parameter Name	Value	Unit
V_{LOWBAT}	Low battery detect voltage	2.35	V
R_{WAKEPU}	WAKE internal pull-up resistor	200	kΩ

19.2 AC Characteristics

19.2.1 Load Conditions

Unless otherwise specified, the following conditions are true for all timing measurements. Timing measurements are for 4-mA drive strength.

Figure 19-1. Load Conditions

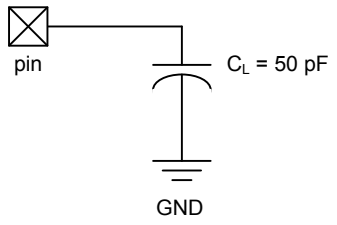

19.2.2 Clocks

Table 19-8. Phase Locked Loop (PLL) Characteristics

Parameter	Parameter Name	Min	Nom	Max	Unit
$f_{ref_crystal}$	Crystal reference[a]	3.579545	-	8.192	MHz
f_{ref_ext}	External clock reference[a]	3.579545	-	8.192	MHz
f_{pll}	PLL frequency[b]	-	400	-	MHz
T_{READY}	PLL lock time	-	-	0.5	ms

a. The exact value is determined by the crystal value programmed into the XTAL field of the **Run-Mode Clock Configuration (RCC)** register.

b. PLL frequency is automatically calculated by the hardware based on the XTAL field of the **RCC** register.

Table 19-9 on page 598 shows the actual frequency of the PLL based on the crystal frequency used (defined by the XTAL field in the **RCC** register).

Table 19-9. Actual PLL Frequency

XTAL	Crystal Frequency (MHz)	PLL Frequency (MHz)	Error
0x4	3.5795	400.904	0.0023%
0x5	3.6864	398.1312	0.0047%
0x6	4.0	400	-
0x7	4.096	401.408	0.0035%
0x8	4.9152	398.1312	0.0047%
0x9	5.0	400	-
0xA	5.12	399.36	0.0016%
0xB	6.0	400	-
0xC	6.144	399.36	0.0016%
0xD	7.3728	398.1312	0.0047%
0xE	8.0	400	0.0047%
0xF	8.192	398.6773333	0.0033%

Table 19-10. Clock Characteristics

Parameter	Parameter Name	Min	Nom	Max	Unit
f_{IOSC}	Internal 12 MHz oscillator frequency	8.4	12	15.6	MHz
$f_{IOSC30KHZ}$	Internal 30 KHz oscillator frequency	15	30	45	KHz
f_{XOSC}	Hibernation module oscillator frequency	-	4.194304	-	MHz
f_{XOSC_XTAL}	Crystal reference for hibernation oscillator	-	4.194304	-	MHz
f_{XOSC_EXT}	External clock reference for hibernation module	-	32.768	-	KHz
f_{MOSC}	Main oscillator frequency	1	-	8.192	MHz
t_{MOSC_per}	Main oscillator period	125	-	1000	ns
$f_{ref_crystal_bypass}$	Crystal reference using the main oscillator (PLL in BYPASS mode)	1	-	8.192	MHz
$f_{ref_ext_bypass}$	External clock reference (PLL in BYPASS mode)	0	-	50	MHz
f_{system_clock}	System clock	0	-	50	MHz

Table 19-11. Crystal Characteristics

Parameter Name	Value				Units
Frequency	8	6	4	3.5	MHz
Frequency tolerance	±50	±50	±50	±50	ppm
Aging	±5	±5	±5	±5	ppm/yr
Oscillation mode	Parallel	Parallel	Parallel	Parallel	-
Temperature stability (-40°C to 85°C)	±25	±25	±25	±25	ppm
Temperature stability (-40°C to 105°C)	±25	±25	±25	±25	ppm
Motional capacitance (typ)	27.8	37.0	55.6	63.5	pF
Motional inductance (typ)	14.3	19.1	28.6	32.7	mH
Equivalent series resistance (max)	120	160	200	220	Ω
Shunt capacitance (max)	10	10	10	10	pF
Load capacitance (typ)	16	16	16	16	pF
Drive level (typ)	100	100	100	100	µW

19.2.3 JTAG and Boundary Scan

Table 19-12. JTAG Characteristics

Parameter No.	Parameter	Parameter Name	Min	Nom	Max	Unit
J1	f_{TCK}	TCK operational clock frequency	0	-	10	MHz
J2	t_{TCK}	TCK operational clock period	100	-	-	ns
J3	t_{TCK_LOW}	TCK clock Low time	-	$t_{TCK}/2$	-	ns
J4	t_{TCK_HIGH}	TCK clock High time	-	$t_{TCK}/2$	-	ns
J5	t_{TCK_R}	TCK rise time	0	-	10	ns
J6	t_{TCK_F}	TCK fall time	0	-	10	ns
J7	t_{TMS_SU}	TMS setup time to TCK rise	20	-	-	ns
J8	t_{TMS_HLD}	TMS hold time from TCK rise	20	-	-	ns
J9	t_{TDI_SU}	TDI setup time to TCK rise	25	-	-	ns
J10	t_{TDI_HLD}	TDI hold time from TCK rise	25	-	-	ns
J11 t_{TDO_ZDV}	TCK fall to Data Valid from High-Z	2-mA drive	-	23	35	ns
		4-mA drive		15	26	ns
		8-mA drive		14	25	ns
		8-mA drive with slew rate control		18	29	ns
J12 t_{TDO_DV}	TCK fall to Data Valid from Data Valid	2-mA drive	-	21	35	ns
		4-mA drive		14	25	ns
		8-mA drive		13	24	ns
		8-mA drive with slew rate control		18	28	ns
J13 t_{TDO_DVZ}	TCK fall to High-Z from Data Valid	2-mA drive	-	9	11	ns
		4-mA drive		7	9	ns
		8-mA drive		6	8	ns
		8-mA drive with slew rate control		7	9	ns
J14	t_{TRST}	$\overline{TRST}$ assertion time	100	-	-	ns
J15	t_{TRST_SU}	$\overline{TRST}$ setup time to TCK rise	10	-	-	ns

Figure 19-2. JTAG Test Clock Input Timing

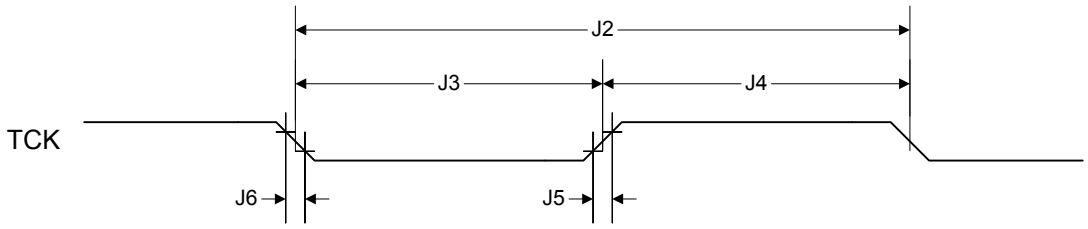

Figure 19-3. JTAG Test Access Port (TAP) Timing

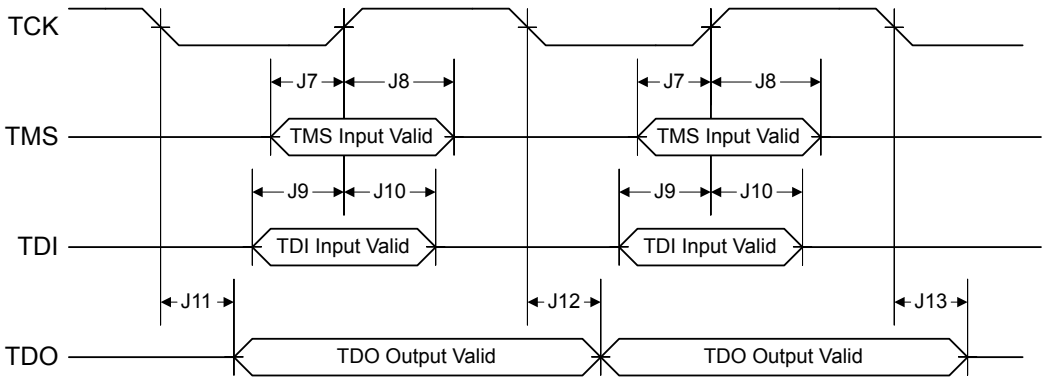

Figure 19-4. JTAG TRST Timing

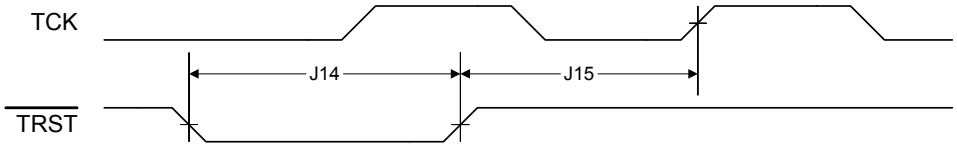

19.2.4 Reset

Table 19-13. Reset Characteristics

Parameter No.	Parameter	Parameter Name	Min	Nom	Max	Unit
R1	V_{TH}	Reset threshold	-	2.0	-	V
R2	V_{BTH}	Brown-Out threshold	2.85	2.9	2.95	V
R3	T_{POR}	Power-On Reset timeout	-	10	-	ms
R4	T_{BOR}	Brown-Out timeout	-	500	-	µs
R5	T_{IRPOR}	Internal reset timeout after POR	6	-	11	ms
R6	T_{IRBOR}	Internal reset timeout after BOR[a]	0	-	1	µs

Table 19-13. Reset Characteristics *(continued)*

Parameter No.	Parameter	Parameter Name	Min	Nom	Max	Unit
R7	T_{IRHWR}	Internal reset timeout after hardware reset ($\overline{RST}$ pin)	0	-	1	ms
R8	T_{IRSWR}	Internal reset timeout after software-initiated system reset [a]	2.5	-	20	µs
R9	T_{IRWDR}	Internal reset timeout after watchdog reset[a]	2.5	-	20	µs
R10	$T_{VDDRISE}$	Supply voltage (V_{DD}) rise time (0V-3.3V), power on reset	-	-	100	ms
		Supply voltage (V_{DD}) rise time (0V-3.3V), waking from hibernation	-	-	250	µs
R11	T_{MIN}	Minimum $\overline{RST}$ pulse width	2	-	-	µs

a. 20 * t_{MOSC_per}

Figure 19-5. External Reset Timing ($\overline{RST}$)

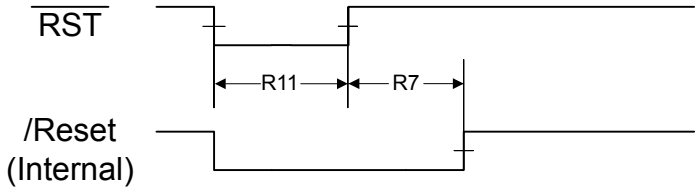

Figure 19-6. Power-On Reset Timing

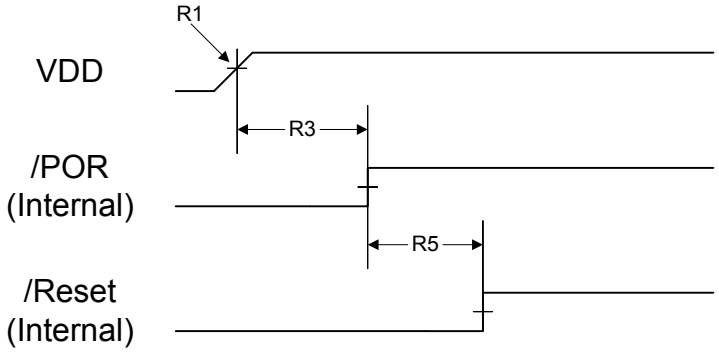

Figure 19-7. Brown-Out Reset Timing

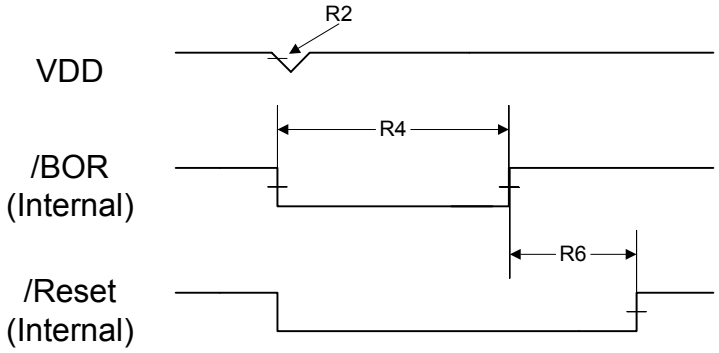

Figure 19-8. Software Reset Timing

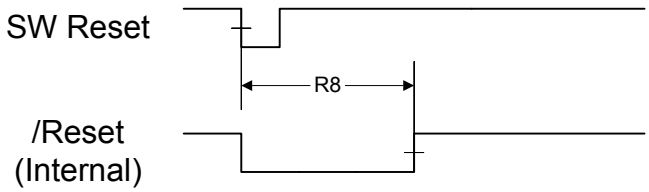

Figure 19-9. Watchdog Reset Timing

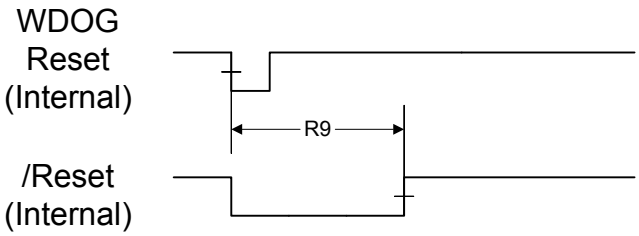

19.2.5 Sleep Modes

Table 19-14. Sleep Modes AC Characteristics[a]

Parameter No	Parameter	Parameter Name	Min	Nom	Max	Unit
D1	t_{WAKE_S}	Time to wake from interrupt in sleep or deep-sleep mode, not using the PLL	-	-	7	system clocks
D2	$t_{WAKE_PLL_S}$	Time to wake from interrupt in sleep or deep-sleep mode when using the PLL	-	-	T_{READY}	ms

a. Values in this table assume the IOSC is the clock source during sleep or deep-sleep mode.

19.2.6 Hibernation Module

The Hibernation Module requires special system implementation considerations since it is intended to power-down all other sections of its host device. The system power-supply distribution and interfaces to the device must be driven to 0 V_{DC} or powered down with the same external voltage regulator controlled by $\overline{HIB}$.

The external voltage regulators controlled by $\overline{HIB}$ must have a settling time of 250 µs or less.

Table 19-15. Hibernation Module AC Characteristics

Parameter No	Parameter	Parameter Name	Min	Nom	Max	Unit
H1	t_{HIB_LOW}	Internal 32.768 KHz clock reference rising edge to /HIB asserted	-	200	-	µs
H2	t_{HIB_HIGH}	Internal 32.768 KHz clock reference rising edge to /HIB deasserted	-	30	-	µs
H3	t_{WAKE_ASSERT}	/WAKE assertion time	62	-	-	µs
H4	$t_{WAKETOHIB}$	/WAKE assert to /HIB desassert	62	-	124	µs
H5	t_{XOSC_SETTLE}	XOSC settling time[a]	20	-	-	ms
H6	$t_{HIB_REG_ACCESS}$	Access time to or from a non-volatile register in HIB module to complete	92	-	-	µs

Table 19-15. Hibernation Module AC Characteristics *(continued)*

Parameter No	Parameter	Parameter Name	Min	Nom	Max	Unit
H7	$t_{HIB_TO_VDD}$	$\overline{HIB}$ deassert to VDD and VDD25 at minimum operational level	-	-	250	µs

a. This parameter is highly sensitive to PCB layout and trace lengths, which may make this parameter time longer. Care must be taken in PCB design to minimize trace lengths and RLC (resistance, inductance, capacitance).

Figure 19-10. Hibernation Module Timing

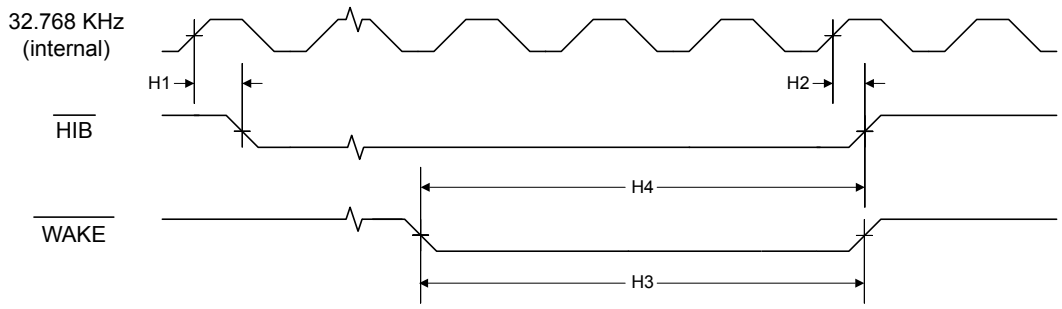

19.2.7 General-Purpose I/O (GPIO)

Note: All GPIOs are 5 V-tolerant.

Table 19-16. GPIO Characteristics

Parameter	Parameter Name	Condition	Min	Nom	Max	Unit
t_{GPIOR}	GPIO Rise Time (from 20% to 80% of V_{DD})	2-mA drive	-	17	26	ns
		4-mA drive		9	13	ns
		8-mA drive		6	9	ns
		8-mA drive with slew rate control		10	12	ns
t_{GPIOF}	GPIO Fall Time (from 80% to 20% of V_{DD})	2-mA drive	-	17	25	ns
		4-mA drive		8	12	ns
		8-mA drive		6	10	ns
		8-mA drive with slew rate control		11	13	ns

19.2.8 Synchronous Serial Interface (SSI)

Table 19-17. SSI Characteristics

Parameter No.	Parameter	Parameter Name	Min	Nom	Max	Unit
S1	t_{clk_per}	SSIClk cycle time	2	-	65024	system clocks
S2	t_{clk_high}	SSIClk high time	-	0.5	-	t clk_per
S3	t_{clk_low}	SSIClk low time	-	0.5	-	t clk_per
S4	t_{clkrf}	SSIClk rise/fall time[a]	-	6	10	ns
S5	t_{DMd}	Data from master valid delay time	0	-	1	system clocks
S6	t_{DMs}	Data from master setup time	1	-	-	system clocks
S7	t_{DMh}	Data from master hold time	2	-	-	system clocks
S8	t_{DSs}	Data from slave setup time	1	-	-	system clocks

Table 19-17. SSI Characteristics *(continued)*

Parameter No.	Parameter	Parameter Name	Min	Nom	Max	Unit
S9	t_{DSh}	Data from slave hold time	2	-	-	system clocks

a. Note that the delays shown are using 8-mA drive strength.

Figure 19-11. SSI Timing for TI Frame Format (FRF=01), Single Transfer Timing Measurement

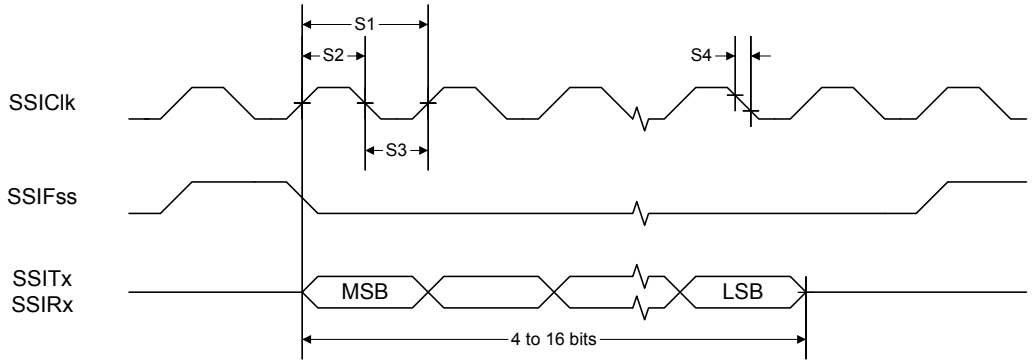

Figure 19-12. SSI Timing for MICROWIRE Frame Format (FRF=10), Single Transfer

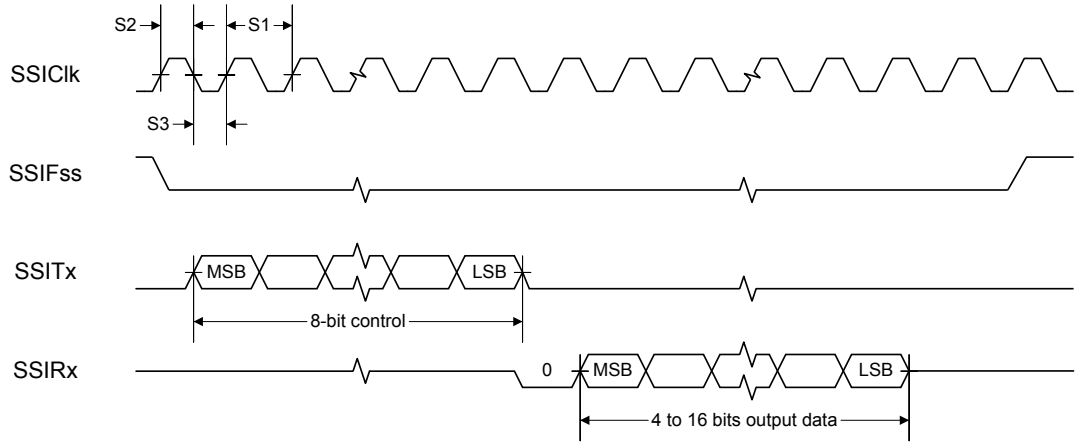

Figure 19-13. SSI Timing for SPI Frame Format (FRF=00), with SPH=1

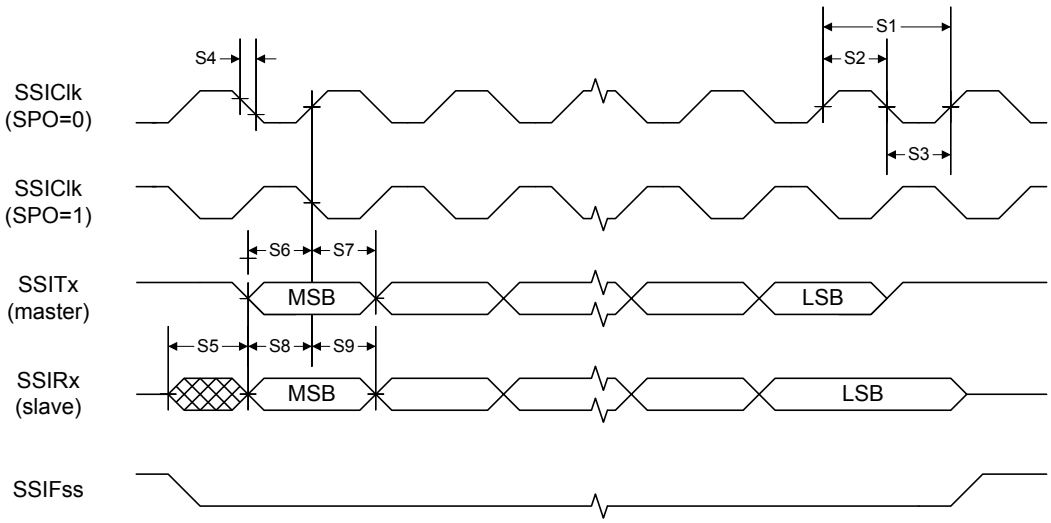

19.2.9 Inter-Integrated Circuit (I^2C) Interface

Table 19-18. I^2C Characteristics

Parameter No.	Parameter	Parameter Name	Min	Nom	Max	Unit
I1[a]	t_{SCH}	Start condition hold time	36	-	-	system clocks
I2[a]	t_{LP}	Clock Low period	36	-	-	system clocks
I3[b]	t_{SRT}	I2CSCL/I2CSDA rise time (V_{IL} =0.5 V to V_{IH} =2.4 V)	-	-	(see note b)	ns
I4[a]	t_{DH}	Data hold time	2	-	-	system clocks
I5[c]	t_{SFT}	I2CSCL/I2CSDA fall time (V_{IH} =2.4 V to V_{IL} =0.5 V)	-	9	10	ns
I6[a]	t_{HT}	Clock High time	24	-	-	system clocks
I7[a]	t_{DS}	Data setup time	18	-	-	system clocks
I8[a]	t_{SCSR}	Start condition setup time (for repeated start condition only)	36	-	-	system clocks
I9[a]	t_{SCS}	Stop condition setup time	24	-	-	system clocks

a. Values depend on the value programmed into the TPR bit in the **I^2C Master Timer Period (I2CMTPR)** register; a TPR programmed for the maximum I2CSCL frequency (TPR=0x2) results in a minimum output timing as shown in the table above. The I^2C interface is designed to scale the actual data transition time to move it to the middle of the I2CSCL Low period. The actual position is affected by the value programmed into the TPR; however, the numbers given in the above values are minimum values.

b. Because I2CSCL and I2CSDA are open-drain-type outputs, which the controller can only actively drive Low, the time I2CSCL or I2CSDA takes to reach a high level depends on external signal capacitance and pull-up resistor values.

c. Specified at a nominal 50 pF load.

Figure 19-14. I²C Timing

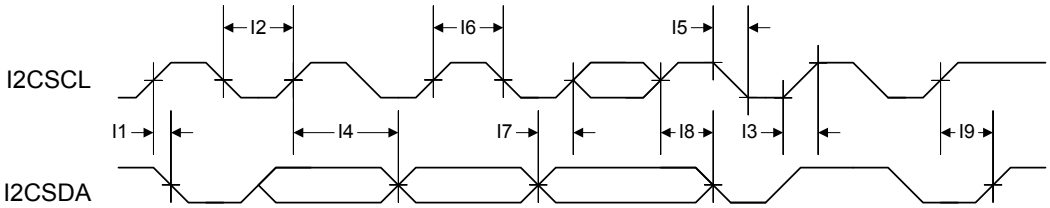

19.2.10 Analog Comparator

Table 19-19. Analog Comparator Characteristics

Parameter	Parameter Name	Min	Nom	Max	Unit
V_{OS}	Input offset voltage	-	±10	±25	mV
V_{CM}	Input common mode voltage range	0	-	V_{DD}-1.5	V
C_{MRR}	Common mode rejection ratio	50	-	-	dB
T_{RT}	Response time	-	-	1	µs
T_{MC}	Comparator mode change to Output Valid	-	-	10	µs

Table 19-20. Analog Comparator Voltage Reference Characteristics

Parameter	Parameter Name	Min	Nom	Max	Unit
R_{HR}	Resolution high range	-	V_{DD}/31	-	LSB
R_{LR}	Resolution low range	-	V_{DD}/23	-	LSB
A_{HR}	Absolute accuracy high range	-	-	±1/2	LSB
A_{LR}	Absolute accuracy low range	-	-	±1/4	LSB

A Serial Flash Loader

A.1 Serial Flash Loader

The Stellaris® serial flash loader is a preprogrammed flash-resident utility used to download code to the flash memory of a device without the use of a debug interface. The serial flash loader uses a simple packet interface to provide synchronous communication with the device. The flash loader runs off the crystal and does not enable the PLL, so its speed is determined by the crystal used. The two serial interfaces that can be used are the UART0 and SSI0 interfaces. For simplicity, both the data format and communication protocol are identical for both serial interfaces.

A.2 Interfaces

Once communication with the flash loader is established via one of the serial interfaces, that interface is used until the flash loader is reset or new code takes over. For example, once you start communicating using the SSI port, communications with the flash loader via the UART are disabled until the device is reset.

A.2.1 UART

The Universal Asynchronous Receivers/Transmitters (UART) communication uses a fixed serial format of 8 bits of data, no parity, and 1 stop bit. The baud rate used for communication is automatically detected by the flash loader and can be any valid baud rate supported by the host and the device. The auto detection sequence requires that the baud rate should be no more than 1/32 the crystal frequency of the board that is running the serial flash loader. This is actually the same as the hardware limitation for the maximum baud rate for any UART on a Stellaris device which is calculated as follows:

```
Max Baud Rate = System Clock Frequency / 16
```

In order to determine the baud rate, the serial flash loader needs to determine the relationship between its own crystal frequency and the baud rate. This is enough information for the flash loader to configure its UART to the same baud rate as the host. This automatic baud-rate detection allows the host to use any valid baud rate that it wants to communicate with the device.

The method used to perform this automatic synchronization relies on the host sending the flash loader two bytes that are both 0x55. This generates a series of pulses to the flash loader that it can use to calculate the ratios needed to program the UART to match the host's baud rate. After the host sends the pattern, it attempts to read back one byte of data from the UART. The flash loader returns the value of 0xCC to indicate successful detection of the baud rate. If this byte is not received after at least twice the time required to transfer the two bytes, the host can resend another pattern of 0x55, 0x55, and wait for the 0xCC byte again until the flash loader acknowledges that it has received a synchronization pattern correctly. For example, the time to wait for data back from the flash loader should be calculated as at least 2*(20(bits/sync)/baud rate (bits/sec)). For a baud rate of 115200, this time is 2*(20/115200) or 0.35 ms.

A.2.2 SSI

The Synchronous Serial Interface (SSI) port also uses a fixed serial format for communications, with the framing defined as Motorola format with SPH set to 1 and SPO set to 1. See "Frame Formats" on page 433 in the SSI chapter for more information on formats for this transfer protocol. Like the UART, this interface has hardware requirements that limit the maximum speed that the SSI clock can run. This allows the SSI clock to be at most 1/12 the crystal frequency of the board running

the flash loader. Since the host device is the master, the SSI on the flash loader device does not need to determine the clock as it is provided directly by the host.

A.3 Packet Handling

All communications, with the exception of the UART auto-baud, are done via defined packets that are acknowledged (ACK) or not acknowledged (NAK) by the devices. The packets use the same format for receiving and sending packets, including the method used to acknowledge successful or unsuccessful reception of a packet.

A.3.1 Packet Format

All packets sent and received from the device use the following byte-packed format.

```
struct
{
 unsigned char ucSize;
 unsigned char ucCheckSum;
 unsigned char Data[];
};
```

ucSize	The first byte received holds the total size of the transfer including the size and checksum bytes.
ucChecksum	This holds a simple checksum of the bytes in the data buffer only. The algorithm is Data[0]+Data[1]+…+ Data[`ucSize`-3].
Data	This is the raw data intended for the device, which is formatted in some form of command interface. There should be `ucSize`–2 bytes of data provided in this buffer to or from the device.

A.3.2 Sending Packets

The actual bytes of the packet can be sent individually or all at once; the only limitation is that commands that cause flash memory access should limit the download sizes to prevent losing bytes during flash programming. This limitation is discussed further in the section that describes the serial flash loader command, COMMAND_SEND_DATA (see “COMMAND_SEND_DATA (0x24)” on page 610).

Once the packet has been formatted correctly by the host, it should be sent out over the UART or SSI interface. Then the host should poll the UART or SSI interface for the first non-zero data returned from the device. The first non-zero byte will either be an ACK (0xCC) or a NAK (0x33) byte from the device indicating the packet was received successfully (ACK) or unsuccessfully (NAK). This does not indicate that the actual contents of the command issued in the data portion of the packet were valid, just that the packet was received correctly.

A.3.3 Receiving Packets

The flash loader sends a packet of data in the same format that it receives a packet. The flash loader may transfer leading zero data before the first actual byte of data is sent out. The first non-zero byte is the size of the packet followed by a checksum byte, and finally followed by the data itself. There is no break in the data after the first non-zero byte is sent from the flash loader. Once the device communicating with the flash loader receives all the bytes, it must either ACK or NAK the packet to indicate that the transmission was successful. The appropriate response after sending a NAK to the flash loader is to resend the command that failed and request the data again. If needed, the host may send leading zeros before sending down the ACK/NAK signal to the flash loader, as the

flash loader only accepts the first non-zero data as a valid response. This zero padding is needed by the SSI interface in order to receive data to or from the flash loader.

A.4 Commands

The next section defines the list of commands that can be sent to the flash loader. The first byte of the data should always be one of the defined commands, followed by data or parameters as determined by the command that is sent.

A.4.1 COMMAND_PING (0X20)

This command simply accepts the command and sets the global status to success. The format of the packet is as follows:

```
Byte[0] = 0x03;
Byte[1] = checksum(Byte[2]);
Byte[2] = COMMAND_PING;
```

The ping command has 3 bytes and the value for `COMMAND_PING` is 0x20 and the checksum of one byte is that same byte, making Byte[1] also 0x20. Since the ping command has no real return status, the receipt of an ACK can be interpreted as a successful ping to the flash loader.

A.4.2 COMMAND_GET_STATUS (0x23)

This command returns the status of the last command that was issued. Typically, this command should be sent after every command to ensure that the previous command was successful or to properly respond to a failure. The command requires one byte in the data of the packet and should be followed by reading a packet with one byte of data that contains a status code. The last step is to ACK or NAK the received data so the flash loader knows that the data has been read.

```
Byte[0] = 0x03
Byte[1] = checksum(Byte[2])
Byte[2] = COMMAND_GET_STATUS
```

A.4.3 COMMAND_DOWNLOAD (0x21)

This command is sent to the flash loader to indicate where to store data and how many bytes will be sent by the `COMMAND_SEND_DATA` commands that follow. The command consists of two 32-bit values that are both transferred MSB first. The first 32-bit value is the address to start programming data into, while the second is the 32-bit size of the data that will be sent. This command also triggers an erase of the full area to be programmed so this command takes longer than other commands. This results in a longer time to receive the ACK/NAK back from the board. This command should be followed by a `COMMAND_GET_STATUS` to ensure that the Program Address and Program size are valid for the device running the flash loader.

The format of the packet to send this command is a follows:

```
Byte[0] = 11
Byte[1] = checksum(Bytes[2:10])
Byte[2] = COMMAND_DOWNLOAD
Byte[3] = Program Address [31:24]
Byte[4] = Program Address [23:16]
Byte[5] = Program Address [15:8]
Byte[6] = Program Address [7:0]
Byte[7] = Program Size [31:24]
```

```
Byte[8] = Program Size [23:16]
Byte[9] = Program Size [15:8]
Byte[10] = Program Size [7:0]
```

A.4.4 COMMAND_SEND_DATA (0x24)

This command should only follow a COMMAND_DOWNLOAD command or another COMMAND_SEND_DATA command if more data is needed. Consecutive send data commands automatically increment address and continue programming from the previous location. The caller should limit transfers of data to a maximum 8 bytes of packet data to allow the flash to program successfully and not overflow input buffers of the serial interfaces. The command terminates programming once the number of bytes indicated by the COMMAND_DOWNLOAD command has been received. Each time this function is called it should be followed by a COMMAND_GET_STATUS to ensure that the data was successfully programmed into the flash. If the flash loader sends a NAK to this command, the flash loader does not increment the current address to allow retransmission of the previous data.

```
Byte[0] = 11
Byte[1] = checksum(Bytes[2:10])
Byte[2] = COMMAND_SEND_DATA
Byte[3] = Data[0]
Byte[4] = Data[1]
Byte[5] = Data[2]
Byte[6] = Data[3]
Byte[7] = Data[4]
Byte[8] = Data[5]
Byte[9] = Data[6]
Byte[10] = Data[7]
```

A.4.5 COMMAND_RUN (0x22)

This command is used to tell the flash loader to execute from the address passed as the parameter in this command. This command consists of a single 32-bit value that is interpreted as the address to execute. The 32-bit value is transmitted MSB first and the flash loader responds with an ACK signal back to the host device before actually executing the code at the given address. This allows the host to know that the command was received successfully and the code is now running.

```
Byte[0] = 7
Byte[1] = checksum(Bytes[2:6])
Byte[2] = COMMAND_RUN
Byte[3] = Execute Address[31:24]
Byte[4] = Execute Address[23:16]
Byte[5] = Execute Address[15:8]
Byte[6] = Execute Address[7:0]
```

A.4.6 COMMAND_RESET (0x25)

This command is used to tell the flash loader device to reset. This is useful when downloading a new image that overwrote the flash loader and wants to start from a full reset. Unlike the COMMAND_RUN command, this allows the initial stack pointer to be read by the hardware and set up for the new code. It can also be used to reset the flash loader if a critical error occurs and the host device wants to restart communication with the flash loader.

```
Byte[0] = 3
Byte[1] = checksum(Byte[2])
Byte[2] = COMMAND_RESET
```

The flash loader responds with an ACK signal back to the host device before actually executing the software reset to the device running the flash loader. This allows the host to know that the command was received successfully and the part will be reset.

B Register Quick Reference

31	30	29	28	27	26	25	24	23	22	21	20	19	18	17	16
15	14	13	12	11	10	9	8	7	6	5	4	3	2	1	0
The Cortex-M3 Processor															
R0, type R/W, , reset - (see page 53)															
DATA															
DATA															
R1, type R/W, , reset - (see page 53)															
DATA															
DATA															
R2, type R/W, , reset - (see page 53)															
DATA															
DATA															
R3, type R/W, , reset - (see page 53)															
DATA															
DATA															
R4, type R/W, , reset - (see page 53)															
DATA															
DATA															
R5, type R/W, , reset - (see page 53)															
DATA															
DATA															
R6, type R/W, , reset - (see page 53)															
DATA															
DATA															
R7, type R/W, , reset - (see page 53)															
DATA															
DATA															
R8, type R/W, , reset - (see page 53)															
DATA															
DATA															
R9, type R/W, , reset - (see page 53)															
DATA															
DATA															
R10, type R/W, , reset - (see page 53)															
DATA															
DATA															
R11, type R/W, , reset - (see page 53)															
DATA															
DATA															
R12, type R/W, , reset - (see page 53)															
DATA															
DATA															
SP, type R/W, , reset - (see page 54)															
SP															
SP															
LR, type R/W, , reset 0xFFFF.FFFF (see page 55)															
LINK															
LINK															
PC, type R/W, , reset - (see page 56)															
PC															
PC															

31	30	29	28	27	26	25	24	23	22	21	20	19	18	17	16
15	14	13	12	11	10	9	8	7	6	5	4	3	2	1	0
PSR, type R/W, , reset 0x0100.0000 (see page 57)															
N	Z	C	V	Q	ICI / IT		THUMB								
ICI / IT										ISRNUM					
PRIMASK, type R/W, , reset 0x0000.0000 (see page 61)															
															PRIMASK
FAULTMASK, type R/W, , reset 0x0000.0000 (see page 62)															
															FAULTMASK
BASEPRI, type R/W, , reset 0x0000.0000 (see page 63)															
								BASEPRI							
CONTROL, type R/W, , reset 0x0000.0000 (see page 64)															
														ASP	TMPL
Cortex-M3 Peripherals **System Timer (SysTick) Registers** Base 0xE000.E000															
STCTRL, type R/W, offset 0x010, reset 0x0000.0000															
															COUNT
													CLK_SRC	INTEN	ENABLE
STRELOAD, type R/W, offset 0x014, reset 0x0000.0000															
								RELOAD							
RELOAD															
STCURRENT, type R/WC, offset 0x018, reset 0x0000.0000															
								CURRENT							
CURRENT															
Cortex-M3 Peripherals **Nested Vectored Interrupt Controller (NVIC) Registers** Base 0xE000.E000															
EN0, type R/W, offset 0x100, reset 0x0000.0000															
INT															
INT															
EN1, type R/W, offset 0x104, reset 0x0000.0000															
				INT											
DIS0, type R/W, offset 0x180, reset 0x0000.0000															
INT															
INT															
DIS1, type R/W, offset 0x184, reset 0x0000.0000															
				INT											
PEND0, type R/W, offset 0x200, reset 0x0000.0000															
INT															
INT															
PEND1, type R/W, offset 0x204, reset 0x0000.0000															
				INT											
UNPEND0, type R/W, offset 0x280, reset 0x0000.0000															
INT															
INT															

31	30	29	28	27	26	25	24	23	22	21	20	19	18	17	16
15	14	13	12	11	10	9	8	7	6	5	4	3	2	1	0
UNPEND1, type R/W, offset 0x284, reset 0x0000.0000															
				INT											
ACTIVE0, type RO, offset 0x300, reset 0x0000.0000															
INT															
INT															
ACTIVE1, type RO, offset 0x304, reset 0x0000.0000															
				INT											
PRI0, type R/W, offset 0x400, reset 0x0000.0000															
INTD								INTC							
INTB								INTA							
PRI1, type R/W, offset 0x404, reset 0x0000.0000															
INTD								INTC							
INTB								INTA							
PRI2, type R/W, offset 0x408, reset 0x0000.0000															
INTD								INTC							
INTB								INTA							
PRI3, type R/W, offset 0x40C, reset 0x0000.0000															
INTD								INTC							
INTB								INTA							
PRI4, type R/W, offset 0x410, reset 0x0000.0000															
INTD								INTC							
INTB								INTA							
PRI5, type R/W, offset 0x414, reset 0x0000.0000															
INTD								INTC							
INTB								INTA							
PRI6, type R/W, offset 0x418, reset 0x0000.0000															
INTD								INTC							
INTB								INTA							
PRI7, type R/W, offset 0x41C, reset 0x0000.0000															
INTD								INTC							
INTB								INTA							
PRI8, type R/W, offset 0x420, reset 0x0000.0000															
INTD								INTC							
INTB								INTA							
PRI9, type R/W, offset 0x424, reset 0x0000.0000															
INTD								INTC							
INTB								INTA							
PRI10, type R/W, offset 0x428, reset 0x0000.0000															
INTD								INTC							
INTB								INTA							
SWTRIG, type WO, offset 0xF00, reset 0x0000.0000															
										INTID					
Cortex-M3 Peripherals **System Control Block (SCB) Registers** Base 0xE000.E000															
CPUID, type RO, offset 0xD00, reset 0x411F.C231															
IMP								VAR				CON			
PARTNO												REV			

31	30	29	28	27	26	25	24	23	22	21	20	19	18	17	16
15	14	13	12	11	10	9	8	7	6	5	4	3	2	1	0
INTCTRL, type R/W, offset 0xD04, reset 0x0000.0000															
NMISET			PENDSV	UNPENDSV	PENDSTSET	PENDSTCLR		ISRPRE	ISRPEND					VECPEND	
VECPEND				RETBASE						VECACT					
VTABLE, type R/W, offset 0xD08, reset 0x0000.0000															
		BASE	OFFSET												
OFFSET															
APINT, type R/W, offset 0xD0C, reset 0xFA05.0000															
VECTKEY															
ENDIANESS					PRIGROUP								SYSRESREQ	VECTCLRACT	VECTRESET
SYSCTRL, type R/W, offset 0xD10, reset 0x0000.0000															
											SEVONPEND		SLEEPDEEP	SLEEPEXIT	
CFGCTRL, type R/W, offset 0xD14, reset 0x0000.0000															
						STKALIGN	BFHFNMIGN				DIV0	UNALIGNED		MAINPEND	BASETHR
SYSPRI1, type R/W, offset 0xD18, reset 0x0000.0000															
								USAGE							
BUS								MEM							
SYSPRI2, type R/W, offset 0xD1C, reset 0x0000.0000															
SVC															
SYSPRI3, type R/W, offset 0xD20, reset 0x0000.0000															
TICK								PENDSV							
								DEBUG							
SYSHNDCTRL, type R/W, offset 0xD24, reset 0x0000.0000															
													USAGE	BUS	MEM
SVC	BUSP	MEMP	USAGEP	TICK	PNDSV		MON	SVCA				USGA		BUSA	MEMA
FAULTSTAT, type R/W1C, offset 0xD28, reset 0x0000.0000															
						DIV0	UNALIGN					NOCP	INVPC	INVSTAT	UNDEF
BFARV			BSTKE	BUSTKE	IMPRE	PRECISE	IBUS	MMARV			MSTKE	MUSTKE		DERR	IERR
HFAULTSTAT, type R/W1C, offset 0xD2C, reset 0x0000.0000															
DBG	FORCED														
														VECT	
MMADDR, type R/W, offset 0xD34, reset -															
ADDR															
ADDR															
FAULTADDR, type R/W, offset 0xD38, reset -															
ADDR															
ADDR															
Cortex-M3 Peripherals **Memory Protection Unit (MPU) Registers** Base 0xE000.E000															
MPUTYPE, type RO, offset 0xD90, reset 0x0000.0800															
								IREGION							
DREGION															SEPARATE
MPUCTRL, type R/W, offset 0xD94, reset 0x0000.0000															
													PRIVDEFEN	HFNMIENA	ENABLE
MPUNUMBER, type R/W, offset 0xD98, reset 0x0000.0000															
													NUMBER		

31	30	29	28	27	26	25	24	23	22	21	20	19	18	17	16
15	14	13	12	11	10	9	8	7	6	5	4	3	2	1	0
MPUBASE, type R/W, offset 0xD9C, reset 0x0000.0000															
ADDR															
ADDR											VALID		REGION		
MPUBASE1, type R/W, offset 0xDA4, reset 0x0000.0000															
ADDR															
ADDR											VALID		REGION		
MPUBASE2, type R/W, offset 0xDAC, reset 0x0000.0000															
ADDR															
ADDR											VALID		REGION		
MPUBASE3, type R/W, offset 0xDB4, reset 0x0000.0000															
ADDR															
ADDR											VALID		REGION		
MPUATTR, type R/W, offset 0xDA0, reset 0x0000.0000															
			XN		AP					TEX			S	C	B
SRD										SIZE					ENABLE
MPUATTR1, type R/W, offset 0xDA8, reset 0x0000.0000															
			XN		AP					TEX			S	C	B
SRD										SIZE					ENABLE
MPUATTR2, type R/W, offset 0xDB0, reset 0x0000.0000															
			XN		AP					TEX			S	C	B
SRD										SIZE					ENABLE
MPUATTR3, type R/W, offset 0xDB8, reset 0x0000.0000															
			XN		AP					TEX			S	C	B
SRD										SIZE					ENABLE
System Control Base 0x400F.E000															
DID0, type RO, offset 0x000, reset - (see page 180)															
	VER							CLASS							
MAJOR								MINOR							
PBORCTL, type R/W, offset 0x030, reset 0x0000.7FFD (see page 182)															
														BORIOR	
LDOPCTL, type R/W, offset 0x034, reset 0x0000.0000 (see page 183)															
										VADJ					
RIS, type RO, offset 0x050, reset 0x0000.0000 (see page 184)															
									PLLLRIS					BORRIS	
IMC, type R/W, offset 0x054, reset 0x0000.0000 (see page 185)															
									PLLLIM					BORIM	
MISC, type R/W1C, offset 0x058, reset 0x0000.0000 (see page 186)															
									PLLLMIS					BORMIS	
RESC, type R/W, offset 0x05C, reset - (see page 187)															
											SW	WDT	BOR	POR	EXT
RCC, type R/W, offset 0x060, reset 0x0780.3AD1 (see page 188)															
				ACG		SYSDIV			USESYSDIV						
		PWRDN		BYPASS		XTAL				OSCSRC				IOSCDIS	MOSCDIS
PLLCFG, type RO, offset 0x064, reset - (see page 191)															
		F									R				

31	30	29	28	27	26	25	24	23	22	21	20	19	18	17	16
15	14	13	12	11	10	9	8	7	6	5	4	3	2	1	0
RCC2, type R/W, offset 0x070, reset 0x0780.2810 (see page 192)															
USERCC2			SYSDIV2												
		PWRDN2		BYPASS2					OSCSRC2						
DSLPCLKCFG, type R/W, offset 0x144, reset 0x0780.0000 (see page 194)															
			DSDIVORIDE												
									DSOSCSRC						
DID1, type RO, offset 0x004, reset - (see page 195)															
VER				FAM				PARTNO							
PINCOUNT								TEMP			PKG		ROHS	QUAL	
DC0, type RO, offset 0x008, reset 0x00FF.007F (see page 197)															
SRAMSZ															
FLASHSZ															
DC1, type RO, offset 0x010, reset 0x0100.30DF (see page 198)															
							CAN0								
MINSYSDIV								MPU	HIB		PLL	WDT	SWO	SWD	JTAG
DC2, type RO, offset 0x014, reset 0x030F.5037 (see page 200)															
						COMP1	COMP0					TIMER3	TIMER2	TIMER1	TIMER0
	I2C1		I2C0							SSI1	SSI0		UART2	UART1	UART0
DC3, type RO, offset 0x018, reset 0xBF00.0FC0 (see page 202)															
32KHZ		CCP5	CCP4	CCP3	CCP2	CCP1	CCP0								
				C1O	C1PLUS	C1MINUS	C0O	C0PLUS	C0MINUS						
DC4, type RO, offset 0x01C, reset 0x0000.C0FF (see page 204)															
CCP7	CCP6							GPIOH	GPIOG	GPIOF	GPIOE	GPIOD	GPIOC	GPIOB	GPIOA
RCGC0, type R/W, offset 0x100, reset 0x00000040 (see page 206)															
							CAN0								
									HIB			WDT			
SCGC0, type R/W, offset 0x110, reset 0x00000040 (see page 208)															
							CAN0								
									HIB			WDT			
DCGC0, type R/W, offset 0x120, reset 0x00000040 (see page 210)															
							CAN0								
									HIB			WDT			
RCGC1, type R/W, offset 0x104, reset 0x00000000 (see page 212)															
						COMP1	COMP0					TIMER3	TIMER2	TIMER1	TIMER0
	I2C1		I2C0							SSI1	SSI0		UART2	UART1	UART0
SCGC1, type R/W, offset 0x114, reset 0x00000000 (see page 215)															
						COMP1	COMP0					TIMER3	TIMER2	TIMER1	TIMER0
	I2C1		I2C0							SSI1	SSI0		UART2	UART1	UART0
DCGC1, type R/W, offset 0x124, reset 0x00000000 (see page 218)															
						COMP1	COMP0					TIMER3	TIMER2	TIMER1	TIMER0
	I2C1		I2C0							SSI1	SSI0		UART2	UART1	UART0
RCGC2, type R/W, offset 0x108, reset 0x00000000 (see page 221)															
								GPIOH	GPIOG	GPIOF	GPIOE	GPIOD	GPIOC	GPIOB	GPIOA
SCGC2, type R/W, offset 0x118, reset 0x00000000 (see page 223)															
								GPIOH	GPIOG	GPIOF	GPIOE	GPIOD	GPIOC	GPIOB	GPIOA
DCGC2, type R/W, offset 0x128, reset 0x00000000 (see page 225)															
								GPIOH	GPIOG	GPIOF	GPIOE	GPIOD	GPIOC	GPIOB	GPIOA

31	30	29	28	27	26	25	24	23	22	21	20	19	18	17	16
15	14	13	12	11	10	9	8	7	6	5	4	3	2	1	0
SRCR0, type R/W, offset 0x040, reset 0x00000000 (see page 227)															
							CAN0								
									HIB			WDT			
SRCR1, type R/W, offset 0x044, reset 0x00000000 (see page 228)															
						COMP1	COMP0					TIMER3	TIMER2	TIMER1	TIMER0
	I2C1		I2C0							SSI1	SSI0		UART2	UART1	UART0
SRCR2, type R/W, offset 0x048, reset 0x00000000 (see page 230)															
								GPIOH	GPIOG	GPIOF	GPIOE	GPIOD	GPIOC	GPIOB	GPIOA
Hibernation Module Base 0x400F.C000															
HIBRTCC, type RO, offset 0x000, reset 0x0000.0000 (see page 240)															
RTCC															
RTCC															
HIBRTCM0, type R/W, offset 0x004, reset 0xFFFF.FFFF (see page 241)															
RTCM0															
RTCM0															
HIBRTCM1, type R/W, offset 0x008, reset 0xFFFF.FFFF (see page 242)															
RTCM1															
RTCM1															
HIBRTCLD, type R/W, offset 0x00C, reset 0xFFFF.FFFF (see page 243)															
RTCLD															
RTCLD															
HIBCTL, type R/W, offset 0x010, reset 0x8000.0000 (see page 244)															
								VABORT	CLK32EN	LOWBATEN	PINWEN	RTCWEN	CLKSEL	HIBREQ	RTCEN
HIBIM, type R/W, offset 0x014, reset 0x0000.0000 (see page 246)															
												EXTW	LOWBAT	RTCALT1	RTCALT0
HIBRIS, type RO, offset 0x018, reset 0x0000.0000 (see page 247)															
												EXTW	LOWBAT	RTCALT1	RTCALT0
HIBMIS, type RO, offset 0x01C, reset 0x0000.0000 (see page 248)															
												EXTW	LOWBAT	RTCALT1	RTCALT0
HIBIC, type R/W1C, offset 0x020, reset 0x0000.0000 (see page 249)															
												EXTW	LOWBAT	RTCALT1	RTCALT0
HIBRTCT, type R/W, offset 0x024, reset 0x0000.7FFF (see page 250)															
TRIM															
HIBDATA, type R/W, offset 0x030-0x12C, reset - (see page 251)															
RTD															
RTD															
Internal Memory **Flash Memory Control Registers (Flash Control Offset)** Base 0x400F.D000															
FMA, type R/W, offset 0x000, reset 0x0000.0000															
														OFFSET	
OFFSET															

31	30	29	28	27	26	25	24	23	22	21	20	19	18	17	16
15	14	13	12	11	10	9	8	7	6	5	4	3	2	1	0
FMD, type R/W, offset 0x004, reset 0x0000.0000															
DATA															
DATA															
FMC, type R/W, offset 0x008, reset 0x0000.0000															
WRKEY															
												COMT	MERASE	ERASE	WRITE
FCRIS, type RO, offset 0x00C, reset 0x0000.0000															
														PRIS	ARIS
FCIM, type R/W, offset 0x010, reset 0x0000.0000															
														PMASK	AMASK
FCMISC, type R/W1C, offset 0x014, reset 0x0000.0000															
														PMISC	AMISC
Internal Memory **Flash Memory Protection Registers (System Control Offset)** Base 0x400F.E000															
USECRL, type R/W, offset 0x140, reset 0x31															
								USEC							
FMPRE0, type R/W, offset 0x130 and 0x200, reset 0xFFFF.FFFF															
READ_ENABLE															
READ_ENABLE															
FMPPE0, type R/W, offset 0x134 and 0x400, reset 0xFFFF.FFFF															
PROG_ENABLE															
PROG_ENABLE															
USER_DBG, type R/W, offset 0x1D0, reset 0xFFFF.FFFE															
NW	DATA														
DATA														DBG1	DBG0
USER_REG0, type R/W, offset 0x1E0, reset 0xFFFF.FFFF															
NW	DATA														
DATA															
USER_REG1, type R/W, offset 0x1E4, reset 0xFFFF.FFFF															
NW	DATA														
DATA															
FMPRE1, type R/W, offset 0x204, reset 0xFFFF.FFFF															
READ_ENABLE															
READ_ENABLE															
FMPRE2, type R/W, offset 0x208, reset 0xFFFF.FFFF															
READ_ENABLE															
READ_ENABLE															
FMPRE3, type R/W, offset 0x20C, reset 0xFFFF.FFFF															
READ_ENABLE															
READ_ENABLE															
FMPPE1, type R/W, offset 0x404, reset 0xFFFF.FFFF															
PROG_ENABLE															
PROG_ENABLE															
FMPPE2, type R/W, offset 0x408, reset 0xFFFF.FFFF															
PROG_ENABLE															
PROG_ENABLE															

31	30	29	28	27	26	25	24	23	22	21	20	19	18	17	16
15	14	13	12	11	10	9	8	7	6	5	4	3	2	1	0
FMPPE3, type R/W, offset 0x40C, reset 0xFFFF.FFFF															
PROG_ENABLE															
PROG_ENABLE															
General-Purpose Input/Outputs (GPIOs) GPIO Port A base: 0x4000.4000 GPIO Port B base: 0x4000.5000 GPIO Port C base: 0x4000.6000 GPIO Port D base: 0x4000.7000 GPIO Port E base: 0x4002.4000 GPIO Port F base: 0x4002.5000 GPIO Port G base: 0x4002.6000 GPIO Port H base: 0x4002.7000															
GPIODATA, type R/W, offset 0x000, reset 0x0000.0000 (see page 292)															
								DATA							
GPIODIR, type R/W, offset 0x400, reset 0x0000.0000 (see page 293)															
								DIR							
GPIOIS, type R/W, offset 0x404, reset 0x0000.0000 (see page 294)															
								IS							
GPIOIBE, type R/W, offset 0x408, reset 0x0000.0000 (see page 295)															
								IBE							
GPIOIEV, type R/W, offset 0x40C, reset 0x0000.0000 (see page 296)															
								IEV							
GPIOIM, type R/W, offset 0x410, reset 0x0000.0000 (see page 297)															
								IME							
GPIORIS, type RO, offset 0x414, reset 0x0000.0000 (see page 298)															
								RIS							
GPIOMIS, type RO, offset 0x418, reset 0x0000.0000 (see page 299)															
								MIS							
GPIOICR, type W1C, offset 0x41C, reset 0x0000.0000 (see page 300)															
								IC							
GPIOAFSEL, type R/W, offset 0x420, reset - (see page 301)															
								AFSEL							
GPIODR2R, type R/W, offset 0x500, reset 0x0000.00FF (see page 303)															
								DRV2							
GPIODR4R, type R/W, offset 0x504, reset 0x0000.0000 (see page 304)															
								DRV4							
GPIODR8R, type R/W, offset 0x508, reset 0x0000.0000 (see page 305)															
								DRV8							
GPIOODR, type R/W, offset 0x50C, reset 0x0000.0000 (see page 306)															
								ODE							

31	30	29	28	27	26	25	24	23	22	21	20	19	18	17	16
15	14	13	12	11	10	9	8	7	6	5	4	3	2	1	0
GPIOPUR, type R/W, offset 0x510, reset - (see page 307)															
								PUE							
GPIOPDR, type R/W, offset 0x514, reset 0x0000.0000 (see page 308)															
								PDE							
GPIOSLR, type R/W, offset 0x518, reset 0x0000.0000 (see page 309)															
								SRL							
GPIODEN, type R/W, offset 0x51C, reset - (see page 310)															
								DEN							
GPIOLOCK, type R/W, offset 0x520, reset 0x0000.0001 (see page 311)															
LOCK															
LOCK															
GPIOCR, type -, offset 0x524, reset - (see page 312)															
								CR							
GPIOPeriphID4, type RO, offset 0xFD0, reset 0x0000.0000 (see page 314)															
								PID4							
GPIOPeriphID5, type RO, offset 0xFD4, reset 0x0000.0000 (see page 315)															
								PID5							
GPIOPeriphID6, type RO, offset 0xFD8, reset 0x0000.0000 (see page 316)															
								PID6							
GPIOPeriphID7, type RO, offset 0xFDC, reset 0x0000.0000 (see page 317)															
								PID7							
GPIOPeriphID0, type RO, offset 0xFE0, reset 0x0000.0061 (see page 318)															
								PID0							
GPIOPeriphID1, type RO, offset 0xFE4, reset 0x0000.0000 (see page 319)															
								PID1							
GPIOPeriphID2, type RO, offset 0xFE8, reset 0x0000.0018 (see page 320)															
								PID2							
GPIOPeriphID3, type RO, offset 0xFEC, reset 0x0000.0001 (see page 321)															
								PID3							
GPIOPCellID0, type RO, offset 0xFF0, reset 0x0000.000D (see page 322)															
								CID0							
GPIOPCellID1, type RO, offset 0xFF4, reset 0x0000.00F0 (see page 323)															
								CID1							
GPIOPCellID2, type RO, offset 0xFF8, reset 0x0000.0005 (see page 324)															
								CID2							

31	30	29	28	27	26	25	24	23	22	21	20	19	18	17	16
15	14	13	12	11	10	9	8	7	6	5	4	3	2	1	0
GPIOPCellID3, type RO, offset 0xFFC, reset 0x0000.00B1 (see page 325)															
								CID3							
General-Purpose Timers Timer0 base: 0x4003.0000 Timer1 base: 0x4003.1000 Timer2 base: 0x4003.2000 Timer3 base: 0x4003.3000															
GPTMCFG, type R/W, offset 0x000, reset 0x0000.0000 (see page 339)															
													GPTMCFG		
GPTMTAMR, type R/W, offset 0x004, reset 0x0000.0000 (see page 340)															
												TAAMS	TACMR	TAMR	
GPTMTBMR, type R/W, offset 0x008, reset 0x0000.0000 (see page 342)															
												TBAMS	TBCMR	TBMR	
GPTMCTL, type R/W, offset 0x00C, reset 0x0000.0000 (see page 344)															
	TBPWML			TBEVENT		TBSTALL	TBEN		TAPWML		RTCEN	TAEVENT		TASTALL	TAEN
GPTMIMR, type R/W, offset 0x018, reset 0x0000.0000 (see page 347)															
					CBEIM	CBMIM	TBTOIM					RTCIM	CAEIM	CAMIM	TATOIM
GPTMRIS, type RO, offset 0x01C, reset 0x0000.0000 (see page 349)															
					CBERIS	CBMRIS	TBTORIS					RTCRIS	CAERIS	CAMRIS	TATORIS
GPTMMIS, type RO, offset 0x020, reset 0x0000.0000 (see page 350)															
					CBEMIS	CBMMIS	TBTOMIS					RTCMIS	CAEMIS	CAMMIS	TATOMIS
GPTMICR, type W1C, offset 0x024, reset 0x0000.0000 (see page 351)															
					CBECINT	CBMCINT	TBTOCINT					RTCCINT	CAECINT	CAMCINT	TATOCINT
GPTMTAILR, type R/W, offset 0x028, reset 0xFFFF.FFFF (see page 353)															
TAILRH															
TAILRL															
GPTMTBILR, type R/W, offset 0x02C, reset 0x0000.FFFF (see page 354)															
TBILRL															
GPTMTAMATCHR, type R/W, offset 0x030, reset 0xFFFF.FFFF (see page 355)															
TAMRH															
TAMRL															
GPTMTBMATCHR, type R/W, offset 0x034, reset 0x0000.FFFF (see page 356)															
TBMRL															
GPTMTAPR, type R/W, offset 0x038, reset 0x0000.0000 (see page 357)															
								TAPSR							
GPTMTBPR, type R/W, offset 0x03C, reset 0x0000.0000 (see page 358)															
								TBPSR							
GPTMTAPMR, type R/W, offset 0x040, reset 0x0000.0000 (see page 359)															
								TAPSMR							

31	30	29	28	27	26	25	24	23	22	21	20	19	18	17	16
15	14	13	12	11	10	9	8	7	6	5	4	3	2	1	0
GPTMTBPMR, type R/W, offset 0x044, reset 0x0000.0000 (see page 360)															
								TBPSMR							
GPTMTAR, type RO, offset 0x048, reset 0xFFFF.FFFF (see page 361)															
TARH															
TARL															
GPTMTBR, type RO, offset 0x04C, reset 0x0000.FFFF (see page 362)															
TBRL															
Watchdog Timer Base 0x4000.0000															
WDTLOAD, type R/W, offset 0x000, reset 0xFFFF.FFFF (see page 367)															
WDTLoad															
WDTLoad															
WDTVALUE, type RO, offset 0x004, reset 0xFFFF.FFFF (see page 368)															
WDTValue															
WDTValue															
WDTCTL, type R/W, offset 0x008, reset 0x0000.0000 (see page 369)															
														RESEN	INTEN
WDTICR, type WO, offset 0x00C, reset - (see page 370)															
WDTIntClr															
WDTIntClr															
WDTRIS, type RO, offset 0x010, reset 0x0000.0000 (see page 371)															
															WDTRIS
WDTMIS, type RO, offset 0x014, reset 0x0000.0000 (see page 372)															
															WDTMIS
WDTTEST, type R/W, offset 0x418, reset 0x0000.0000 (see page 373)															
							STALL								
WDTLOCK, type R/W, offset 0xC00, reset 0x0000.0000 (see page 374)															
WDTLock															
WDTLock															
WDTPeriphID4, type RO, offset 0xFD0, reset 0x0000.0000 (see page 375)															
								PID4							
WDTPeriphID5, type RO, offset 0xFD4, reset 0x0000.0000 (see page 376)															
								PID5							
WDTPeriphID6, type RO, offset 0xFD8, reset 0x0000.0000 (see page 377)															
								PID6							
WDTPeriphID7, type RO, offset 0xFDC, reset 0x0000.0000 (see page 378)															
								PID7							
WDTPeriphID0, type RO, offset 0xFE0, reset 0x0000.0005 (see page 379)															
								PID0							
WDTPeriphID1, type RO, offset 0xFE4, reset 0x0000.0018 (see page 380)															
								PID1							

31	30	29	28	27	26	25	24	23	22	21	20	19	18	17	16
15	14	13	12	11	10	9	8	7	6	5	4	3	2	1	0
WDTPeriphID2, type RO, offset 0xFE8, reset 0x0000.0018 (see page 381)															
								PID2							
WDTPeriphID3, type RO, offset 0xFEC, reset 0x0000.0001 (see page 382)															
								PID3							
WDTPCellID0, type RO, offset 0xFF0, reset 0x0000.000D (see page 383)															
								CID0							
WDTPCellID1, type RO, offset 0xFF4, reset 0x0000.00F0 (see page 384)															
								CID1							
WDTPCellID2, type RO, offset 0xFF8, reset 0x0000.0005 (see page 385)															
								CID2							
WDTPCellID3, type RO, offset 0xFFC, reset 0x0000.00B1 (see page 386)															
								CID3							
Universal Asynchronous Receivers/Transmitters (UARTs) UART0 base: 0x4000.C000 UART1 base: 0x4000.D000 UART2 base: 0x4000.E000															
UARTDR, type R/W, offset 0x000, reset 0x0000.0000 (see page 397)															
				OE	BE	PE	FE	DATA							
UARTRSR/UARTECR, type RO, offset 0x004, reset 0x0000.0000 (Reads) (see page 399)															
												OE	BE	PE	FE
UARTRSR/UARTECR, type WO, offset 0x004, reset 0x0000.0000 (Writes) (see page 399)															
								DATA							
UARTFR, type RO, offset 0x018, reset 0x0000.0090 (see page 401)															
								TXFE	RXFF	TXFF	RXFE	BUSY			
UARTILPR, type R/W, offset 0x020, reset 0x0000.0000 (see page 403)															
								ILPDVSR							
UARTIBRD, type R/W, offset 0x024, reset 0x0000.0000 (see page 404)															
DIVINT															
UARTFBRD, type R/W, offset 0x028, reset 0x0000.0000 (see page 405)															
										DIVFRAC					
UARTLCRH, type R/W, offset 0x02C, reset 0x0000.0000 (see page 406)															
								SPS	WLEN		FEN	STP2	EPS	PEN	BRK
UARTCTL, type R/W, offset 0x030, reset 0x0000.0300 (see page 408)															
						RXE	TXE	LBE					SIRLP	SIREN	UARTEN
UARTIFLS, type R/W, offset 0x034, reset 0x0000.0012 (see page 410)															
										RXIFLSEL			TXIFLSEL		

31	30	29	28	27	26	25	24	23	22	21	20	19	18	17	16
15	14	13	12	11	10	9	8	7	6	5	4	3	2	1	0
UARTIM, type R/W, offset 0x038, reset 0x0000.0000 (see page 412)															
					OEIM	BEIM	PEIM	FEIM	RTIM	TXIM	RXIM				
UARTRIS, type RO, offset 0x03C, reset 0x0000.000F (see page 414)															
					OERIS	BERIS	PERIS	FERIS	RTRIS	TXRIS	RXRIS				
UARTMIS, type RO, offset 0x040, reset 0x0000.0000 (see page 415)															
					OEMIS	BEMIS	PEMIS	FEMIS	RTMIS	TXMIS	RXMIS				
UARTICR, type W1C, offset 0x044, reset 0x0000.0000 (see page 416)															
					OEIC	BEIC	PEIC	FEIC	RTIC	TXIC	RXIC				
UARTPeriphID4, type RO, offset 0xFD0, reset 0x0000.0000 (see page 418)															
								PID4							
UARTPeriphID5, type RO, offset 0xFD4, reset 0x0000.0000 (see page 419)															
								PID5							
UARTPeriphID6, type RO, offset 0xFD8, reset 0x0000.0000 (see page 420)															
								PID6							
UARTPeriphID7, type RO, offset 0xFDC, reset 0x0000.0000 (see page 421)															
								PID7							
UARTPeriphID0, type RO, offset 0xFE0, reset 0x0000.0011 (see page 422)															
								PID0							
UARTPeriphID1, type RO, offset 0xFE4, reset 0x0000.0000 (see page 423)															
								PID1							
UARTPeriphID2, type RO, offset 0xFE8, reset 0x0000.0018 (see page 424)															
								PID2							
UARTPeriphID3, type RO, offset 0xFEC, reset 0x0000.0001 (see page 425)															
								PID3							
UARTPCellID0, type RO, offset 0xFF0, reset 0x0000.000D (see page 426)															
								CID0							
UARTPCellID1, type RO, offset 0xFF4, reset 0x0000.00F0 (see page 427)															
								CID1							
UARTPCellID2, type RO, offset 0xFF8, reset 0x0000.0005 (see page 428)															
								CID2							
UARTPCellID3, type RO, offset 0xFFC, reset 0x0000.00B1 (see page 429)															
								CID3							

31	30	29	28	27	26	25	24	23	22	21	20	19	18	17	16
15	14	13	12	11	10	9	8	7	6	5	4	3	2	1	0
Synchronous Serial Interface (SSI) SSI0 base: 0x4000.8000 SSI1 base: 0x4000.9000															
SSICR0, type R/W, offset 0x000, reset 0x0000.0000 (see page 443)															
SCR								SPH	SPO	FRF		DSS			
SSICR1, type R/W, offset 0x004, reset 0x0000.0000 (see page 445)															
												SOD	MS	SSE	LBM
SSIDR, type R/W, offset 0x008, reset 0x0000.0000 (see page 447)															
DATA															
SSISR, type RO, offset 0x00C, reset 0x0000.0003 (see page 448)															
											BSY	RFF	RNE	TNF	TFE
SSICPSR, type R/W, offset 0x010, reset 0x0000.0000 (see page 450)															
								CPSDVSR							
SSIIM, type R/W, offset 0x014, reset 0x0000.0000 (see page 451)															
												TXIM	RXIM	RTIM	RORIM
SSIRIS, type RO, offset 0x018, reset 0x0000.0008 (see page 453)															
												TXRIS	RXRIS	RTRIS	RORRIS
SSIMIS, type RO, offset 0x01C, reset 0x0000.0000 (see page 454)															
												TXMIS	RXMIS	RTMIS	RORMIS
SSIICR, type W1C, offset 0x020, reset 0x0000.0000 (see page 455)															
														RTIC	RORIC
SSIPeriphID4, type RO, offset 0xFD0, reset 0x0000.0000 (see page 456)															
								PID4							
SSIPeriphID5, type RO, offset 0xFD4, reset 0x0000.0000 (see page 457)															
								PID5							
SSIPeriphID6, type RO, offset 0xFD8, reset 0x0000.0000 (see page 458)															
								PID6							
SSIPeriphID7, type RO, offset 0xFDC, reset 0x0000.0000 (see page 459)															
								PID7							
SSIPeriphID0, type RO, offset 0xFE0, reset 0x0000.0022 (see page 460)															
								PID0							
SSIPeriphID1, type RO, offset 0xFE4, reset 0x0000.0000 (see page 461)															
								PID1							
SSIPeriphID2, type RO, offset 0xFE8, reset 0x0000.0018 (see page 462)															
								PID2							

31	30	29	28	27	26	25	24	23	22	21	20	19	18	17	16
15	14	13	12	11	10	9	8	7	6	5	4	3	2	1	0
SSIPeriphID3, type RO, offset 0xFEC, reset 0x0000.0001 (see page 463)															
								PID3							
SSIPCellID0, type RO, offset 0xFF0, reset 0x0000.000D (see page 464)															
								CID0							
SSIPCellID1, type RO, offset 0xFF4, reset 0x0000.00F0 (see page 465)															
								CID1							
SSIPCellID2, type RO, offset 0xFF8, reset 0x0000.0005 (see page 466)															
								CID2							
SSIPCellID3, type RO, offset 0xFFC, reset 0x0000.00B1 (see page 467)															
								CID3							
Inter-Integrated Circuit (I²C) Interface **I²C Master** I2C 0 base: 0x4002.0000 I2C 1 base: 0x4002.1000															
I2CMSA, type R/W, offset 0x000, reset 0x0000.0000															
								SA							R/S
I2CMCS, type RO, offset 0x004, reset 0x0000.0000 (Reads)															
									BUSBSY	IDLE	ARBLST	DATACK	ADRACK	ERROR	BUSY
I2CMCS, type WO, offset 0x004, reset 0x0000.0000 (Writes)															
												ACK	STOP	START	RUN
I2CMDR, type R/W, offset 0x008, reset 0x0000.0000															
								DATA							
I2CMTPR, type R/W, offset 0x00C, reset 0x0000.0001															
									TPR						
I2CMIMR, type R/W, offset 0x010, reset 0x0000.0000															
															IM
I2CMRIS, type RO, offset 0x014, reset 0x0000.0000															
															RIS
I2CMMIS, type RO, offset 0x018, reset 0x0000.0000															
															MIS
I2CMICR, type WO, offset 0x01C, reset 0x0000.0000															
															IC
I2CMCR, type R/W, offset 0x020, reset 0x0000.0000															
										SFE	MFE				LPBK

31	30	29	28	27	26	25	24	23	22	21	20	19	18	17	16
15	14	13	12	11	10	9	8	7	6	5	4	3	2	1	0
Inter-Integrated Circuit (I^2C) Interface **I^2C Slave** I2C 0 base: 0x4002.0000 I2C 1 base: 0x4002.1000															
I2CSOAR, type R/W, offset 0x800, reset 0x0000.0000															
									OAR						
I2CSCSR, type RO, offset 0x804, reset 0x0000.0000 (Reads)															
													FBR	TREQ	RREQ
I2CSCSR, type WO, offset 0x804, reset 0x0000.0000 (Writes)															
															DA
I2CSDR, type R/W, offset 0x808, reset 0x0000.0000															
								DATA							
I2CSIMR, type R/W, offset 0x80C, reset 0x0000.0000															
															DATAIM
I2CSRIS, type RO, offset 0x810, reset 0x0000.0000															
															DATARIS
I2CSMIS, type RO, offset 0x814, reset 0x0000.0000															
															DATAMIS
I2CSICR, type WO, offset 0x818, reset 0x0000.0000															
															DATAIC
Controller Area Network (CAN) Module CAN0 base: 0x4004.0000															
CANCTL, type R/W, offset 0x000, reset 0x0000.0001 (see page 527)															
								TEST	CCE	DAR		EIE	SIE	IE	INIT
CANSTS, type R/W, offset 0x004, reset 0x0000.0000 (see page 529)															
								BOFF	EWARN	EPASS	RXOK	TXOK	LEC		
CANERR, type RO, offset 0x008, reset 0x0000.0000 (see page 531)															
RP	REC							TEC							
CANBIT, type R/W, offset 0x00C, reset 0x0000.2301 (see page 532)															
	TSEG2			TSEG1				SJW		BRP					
CANINT, type RO, offset 0x010, reset 0x0000.0000 (see page 533)															
INTID															
CANTST, type R/W, offset 0x014, reset 0x0000.0000 (see page 534)															
								RX	TX		LBACK	SILENT	BASIC		
CANBRPE, type R/W, offset 0x018, reset 0x0000.0000 (see page 536)															
												BRPE			

31	30	29	28	27	26	25	24	23	22	21	20	19	18	17	16
15	14	13	12	11	10	9	8	7	6	5	4	3	2	1	0
CANIF1CRQ, type R/W, offset 0x020, reset 0x0000.0001 (see page 537)															
BUSY										MNUM					
CANIF2CRQ, type R/W, offset 0x080, reset 0x0000.0001 (see page 537)															
BUSY										MNUM					
CANIF1CMSK, type R/W, offset 0x024, reset 0x0000.0000 (see page 538)															
								WRNRD	MASK	ARB	CONTROL	CLRINTPND	NEWDAT / TXRQST	DATAA	DATAB
CANIF2CMSK, type R/W, offset 0x084, reset 0x0000.0000 (see page 538)															
								WRNRD	MASK	ARB	CONTROL	CLRINTPND	NEWDAT / TXRQST	DATAA	DATAB
CANIF1MSK1, type R/W, offset 0x028, reset 0x0000.FFFF (see page 540)															
MSK															
CANIF2MSK1, type R/W, offset 0x088, reset 0x0000.FFFF (see page 540)															
MSK															
CANIF1MSK2, type R/W, offset 0x02C, reset 0x0000.FFFF (see page 541)															
MXTD	MDIR		MSK												
CANIF2MSK2, type R/W, offset 0x08C, reset 0x0000.FFFF (see page 541)															
MXTD	MDIR		MSK												
CANIF1ARB1, type R/W, offset 0x030, reset 0x0000.0000 (see page 542)															
ID															
CANIF2ARB1, type R/W, offset 0x090, reset 0x0000.0000 (see page 542)															
ID															
CANIF1ARB2, type R/W, offset 0x034, reset 0x0000.0000 (see page 543)															
MSGVAL	XTD	DIR	ID												
CANIF2ARB2, type R/W, offset 0x094, reset 0x0000.0000 (see page 543)															
MSGVAL	XTD	DIR	ID												
CANIF1MCTL, type R/W, offset 0x038, reset 0x0000.0000 (see page 545)															
NEWDAT	MSGLST	INTPND	UMASK	TXIE	RXIE	RMTEN	TXRQST	EOB				DLC			
CANIF2MCTL, type R/W, offset 0x098, reset 0x0000.0000 (see page 545)															
NEWDAT	MSGLST	INTPND	UMASK	TXIE	RXIE	RMTEN	TXRQST	EOB				DLC			
CANIF1DA1, type R/W, offset 0x03C, reset 0x0000.0000 (see page 547)															
DATA															
CANIF1DA2, type R/W, offset 0x040, reset 0x0000.0000 (see page 547)															
DATA															
CANIF1DB1, type R/W, offset 0x044, reset 0x0000.0000 (see page 547)															
DATA															

31	30	29	28	27	26	25	24	23	22	21	20	19	18	17	16
15	14	13	12	11	10	9	8	7	6	5	4	3	2	1	0
CANIF1DB2, type R/W, offset 0x048, reset 0x0000.0000 (see page 547)															
DATA															
CANIF2DA1, type R/W, offset 0x09C, reset 0x0000.0000 (see page 547)															
DATA															
CANIF2DA2, type R/W, offset 0x0A0, reset 0x0000.0000 (see page 547)															
DATA															
CANIF2DB1, type R/W, offset 0x0A4, reset 0x0000.0000 (see page 547)															
DATA															
CANIF2DB2, type R/W, offset 0x0A8, reset 0x0000.0000 (see page 547)															
DATA															
CANTXRQ1, type RO, offset 0x100, reset 0x0000.0000 (see page 548)															
TXRQST															
CANTXRQ2, type RO, offset 0x104, reset 0x0000.0000 (see page 548)															
TXRQST															
CANNWDA1, type RO, offset 0x120, reset 0x0000.0000 (see page 549)															
NEWDAT															
CANNWDA2, type RO, offset 0x124, reset 0x0000.0000 (see page 549)															
NEWDAT															
CANMSG1INT, type RO, offset 0x140, reset 0x0000.0000 (see page 550)															
INTPND															
CANMSG2INT, type RO, offset 0x144, reset 0x0000.0000 (see page 550)															
INTPND															
CANMSG1VAL, type RO, offset 0x160, reset 0x0000.0000 (see page 551)															
MSGVAL															
CANMSG2VAL, type RO, offset 0x164, reset 0x0000.0000 (see page 551)															
MSGVAL															
Analog Comparators Base 0x4003.C000															
ACMIS, type R/W1C, offset 0x000, reset 0x0000.0000 (see page 557)															
														IN1	IN0
ACRIS, type RO, offset 0x004, reset 0x0000.0000 (see page 558)															
														IN1	IN0
ACINTEN, type R/W, offset 0x008, reset 0x0000.0000 (see page 559)															
														IN1	IN0
ACREFCTL, type R/W, offset 0x010, reset 0x0000.0000 (see page 560)															
						EN	RNG					VREF			

31	30	29	28	27	26	25	24	23	22	21	20	19	18	17	16
15	14	13	12	11	10	9	8	7	6	5	4	3	2	1	0
ACSTAT0, type RO, offset 0x020, reset 0x0000.0000 (see page 561)															
														OVAL	
ACSTAT1, type RO, offset 0x040, reset 0x0000.0000 (see page 561)															
														OVAL	
ACCTL0, type R/W, offset 0x024, reset 0x0000.0000 (see page 562)															
					ASRCP						ISLVAL	ISEN		CINV	
ACCTL1, type R/W, offset 0x044, reset 0x0000.0000 (see page 562)															
					ASRCP						ISLVAL	ISEN		CINV	

C Ordering and Contact Information

C.1 Ordering Information

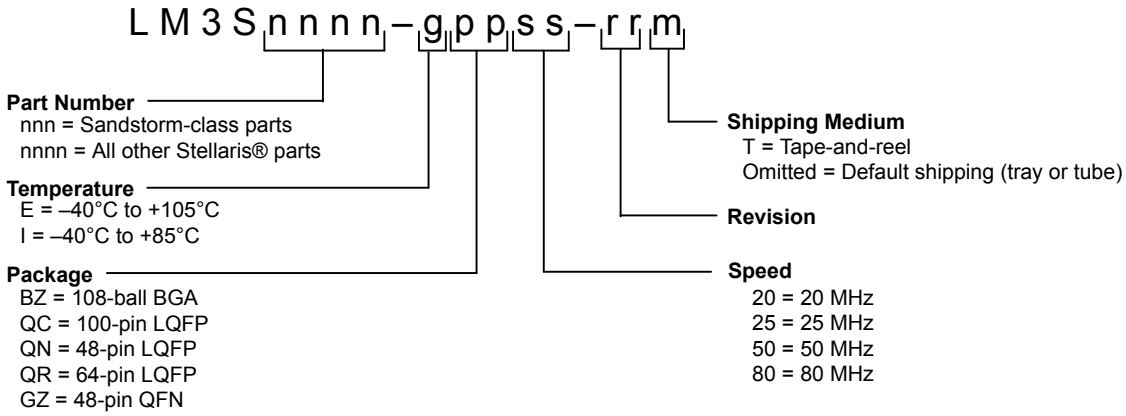

Table C-1. Part Ordering Information

Orderable Part Number	Description
LM3S2911-IBZ50-A2	Stellaris® LM3S2911 Microcontroller Industrial Temperature 108-ball BGA
LM3S2911-IBZ50-A2T	Stellaris LM3S2911 Microcontroller Industrial Temperature 108-ball BGA Tape-and-reel
LM3S2911-EQC50-A2	Stellaris LM3S2911 Microcontroller Extended Temperature 100-pin LQFP
LM3S2911-EQC50-A2T	Stellaris LM3S2911 Microcontroller Extended Temperature 100-pin LQFP Tape-and-reel
LM3S2911-IQC50-A2	Stellaris LM3S2911 Microcontroller Industrial Temperature 100-pin LQFP
LM3S2911-IQC50-A2T	Stellaris LM3S2911 Microcontroller Industrial Temperature 100-pin LQFP Tape-and-reel

C.2 Part Markings

The Stellaris microcontrollers are marked with an identifying number. This code contains the following information:

- The first line indicates the part number, for example, LM3S9B90.
- In the second line, the first eight characters indicate the temperature, package, speed, revision, and product status. For example in the figure below, IQC80C0X indicates an Industrial temperature (I), 100-pin LQFP package (QC), 80-MHz (80), revision C0 (C0) device. The letter immediately following the revision indicates product status. An X indicates experimental and requires a waiver; an S indicates the part is fully qualified and released to production.
- The remaining characters contain internal tracking numbers.

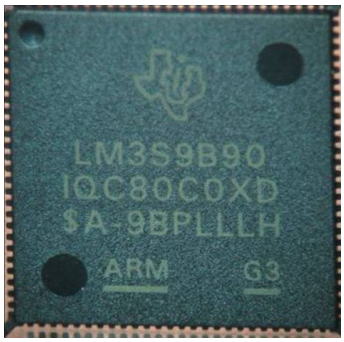

C.3 Kits

The Stellaris Family provides the hardware and software tools that engineers need to begin development quickly.

- Reference Design Kits accelerate product development by providing ready-to-run hardware and comprehensive documentation including hardware design files
- Evaluation Kits provide a low-cost and effective means of evaluating Stellaris microcontrollers before purchase
- Development Kits provide you with all the tools you need to develop and prototype embedded applications right out of the box

See the website at www.ti.com/stellaris for the latest tools available, or ask your distributor.

C.4 Support Information

For support on Stellaris products, contact the TI Worldwide Product Information Center nearest you: http://www-k.ext.ti.com/sc/technical-support/product-information-centers.htm.

D Package Information

D.1 100-Pin LQFP Package

D.1.1 Package Dimensions

Figure D-1. Stellaris LM3S2911 100-Pin LQFP Package Dimensions

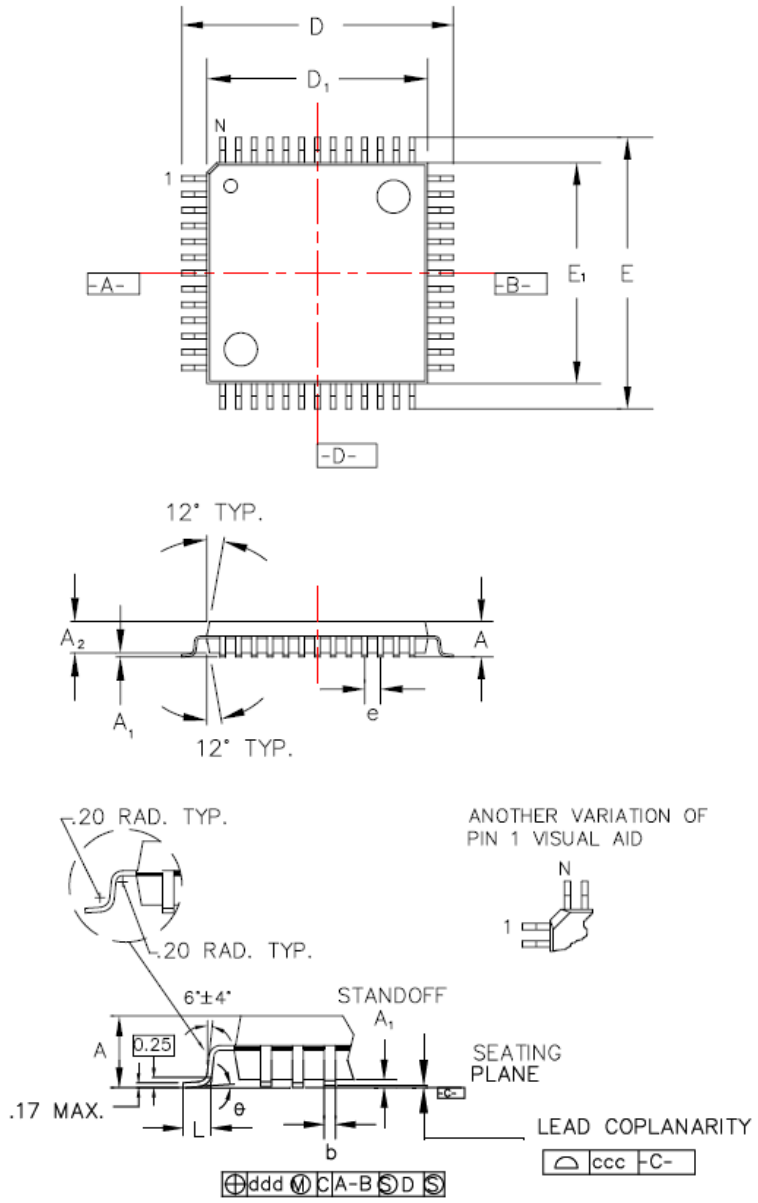

Note: The following notes apply to the package drawing.

1. All dimensions shown in mm.

2. Dimensions shown are nominal with tolerances indicated.
3. Foot length 'L' is measured at gage plane 0.25 mm above seating plane.

Body +2.00 mm Footprint, 1.4 mm package thickness		
Symbols	Leads	100L
A	Max.	1.60
A_1	-	0.05 Min./0.15 Max.
A_2	±0.05	1.40
D	±0.20	16.00
D_1	±0.05	14.00
E	±0.20	16.00
E_1	±0.05	14.00
L	+0.15/-0.10	0.60
e	Basic	0.50
b	+0.05	0.22
θ	-	0˚-7˚
ddd	Max.	0.08
ccc	Max.	0.08
JEDEC Reference Drawing		MS-026
Variation Designator		BED

D.1.2 Tray Dimensions

Figure D-2. 100-Pin LQFP Tray Dimensions

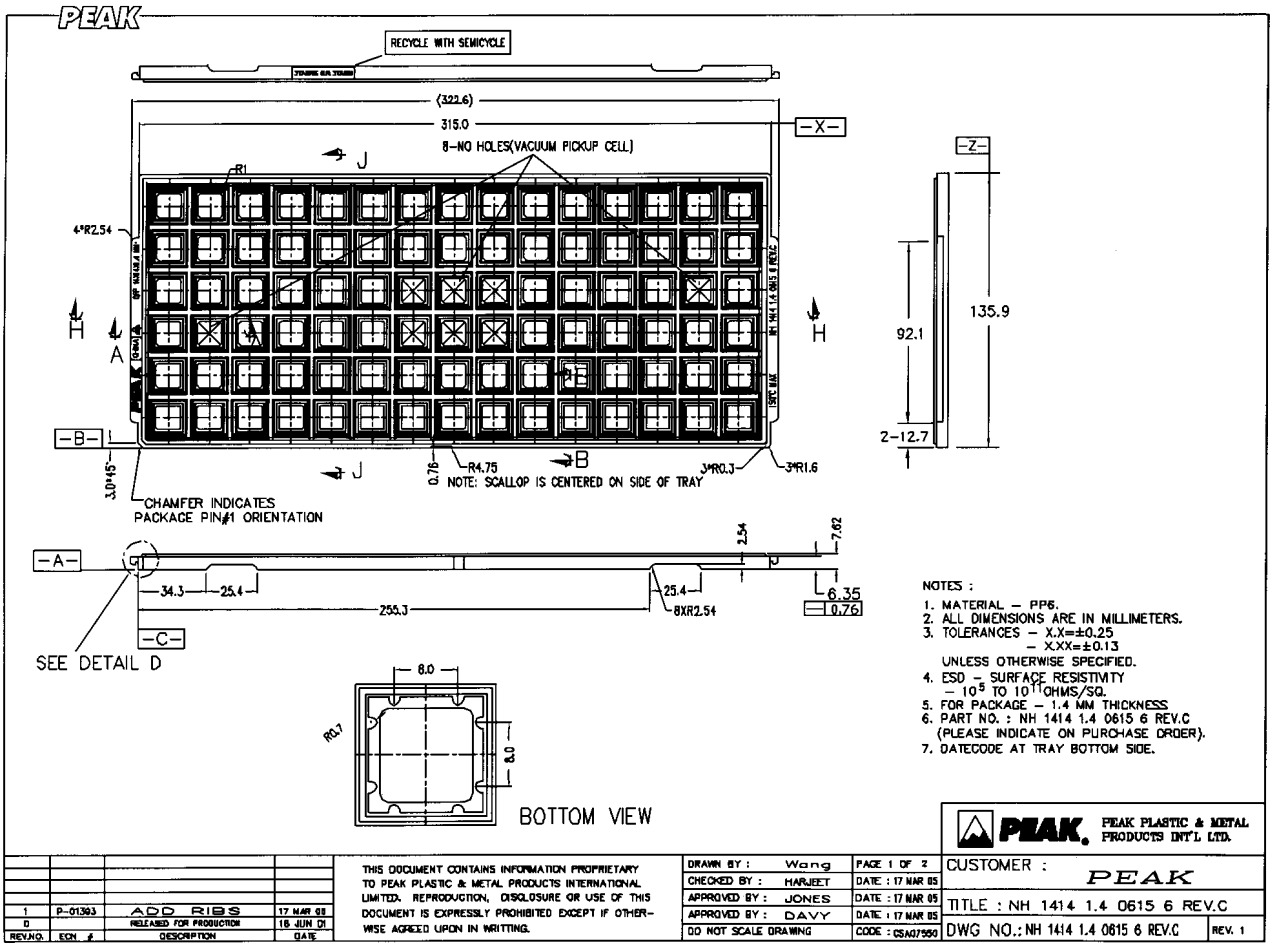

D.1.3 Tape and Reel Dimensions

Note: In the figure that follows, pin 1 is located in the top right corner of the device.

Figure D-3. 100-Pin LQFP Tape and Reel Dimensions

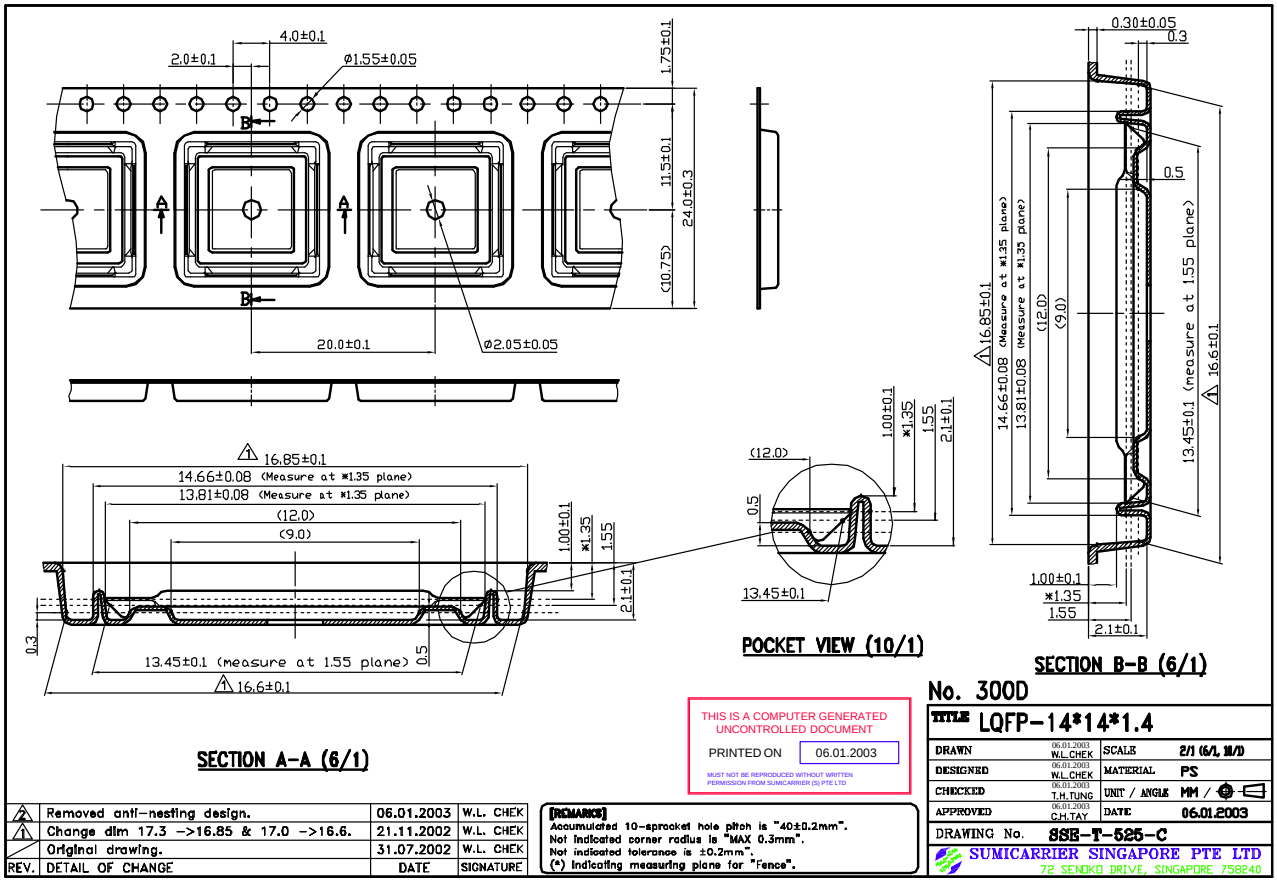

D.2 108-Ball BGA Package

D.2.1 Package Dimensions

Figure D-4. Stellaris LM3S2911 108-Ball BGA Package Dimensions

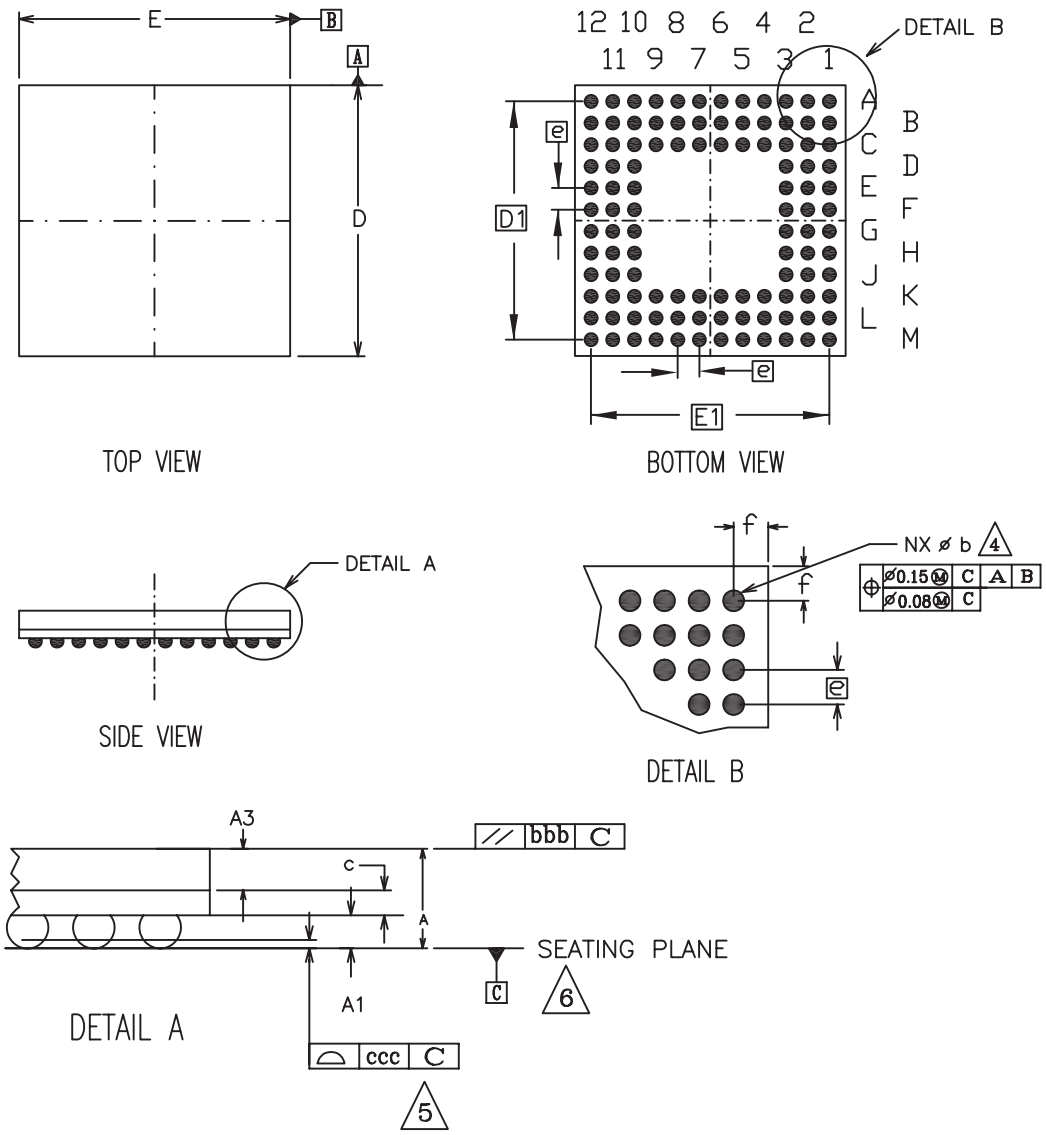

Note: The following notes apply to the package drawing.

1. ALL DIMENSIONS ARE IN MILLIMETERS.
2. 'e' REPRESENTS THE BASIC SOLDER BALL GRID PITCH.
3. 'M' REPRESENTS THE BASIC SOLDER BALL MATRIX SIZE. AND SYMBOL 'N' IS THE NUMBER OF BALLS AFTER DEPOPULATING.
4. 'b' IS MEASURABLE AT THE MAXIMUM SOLDER BALL DIAMETER AFTER REFLOW PARALLEL TO PRIMARY DAIUM C .
5. DIMENSION 'ccc' IS MEASURED PARALLEL TO PRIMARY DATUM C .
6. PRIMARY DATUM C AND SEATING PLANE ARE DEFINED BY THE SPHERICAL CROWNS OF THE SOLDER BALLS.
7. PACKAGE SURFACE SHALL BE MATTE FINISH CHARMILLES 24 TO 27.
8. SUBSTRATE MATERIAL BASE IS BT RESIN.
9. THE OVERALL PACKAGE THICKNESS "A" ALREADY CONSIDERS COLLAPSE BALLS
10. DIMENSIONING AND TOLERANCING PER ASME Y14.5M 1994.
11. EXCEPT DIMENSION b.

Symbols	MIN	NOM	MAX
A	1.22	1.36	1.50
A1	0.29	0.34	0.39
A3	0.65	0.70	0.75
c	0.28	0.32	0.36
D	9.85	10.00	10.15
D1	8.80 BSC		
E	9.85	10.00	10.15
E1	8.80 BSC		
b	0.43	0.48	0.53
bbb	.20		
ddd	.12		
e	0.80 BSC		
f	-	0.60	-
M	12		
n	108		
REF: JEDEC MO-219F			

D.2.2 Tray Dimensions

Figure D-5. 108-Ball BGA Tray Dimensions

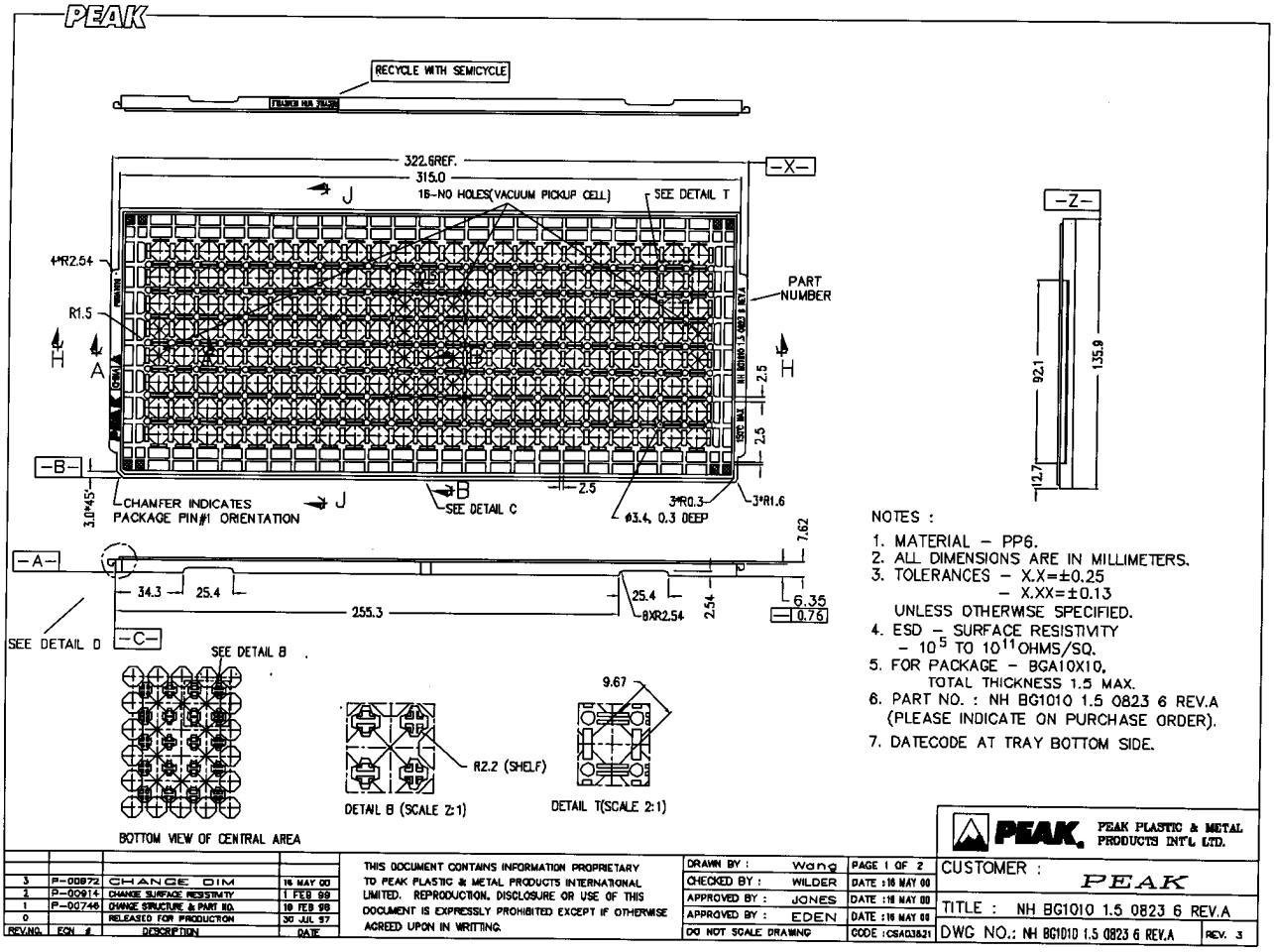

D.2.3 Tape and Reel Dimensions

Figure D-6. 108-Ball BGA Tape and Reel Dimensions

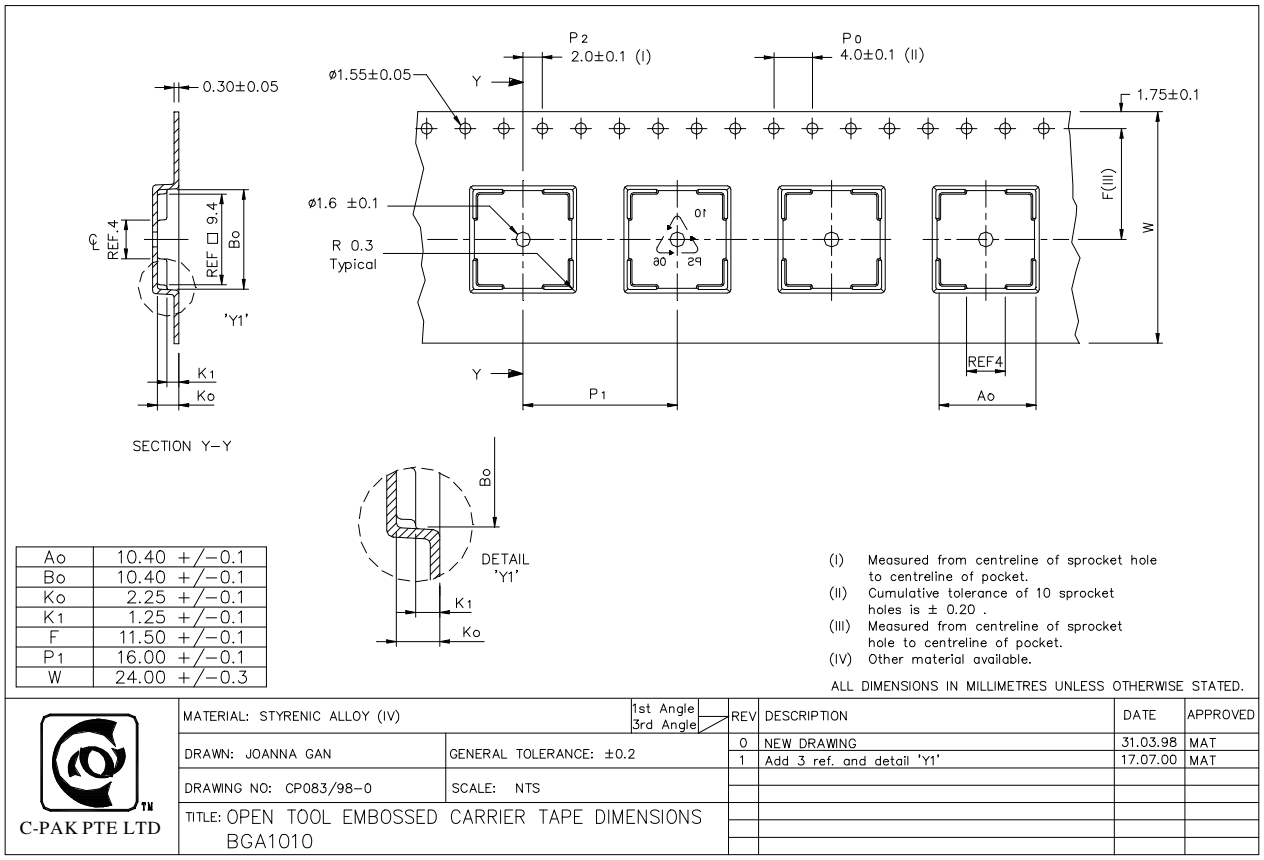

Ao	10.40 +/−0.1
Bo	10.40 +/−0.1
Ko	2.25 +/−0.1
K1	1.25 +/−0.1
F	11.50 +/−0.1
P1	16.00 +/−0.1
W	24.00 +/−0.3

IMPORTANT NOTICE

Texas Instruments Incorporated and its subsidiaries (TI) reserve the right to make corrections, modifications, enhancements, improvements, and other changes to its products and services at any time and to discontinue any product or service without notice. Customers should obtain the latest relevant information before placing orders and should verify that such information is current and complete. All products are sold subject to TI's terms and conditions of sale supplied at the time of order acknowledgment.

TI warrants performance of its hardware products to the specifications applicable at the time of sale in accordance with TI's standard warranty. Testing and other quality control techniques are used to the extent TI deems necessary to support this warranty. Except where mandated by government requirements, testing of all parameters of each product is not necessarily performed.

TI assumes no liability for applications assistance or customer product design. Customers are responsible for their products and applications using TI components. To minimize the risks associated with customer products and applications, customers should provide adequate design and operating safeguards.

TI does not warrant or represent that any license, either express or implied, is granted under any TI patent right, copyright, mask work right, or other TI intellectual property right relating to any combination, machine, or process in which TI products or services are used. Information published by TI regarding third-party products or services does not constitute a license from TI to use such products or services or a warranty or endorsement thereof. Use of such information may require a license from a third party under the patents or other intellectual property of the third party, or a license from TI under the patents or other intellectual property of TI.

Reproduction of TI information in TI data books or data sheets is permissible only if reproduction is without alteration and is accompanied by all associated warranties, conditions, limitations, and notices. Reproduction of this information with alteration is an unfair and deceptive business practice. TI is not responsible or liable for such altered documentation. Information of third parties may be subject to additional restrictions.

Resale of TI products or services with statements different from or beyond the parameters stated by TI for that product or service voids all express and any implied warranties for the associated TI product or service and is an unfair and deceptive business practice. TI is not responsible or liable for any such statements.

TI products are not authorized for use in safety-critical applications (such as life support) where a failure of the TI product would reasonably be expected to cause severe personal injury or death, unless officers of the parties have executed an agreement specifically governing such use. Buyers represent that they have all necessary expertise in the safety and regulatory ramifications of their applications, and acknowledge and agree that they are solely responsible for all legal, regulatory and safety-related requirements concerning their products and any use of TI products in such safety-critical applications, notwithstanding any applications-related information or support that may be provided by TI. Further, Buyers must fully indemnify TI and its representatives against any damages arising out of the use of TI products in such safety-critical applications.

TI products are neither designed nor intended for use in military/aerospace applications or environments unless the TI products are specifically designated by TI as military-grade or "enhanced plastic." Only products designated by TI as military-grade meet military specifications. Buyers acknowledge and agree that any such use of TI products which TI has not designated as military-grade is solely at the Buyer's risk, and that they are solely responsible for compliance with all legal and regulatory requirements in connection with such use.

TI products are neither designed nor intended for use in automotive applications or environments unless the specific TI products are designated by TI as compliant with ISO/TS 16949 requirements. Buyers acknowledge and agree that, if they use any non-designated products in automotive applications, TI will not be responsible for any failure to meet such requirements.

Following are URLs where you can obtain information on other Texas Instruments products and application solutions:

Products		**Applications**	
Audio	www.ti.com/audio	Automotive and Transportation	www.ti.com/automotive
Amplifiers	amplifier.ti.com	Communications and Telecom	www.ti.com/communications
Data Converters	dataconverter.ti.com	Computers and Peripherals	www.ti.com/computers
DLP® Products	www.dlp.com	Consumer Electronics	www.ti.com/consumer-apps
DSP	dsp.ti.com	Energy and Lighting	www.ti.com/energy
Clocks and Timers	www.ti.com/clocks	Industrial	www.ti.com/industrial
Interface	interface.ti.com	Medical	www.ti.com/medical
Logic	logic.ti.com	Security	www.ti.com/security
Power Mgmt	power.ti.com	Space, Avionics and Defense	www.ti.com/space-avionics-defense
Microcontrollers	microcontroller.ti.com	Video and Imaging	www.ti.com/video
RFID	www.ti-rfid.com		
OMAP Mobile Processors	www.ti.com/omap		
Wireless Connectivity	www.ti.com/wirelessconnectivity		

TI E2E Community Home Page e2e.ti.com

Mailing Address: Texas Instruments, Post Office Box 655303, Dallas, Texas 75265
Copyright © 2012, Texas Instruments Incorporated